53RV | SERIES

PANEL MOUNT



Features

- Three-phase Motor Reversing solid-state relay;
- Ratings from 25A and 50A per phase @ 48-530 VAC
- Interlock Circuit Prevents Inadvertent Actuation of Both Directions
- SCR output for heavy industrial loads
- DC control
- LED input status indicator

PRODUCT SELECTION

Control Voltage	25A	50A
4-32 VDC	D53RV25C	D53RV50C

OUTPUT SPECIFICATIONS [1]

Description	D53RV25C	D53RV50C
Operating Voltage (47-63Hz) [Vrms]	48-530	48-530
Maximum Load Current [Arms] [2]	25	50
Transient Overvoltage [Vpk]	1100	1100
Maximum Off-State Leakage Current @ Rated Voltage [mArms] [3]	6	6
Minimum Load Current [Arms]	0.1	0.1
Maximum Surge Current 50/60 Hz (16.6ms) [Apk]	475/500	710/750
1 Second Surge Current 50/60 Hz [Apk]	100	150
Maximum On-State Voltage Drop @ Rated Current [Vpk]	1.35	1.35
Maximum I^2T for Fusing (50/60 Hz, 1/2 cycle) [A^2 sec]	1139/1038	2520/2320
Thermal Resistance Junction to Case (Rjc) [°C/W]	0.26	0.25
Minimum Off-State dv/dt @ Maximum Rated Voltage [V/µsec] [4]	500	500
UL/IEC 60947 Motor Control Ratings at 120V [HP/KW] [5]	0.75/0.56	1.5/1.11
UL/IEC 60947 Motor Control Ratings at 240V [HP/KW] [5]	1/0.74	3/2.22
UL/IEC 60947 Motor Control Ratings at 380V [HP/KW] [5]	2/1.48	5/3.7
UL/IEC 60947 Motor Control Ratings at 480V [HP/KW] [5]	3/2.22	7.5/5.55

Copyright © 2018 Sensata Technologies, Inc.

INPUT SPECIFICATIONS [1]

Description	Parameters
Control Voltage Range	4-32 VDC
Minimum Turn-On Voltage	4.0 VDC
Minimum Turn-Off Voltage	1.0 VDC
Minimum Input Current (for on-state)	23mA
Maximum Input Current	35mA
Input Resistance	15 mA
Maximum Turn-On Time [msec]	Current Regulated
Maximum Turn-Off Time [msec]	100
Interlocking Time [msec]	100

GENERAL SPECIFICATIONS

Description	Parameters
Input to Output Isolation	4000 Vrms
Input/ Output to Ground Isolation	2500 Vrms
Maximum Capacitance, Input/Output	8 pF
Ambient Operating Temperature Range	-40 to 80 °C
Ambient Storage Temperature Range	-40 to 100 °C
Weight (typical)	13.1 oz (370 g)
Housing Material	UL 94V0 (self extinguishing
Terminals	Mounted
Input Terminal Screw Torque Range (in lb/Nm)	16.8/1.9
Output Terminal Screw Torque Range (in lb/Nm)	21.2/2.4

THERMAL DERATE INFORMATION

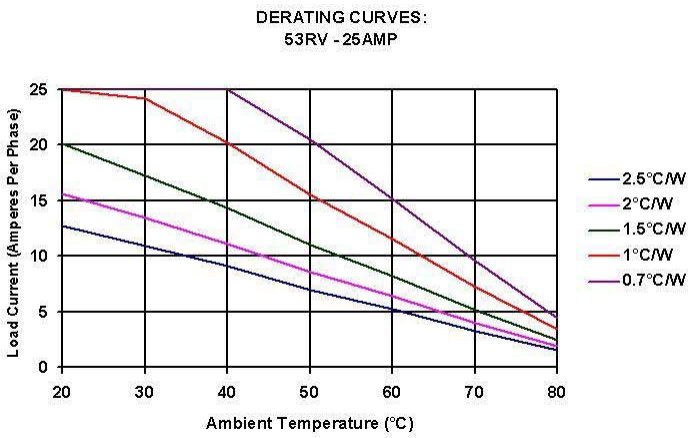

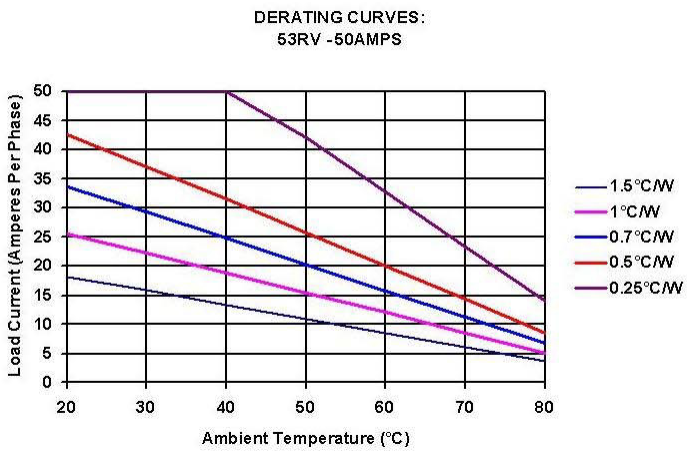

Copyright © 2018 Sensata Technologies, Inc.

MECHANICAL SPECIFICATIONS

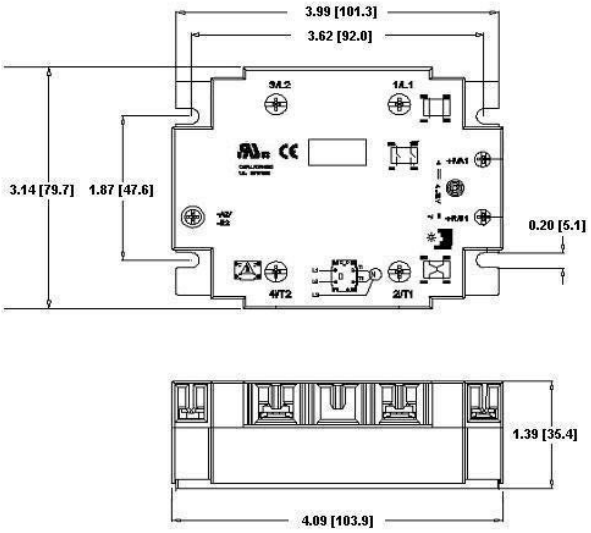

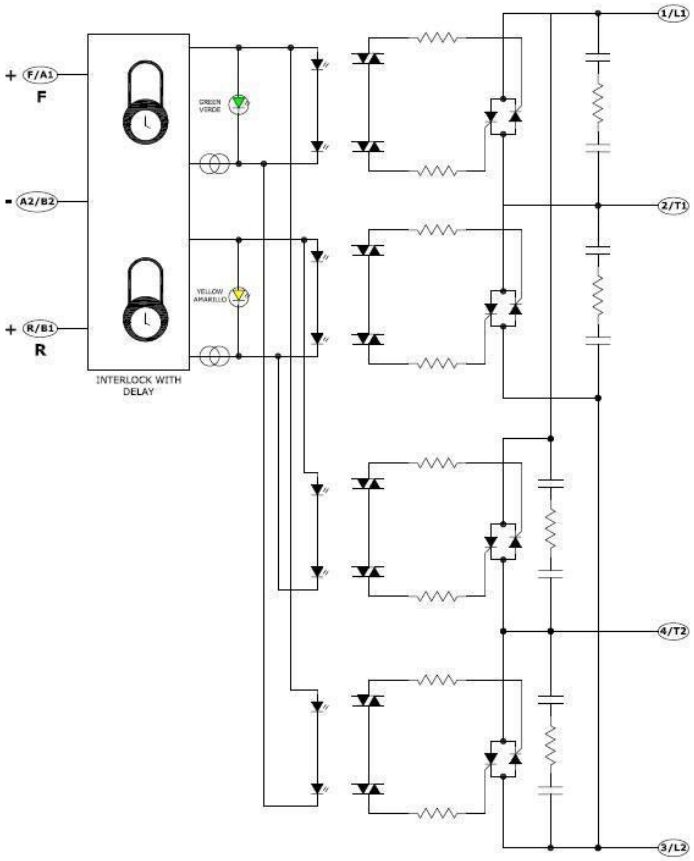

Copyright © 2018 Sensata Technologies, Inc.

AVAILABLE OPTIONS

Example : D53RV25C-H

D	53	RV	25	C	–	H

Control Voltage*

D: 4-32 VDC

Series*

53

Type*

RV: 3 Phase Motor Reversing SSR

Load Current/per phase*

25: 25 Amps
50: 50 Amps

Cover*

C: IP20

Thermal Pad**

Blank: Not Included
H: Included

*Required for valid part number
**For options only and not required for valid part number

Copyright © 2018 Sensata Technologies, Inc.

GENERAL NOTES

(1) ***All parameters at 25°C unless otherwise specified.***
(2) ***When mounted to the proper size heat sink (see derating curves)***
(3) ***Measured between 1/L1 and 2/T1 or 3/L2 and 4/T2***
(4) ***Off-State dv/dt test method per EIA/NARM standard RS-443, paragraph 13.11.1***
(5) ***At 40°C Ambient temperature. Resistive loads only.***

AGENCY APPROVALS & CERTIFICATIONS

Designed in accordance with the requirements of IEC 62314

c UL us E116950 CE RoHS 50

WARNINGS



RISK OF MATERIAL DAMAGE AND HOT ENCLOSURE
- The product's side panels may be hot, allow the product to cool before touching
- Follow proper mounting instructions including torque values
- Do not allow liquids or foreign objects to enter this product

Failure to follow these instructions can result in serious injury, or equipment damage.



HAZARD OF ELECTRIC SHOCK, EXPLOSION OR ARC FLASH
- Disconnect all power before installing or working with this equipment
- Verify all connections and replace all covers before turning on power

Failure to follow these instructions will result in death or serious injury.

Sensata Technologies, Inc. ("Sensata") data sheets are solely intended to assist designers ("Buyers") who are developing systems that incorporate Sensata products (also referred to herein as "components"). Buyer understands and agrees that Buyer remains responsible for using its independent analysis, evaluation and judgment in designing Buyer's systems and products. Sensata data sheets have been created using standard laboratory conditions and engineering practices. Sensata has not conducted any testing other than that specifically described in the published documentation for a particular data sheet. Sensata may make corrections, enhancements, improvements and other changes to its data sheets or components without notice.
Buyers are authorized to use Sensata data sheets with the Sensata component(s) identified in each particular data sheet. HOWEVER, NO OTHER LICENSE, EXPRESS OR IMPLIED, BY ESTOPPEL OR OTHERWISE TO ANY OTHER SENSATA INTELLECTUAL PROPERTY RIGHT, AND NO LICENSE TO ANY THIRD PARTY TECHNOLOGY OR INTELLECTUAL PROPERTY RIGHT, IS GRANTED HEREIN. SENSATA DATA SHEETS ARE PROVIDED "AS IS". SENSATA MAKES NO WARRANTIES OR REPRESENTATIONS WITH REGARD TO THE DATA SHEETS OR USE OF THE DATA SHEETS, EXPRESS, IMPLIED OR STATUTORY, INCLUDING ACCURACY OR COMPLETENESS. SENSATA DISCLAIMS ANY WARRANTY OF TITLE AND ANY IMPLIED WARRANTIES OF MERCHANTABILITY, FITNESS FOR A PARTICULAR PURPOSE, QUIET ENJOYMENT, QUIET POSSESSION, AND NON-INFRINGEMENT OF ANY THIRD PARTY INTELLECTUAL PROPERTY RIGHTS WITH REGARD TO SENSATA DATA SHEETS OR USE THEREOF.
All products are sold subject to Sensata's terms and conditions of sale supplied at www.sensata.com SENSATA ASSUMES NO LIABILITY FOR APPLICATIONS ASSISTANCE OR THE DESIGN OF BUYERS' PRODUCTS. BUYER ACKNOWLEDGES AND AGREES THAT IT IS SOLELY RESPONSIBLE FOR COMPLIANCE WITH ALL LEGAL, REGULATORY AND SAFETY-RELATED REQUIREMENTS CONCERNING ITS PRODUCTS, AND ANY USE OF SENSATA COMPONENTS IN ITS APPLICATIONS, NOTWITHSTANDING ANY APPLICATIONS-RELATED INFORMATION OR SUPPORT THAT MAY BE PROVIDED BY SENSATA.
Mailing Address: Sensata Technologies, Inc., 529 Pleasant Street, Attleboro, MA 02703, USA.

Copyright © 2018 Sensata Technologies, Inc.

Rev. 03/29/18 ECN 20395 FDE-07-01 Rev. B

CONTACT US

Americas
+1 (877) 502 5500
sales.crydom@sensata.com
Europe, Middle East & Africa
+44 (1202) 416170
ssr-info.eu@sensata.com
Asia Pacific
sales.isasia@list.sensata.com
China +86 (21) 2306 1500
Japan +81 (45) 277 7117
Korea +82 (31) 601 2004
India +91 (80) 67920890
Rest of Asia +886 (2) 27602006 ext 2808