

GNR 90mm Series

- Current rating: 25 amps
- Output voltage rating: 48-600 VAC
- Direct Bond Copper (DBC) Substrate
- LED input status indicator
- UL 508 Endurance Rating for Enhaced Reliability
- UL/CSA Approved, CE Compliant
- Built-in overvoltage protection
- DIN Rail or Panel Mount
- Zero voltage or Instantaneous turn-on output

PRODUCT SELECTION

Control Voltage	Zero-Crossing	Random Turn-on
4-32 VDC	GNR25DCZ	GNR25DCR
90-140 VAC	GNR25BCZ	
180-280 VAC	GNR25ACZ	

OUTPUT SPECIFICATIONS (1)

Description	GNR25
Operating Voltage (47-440Hz) [Vrms]	48-600
Transient Overvoltage [Vpk, t=1 min.]	1100
Maximum Load Current [Arms]	25
Minimum Load Current [Arms]	0.1
Maximum Off-State Leakage Current @ Rated Voltage [mArms]	0.25
Static Off-State dv/dt (V/µsec, Ta=25°C) (2)	500
1 Second Surge Current (Apk Ta=25°C) 50/60 Hz	130
Forward Voltage Drop (Vpk @ max, Ta=25°C)	1.50
Maximum Surge Current (50/60 Hz, 1 cycle) [Apk]	286/300
Maximum I^2t for Fusing (50/60Hz, 1/2 cycle) [A^2 sec]	410/374
HP Ratings at 240V / FLA [Arms]	1/4.2
HP Ratings at 380V / FLA [Arms]	2/4.3
HP Ratings at 480V / FLA [Arms]	3/4.8
Min/Max stranded wire	16/8 AWG
Min/Max solid wire	16/10 AWG

INPUT SPECIFICATIONS (1)

Description	GNR25DCX	GNR25BCZ	GNR25ACZ
Control Voltage Range (3)	4.0-32 VDC	90-140 Vrms	180-280 Vrms
Minimum Turn-On Voltage	4.0 VDC	90 Vrms	180 Vrms
Must Turn-Off Voltage	1.0 VDC	10 Vrms	10 Vrms
Minimum Input Current (for on-state)	22 mA	15 mArms	19 mA
Maximum Input Current	28 mA	19 mArms	24 mA
Input Resistance	Current Regulated	Current Regulated	Current Regulated
Maximum Turn-Off Time [msec]	1/2 Cycle	20	20
Maximum Turn-On Time [msec] (4)	1/2 Cycle	30	30
Min/Max stranded/solid wire	24/16 AWG	24/16 AWG	24/16 AWG

Do not forget to visit us at: *www.crydom.com*
Copyright © 2020 Crydom Inc. Specifications subject to change without notice.

Sensata Technologies

GENERAL SPECIFICATIONS (1)

Description	Parameters
Ambient Operating Temperature Range (3)	-20 to 80°C
Ambient Storage Temperature Range	-40 to 100 °C
Dielectric Strength, Input to Output (50/60Hz)	4000 Vrms
Dielectric Strength, Input/Output to Ground (50/60Hz)	2500 Vrms
Maximum Capacitance, Input/Output	8 pF
Housing Material	UL 94V0 (self extinguishing)
Input Status Indicator	Green LED
Weight (typical)	21.17 oz (600g)
Recommended Terminal Screw Torque Range:	5.0-6.0 in-lb (0.6-0.7 Nm)

GENERAL NOTES

(1) All parameters at 25°C unless otherwise specified.
(2) Off-State dv/dt test method per EIA/NARM standard RS-443, paragraph 13.11.1
(3) For 180-280 VAC Control. Maximum Ambient operating temperatures is 60°C.
(4) Turn-on time for Instantaneous version (R suffix) is 0.1 msec (for DC control only).

For additional information or specific questions, contact Crydom Technical Support.

MECHANICAL SPECIFICATIONS (1)

Tolerances: ±0.02 in / 0.5 mm
All dimensions are in: inches [millimeters]

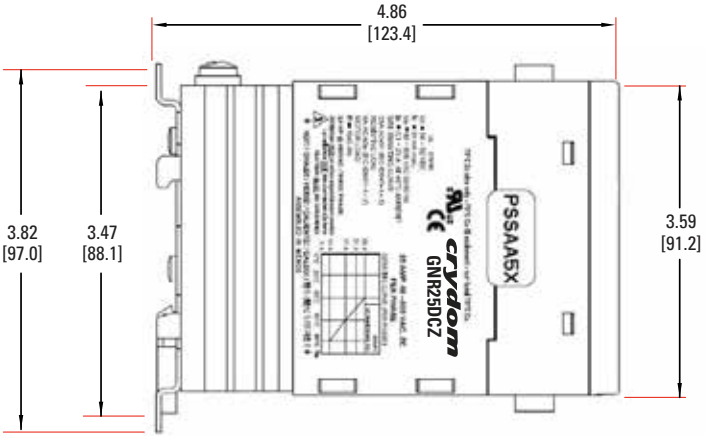

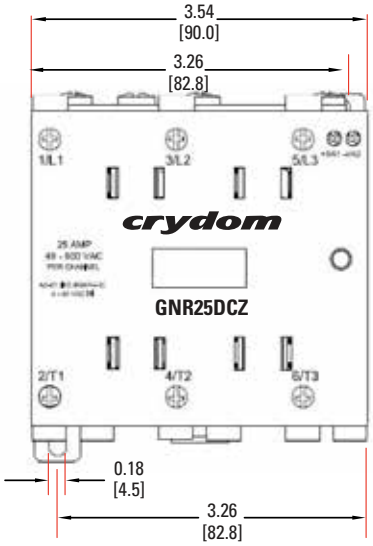

Copyright © 2020 Crydom Inc. Specifications subject to change without notice.
Sensata Technologies

WIRING DIAGRAM

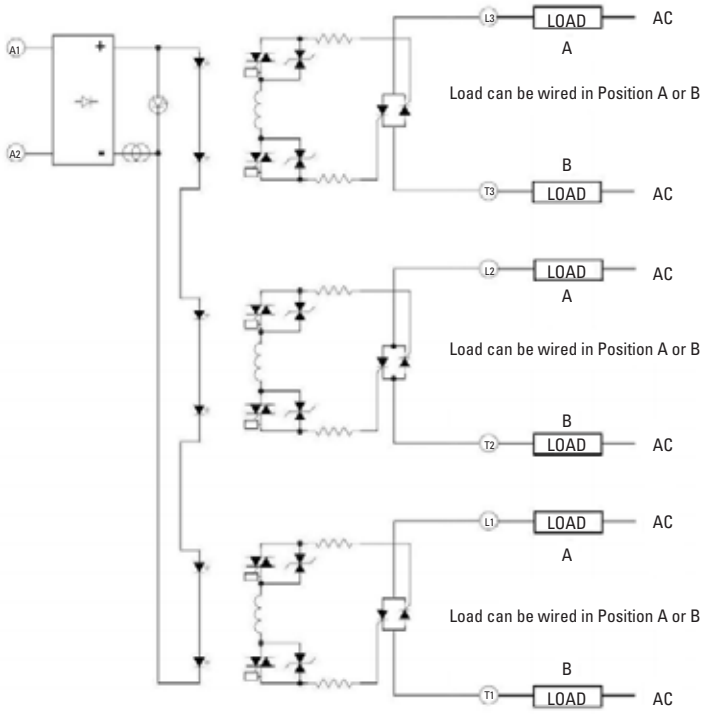

THERMAL DERATE INFORMATION

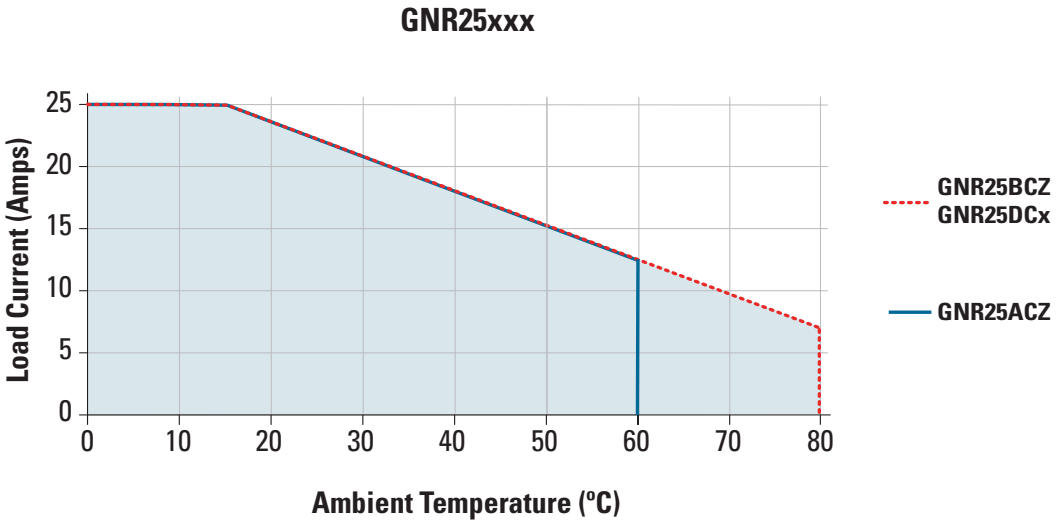

Copyright © 2020 Crydom Inc. Specifications subject to change without notice.
Sensata Technologies

AGENCY APPROVALS

Designed in accordance with the requirements of IEC 62314

c UL us E79183 LR 38595 CE RoHS

EMC Compatibility

Designed in accordance with the requirements of IEC 62314
IEC 62314
IEC 60068-2-6 35mm/10-55Hz
IEC 60068-2-27 15G / 11ms
IEC 61000-4-2 Level 3 Electrostatic Discharge
IEC 61000-4-3 Level 3 Radiated Electromagnetic Noise
IEC 61000-4-4 Level 3 Immunity to Electrically Fast Transients
IEC 61000-4-5 Level 3 Immunity to Electrical Surges
IEC 61000-4-6 Level 3 Conducted Electromagnetic Noise
CISPR 11 Class A Conducted and Radiated Noise for Industrial Environments

Rev. 113020
ECN 21025

Copyright © 2020 Crydom Inc. Specifications subject to change without notice.

⚠ DANGER / PELIGRO / DANGER /GEFAHR / PERICOLO / 危险

HAZARD OF ELECTRIC SHOCK, EXPLOSION, OR ARC FLASH. • Disconnect all power before installing or working with this equipment. • Verify all connections and replace all covers before turning on power. **Failure to follow these instructions will result in death or serious injury.**	**RIESGO DE DESCARGA ELECTRICA O EXPLOSION.** • Desconectar todos los suministros de energia a este equipo antes de trabajar con este equipo. • Verificar todas las conexiones y colocar todas las tapas antes de energizer el equipo. **El incumplimiento de estas instrucciones puede provocar la muerte o lesiones serias.**	**RISQUE DE DESCHARGE ELECTRIQUE OU EXPLOSION** • Eteindre toutes les sources d'énergie de cet appareil avant de travailler dessus de cet appareil • Vérifier tous connections, et remettre tous couverts en olace avant de mettre sous **De non-suivi de ces instructions provoquera la mort ou des lésions sérieuses sérieuses.**	**GEFAHR EINES ELEKTRISCHE N SCHLAGES ODER EINER EXPLOSION.** • Stellen Sie jeglichen Strom ab, der dieses Gerät versorgt, bevor Sie an dem Gerät Arbeiten durchführen • Vor dem Drehen auf Energie alle Anschlüsse überprüfen und alle Abdeckungen ersetzen. **Unterlassung dieser Anweisungen können zum Tode oder zu schweren Verletzungen führen.**	**RISCHIO DI SCOSSA ELETTRICA O DELL'ESPLOSIONE.** • Spenga tutta l'alimentazione che fornisce questa apparecchiatura prima di lavorare a questa apparecchiatura • Verificare tutti i collegamenti e sostituire tutte le coperture prima dell'accensione **L'omissione di queste istruzioni provocherà la morte o lesioni serie**	**存在电击、爆炸或电弧闪烁危险** • 在操作此设备之前请先关闭电源。 **若不遵守这些说明，可能会导致严重的人身伤害甚至死亡。**

⚠ WARNING / AVERTISSEMENT / WARNUNG /ADVERTENCIA / AVVERTENZA / 警告

RISK OF MATERIAL DAMAGE AND HOT ENCLOSURE • The product's side panels may be hot, allow the product to cool before touching. • Follow proper mounting instructions including torque values. • Do not allow liquids or foreign objects to enter this product. **Failure to follow these instructions can result in serious injury, or equipment damage.**	**RISQUE DE DOMMAGE MATERIEL ET DE SURCHAUFFE DU BOITIER** • Les panneaux latéraux du produit peuvent être chauds. Laisser le produit refroidir avant de le toucher. • Respecter les consignes de montage, et notamment les couples de serrage. • Ne pas laisser pénétrer de liquide ni de corps étrangers à l'intérieur du produit. **Le non-respect de cette directive peut entraîner, des lésions corporelles graves ou des dommages matériels.**	**GEFAHR VON MATERIALSCHÄDEN UND GEHÄUSEERHITZUNG** • Die Seitenwände können heiß sein. Lassen Sie das Produkt abkühlen, bevor Sie es berühren. • Beachten Sie die Montageanweisungen, • Führen Sie keine Flüssigkeiten oder Fremdkörper in das Produkt ein. **Die Nichtbeachtung dieser Anweisung kann Körperverletzung oder Materialschäden zur Folge haben.**
RIESGO DE DAÑOS MATERIALES Y DE SOBRECALENTAMIENTO DE LA UNIDAD • Los paneles laterales del producto pueden estar calientes. Esperar que el producto se enfríe antes de tocarlo. • Respetar las instrucciones de montaje, y en particular los pares de apretado. • No dejar que penetren líquidos o cuerpos extraños en el producto. **Si no se respetan estas precauciones pueden producirse graves lesiones, daños materiales.**	**RISCHIO DI DANNI MATERIALI E D'INVOLUCRO CALDO** • I pannelli laterali dell'apparecchio possono scottare; lasciar quindi raffreddare il prodotto prima di toccarlo. • Seguire le istruzioni di montaggio corrette. • Non far entrare liquidi o oggetti estranei in questo apparecchio. **La mancata osservanza di questa precauzione può causare gravi rischi per l'incolumità personale o danni alle apparecchiature.**	**材料损坏和高温外壳的危险性** • 产品的一侧面板可能很热，在其冷却前请不要触碰。 • 遵照正确的安装说明，包括扭矩值。 • 请勿让液体及其他异物进入本产品。 **如不能正确执行这些操作说明，极有可能造成严重人体伤害或者设备的损坏。**

Copyright © 2020 Crydom Inc. Specifications subject to change without notice.

Sensata Technologies

ANNEX - ENVIROMENTAL INFORMATION

The environmental information disclosed in this annex including the EIP Pollution logo are in compliance with People's Republic of China Electronic Industry Standard SJ/T11364 – 2006, Marking for Control of Pollution Caused by Electronic Information Products.

Part Name	Toxic or hazardous Substance and Elements					
	Lead (Pb)	Mercury (Hg)	Cadmium (Cd)	Hexavalent Chromium (Cr (VI))	Polybrominated biphenyls (PBB)	Polybrominated diphenyl ethers (PBDE)
Semiconductor die	X	O	O	O	O	O
Solder	X	O	O	O	O	O

附件 - 环保信息

此附件所标示的包括电子信息产品污染图标的环保信息符合中华人民共和国电子行业标准 SJ/T11364 - 2006, 电子信息产品污染控制标识要求。

部件名称	有毒有害物质或元素					
	铅 (Pb)	汞 (Hg)	镉 (Cd)	六价铬 (Cr (VI))	多溴联苯 (PBB)	多溴二苯醚 (PBDE)
半导体芯片	X	O	O	O	O	O
焊接点	X	O	O	O	O	O



Copyright © 2020 Crydom Inc. Specifications subject to change without notice.

Datasheets provided by Sensata Technologies, Inc., its subsidiaries and/or affiliates ("Sensata") are solely intended to assist third parties ("Buyers") who are developing systems that incorporate Sensata products (also referred to herein as "components"). Buyer understands and agrees that Buyer remains responsible for using its independent analysis, valuation, and judgment in designing Buyer's systems and products. Sensata datasheets have been created using standard laboratory conditions and engineering practices. Sensata has not conducted any testing other than that specifically described in the published documentation for a particular datasheet. Sensata may make corrections, enhancements, improvements, and other changes to its datasheets or components without notice.

Buyers are authorized to use Sensata datasheets with the Sensata component(s) identified in each particular datasheet. HOWEVER, NO OTHER LICENSE, EXPRESS OR IMPLIED, BY ESTOPPEL OR OTHERWISE TO ANY OTHER SENSATA INTELLECTUAL PROPERTY RIGHT, AND NO LICENSE TO ANY THIRD PARTY TECHNOLOGY OR INTELLECTUAL PROPERTY RIGHT, IS GRANTED HEREIN. SENSATA DATASHEETS ARE PROVIDED "AS IS". SENSATA MAKES NO WARRANTIES OR REPRESENTATIONS WITH REGARD TO THE DATASHEETS OR USE OF THE DATASHEETS, EXPRESS, IMPLIED, OR STATUTORY, INCLUDING ACCURACY OR COMPLETENESS. SENSATA DISCLAIMS ANY WARRANTY OF TITLE AND ANY IMPLIED WARRANTIES OF MERCHANTABILITY, FITNESS FOR A PARTICULAR PURPOSE, QUIET ENJOYMENT, QUIET POSSESSION, AND NON-INFRINGEMENT OF ANY THIRD PARTY INTELLECTUAL PROPERTY RIGHTS WITH REGARD TO SENSATA DATASHEETS OR USE THEREOF.

All products are sold subject to Sensata's terms and conditions of sale supplied at www.sensata.com. SENSATA ASSUMES NO LIABILITY FOR APPLICATIONS ASSISTANCE OR THE DESIGN OF BUYERS' PRODUCTS. BUYER ACKNOWLEDGES AND AGREES THAT IT IS SOLELY RESPONSIBLE FOR COMPLIANCE WITH ALL LEGAL, REGULATORY, AND SAFETY-RELATED REQUIREMENTS CONCERNING ITS PRODUCTS, AND ANY USE OF SENSATA COMPONENTS IN ITS APPLICATIONS, NOTWITHSTANDING ANY APPLICATIONS-RELATED INFORMATION OR SUPPORT THAT MAY BE PROVIDED BY SENSATA.

Mailing Address: Sensata Technologies, Inc., 529 Pleasant Street, Attleboro, MA 02703, USA

CONTACT US

Regional head offices:

United States of America
Sensata Technologies
Attleboro, MA
Phone: 508-236-3800
E-mail: support@sensata.com

Netherlands
Sensata Technologies Holland B.V.
Hengelo
Phone: +31 74 357 8000
E-mail: support@sensata.com

China
Sensata Technologies China Co., Ltd.
Shanghai
Phone: +8621 2306 1500
E-mail: support@sensata.com

Copyright © 2023 Sensata Technologies, Inc.