HS Series

crydom®

Heat Sinks & SSR Assemblies



The Global Expert in Solid State Switching Technology

Sensata Technologies

crydom

Crydom, **global expert in solid state switching technology**, combines technology and innovation to provide customers a wide range of standard **Solid State Relays and Solid State Contactors,** and specializes in custom designed solid state switching solutions for any load control application. Crydom is a brand of Sensata Technologies.

www.crydom.com

Sensata Technologies

Sensata Technologies is one of the **world's leading suppliers** of sensing, electrical protection, control and power management solutions with operations and business centers in 16 countries. Sensata's products improve safety, efficiency and comfort for millions of people every day in automotive, appliance, aircraft, industrial, military, heavy vehicle, heating, air-conditioning and ventilation, data, telecommunications, recreational vehicle and marine applications.

For more information please visit Sensata's website at:

www.sensata.com

About this catalog...

To facilitate the use of this catalog, products have been categorized into 3 product groups: Heat Sinks, Assemblies, and Accessories.

The following conditions are applicable to product families where specifically noted:

A All dimensions in drawings are in inches [millimeters] and are for reference only.

B Dimensional drawings shown are for illustrative purposes only. They do not represent the complete variety of products within each series. For complete dimensional drawings for a particular Crydom product visit the CAD Drawings section in the Crydom website.

C Part Number Nomenclature is color coded as follows:
- Required for valid part number
- For options only and not required for valid part number

D Heat sink includes the necessary hardware to mount the relay(s) onto the heat sink. The number of hardware kits (HK1 or HKM1) included depends upon the number and type of SSRs possible to install on each heat sink.

E HSxxDR components are pre-installed at the factory prior to shipment.

F Not all part number combinations are available. Contact Crydom Sales Support for information on the availability of a specific part number.

G Safety agency approvals for SSR/Heat Sink Assemblies may vary depending of selected SSR. Heat sinks do not require safety agency approval.

H The standard Crydom SSR/Heat Sink Assemblies are either DIN Rail or Panel Mounted depending upon model selected and are available with either one, two or three pre-installed single, dual or 3 phase SSR.

I Output current specification is total combined load current for all conducting channels.



Heat Sinks
Page 4



Assemblies
Page 22



Accessories
Page 35

Crydom HS Series Heat Sinks

Thermal Management is of prime importance in the application and use of Panel Mount Solid State Relays due to their internal power dissipation of approximately 1.0 to 1.5 watt/amp of switched load current. Crydom's **HS Series** of heat sinks, designed with "state of the art" thermal design software, offers optimized thermal performance, size and cost for a variety of single, dual and three phase Solid State Relay applications.

Designed to accept industry standard SSRs, the HS series includes heat sinks with ratings from 5 °C per watt to 0.25 °C per watt which are suitable for combined loads from 10 Amps to 100 Amps. With models accepting one, two or three SSRs, **the HS series heat sinks can be either panel mounted or DIN rail mounted** when combined with optional DIN rail mounting bracket kits.

Crydom also offers a variety of accessories which make it easier for the user to select, configure and install SSRs and heat sinks for your application including Thermal Interface pads, clear touch safe SSR covers, SSR mounting hardware and Heat Sink mounting hardware including DIN rail brackets.

For more information on Heat Sink selection and available calculation tools from Crydom go to **www.crydom.com/en/HSseries.**

See notes: C F

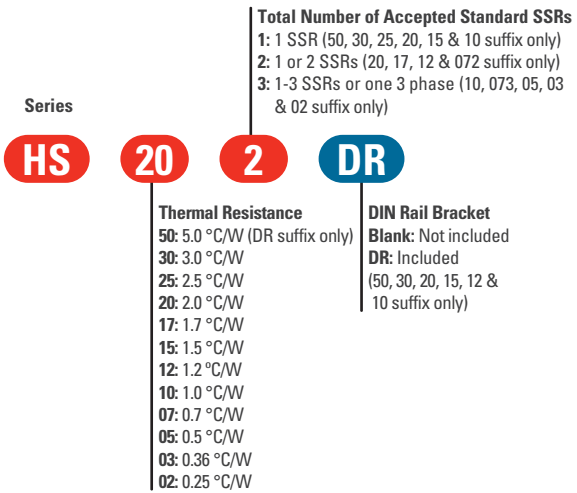

Specifications are subject to change without prior notice

Heat Sink Selection

Why Heat Sinks are required for reliable Solid State Relay operation?

Heat Sinks are required to insure the proper operation and long term reliability of Solid State Relays because they provide a means to dissipate the power that is normally developed internally in the SSR into the surrounding ambient air and maintain a safe operating temperature.

All SSRs in their conduction state create thermal energy in the output semiconductor at the rate of approximately 1 to 1.5 watts per ampere of load current for AC output SSRs, and 0.2 to 1.5 watts per ampere of load current for DC output SSRs depending upon their design. This power dissipation raises the Solid State Relay's operating temperature above the surrounding ambient.

Solid State Relays can operate reliably without heat sinks up to approximately 5 Amps of load current depending upon model, duty cycle and ambient temperature. Free air ratings of traditional panel mount SSRs may be as high as 8 to 10 Amps, but this rating relies on the SSRs exposed metal base plate acting as a heat sink, meaning that it must be exposed to ambient air.

Heat Sinks are made of high thermal conductive material such as aluminum. Not only is aluminum's thermal conductivity high, its cost is relatively low. Although other materials such as steel may provide a limited measure of heat sinking, thermal conductivity of these materials are relatively low compared to aluminum and therefore far less effective as a **Heat Sink.** Coatings also tend to diminish the thermal dissipation effectiveness of most materials and except anodizing, should be avoided.

Heat Sink performance is rated by **thermal impedance,** measured in °C per watt (°C/W) (thermal impedance is the inverse of thermal conductivity). Thermal impedance represents the resistance to the transfer of thermal energy, therefore lower numerical thermal impedance ratings mean more efficient heat transfer.

Thermal Impedance ratings of **Heat Sinks** are based upon natural convection air flow. To achieve this performance, the **Heat Sink** must be oriented such that air flow over its finned surface is maximized. Generally this means the fins should be oriented vertically.

Significant improvement in **Heat Sink** performance can be achieved by providing forced air flow over the **Heat Sink's** surface area. Fans delivering relatively small volumes of air can reduce the Heat Sink's thermal impedance substantially, thereby improving its efficiency and consequently the SSRs reliability.

Selecting a Heat Sink for a given Solid State Relay Application

Crydom offers technical assistance selecting a heat sink for any given SSR application through its Applications Engineering Department and on its website. Available "White Papers" and a selection "tool" to calculate a heat sink rating based upon load current and ambient temperature are available at **www.crydom.com.**

How to calculate and select a Heat Sink for a given Solid State Relay application

The basic structure of a Solid State Relay includes an internal power semiconductor mounted to an electrical insulator which in turn is mounted to the Solid State Relay's base plate. To form an assembly, the SSR with an accompanying thermal interface material placed on its base plate is then torque mounted to the **Heat Sink.**

The thermal model representing the above configuration includes the following elements:

- **A** The selected SSR with specified thermal impedance ($R_{\theta ssr}$), forward voltage drop (V_f), and maximum allowed internal operating temperature (T_j).
- **B** The thermal interface material placed between the SSR and the **Heat Sink** and its specified thermal impedance ($R_{\theta tp}$).
- **C** The calculated minimum **Heat Sink** thermal impedance rating ($R_{\theta hs}$) required for proper SSR operation.
- **D** The operating environment's max ambient air temperature in °C (T_A).

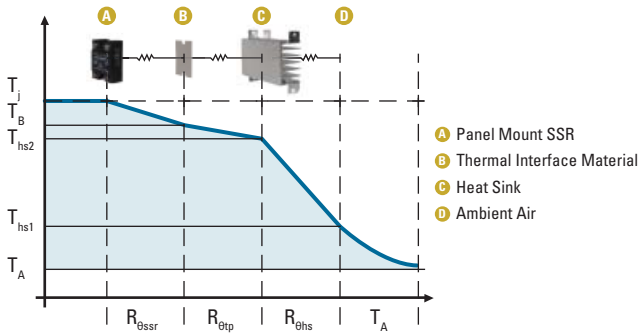

Solid State Relay - Heat Sink Assembly Thermal Model

To determine the minimum Heat Sink rating ($R_{\theta hs}$) required for a particular application, the SSRs internal power dissipation must first be calculated. The power developed in the SSR will be the product of the actual load current in Amp times the SSRs specified on state voltage drop at that current ($P_d = I_f \times V_f$). Note: Manufacturers generally specify 'maximum forward voltage drop' in their data sheets. Typical voltage drops are often much lower.

For this example, assume that a 25 Amps AC output SSR is selected to switch an AC load current of 18 Amps with forward voltage drop specified to be 1.25 volts. Therefore the power generated in the SSR is 18 Amps times 1.25 volts = 22.5 watts.

Next, determine the Solid State Relay's specified thermal impedance and allowed maximum internal temperature (if the max internal temperature is not specified by the manufacturer, assume 125 °C as this is a common value for many AC power semiconductors). For this example, assume $R_{\theta ssr}$ of 0.3 °C/W and T_j of 125 °C.

The next step is to determine the maximum operating ambient temperature (T_A) in °C that the SSR will be expected to operate in its application. The ambient value should be the ambient air temperature of the local environment such as the interior of a control cabinet where the SSR and Heat Sink are to be mounted. In this example, assume T_A of 55 °C.

Finally, the thermal impedance of the interface material ($R_{\theta tp}$) must be determined. These materials will vary from 0.02 to 0.1 °C per watt depending upon the type and thickness selected. For this example, assume that the thermal impedance of the selected interface material $R_{\theta tp}$ is 0.05 °C/W.

The first calculation is to determine the temperature span (Δt) that the SSRs power must be dissipated into in order to maintain its proper operation. This will be the difference between the SSRs maximum allowed internal temperature and the local ambient temperature. $\Delta t = T_j$ max $- T_A$. In this example the result would be: $\Delta t = 125 - 55 = 70$ °C.

The maximum allowed temperature rise noted above, Δt, must then be less than or equal to the combined sum of temperature rises across the three impedances times the power being developed in the SSR. $\Delta t < (R_{\theta ssr} + R_{\theta tp} + R_{\theta hs})$ times P_d. For this example it would be $70 < (0.3 + 0.05 + R_{\theta hs}) \times 22.5$. Therefore the Heat Sink thermal impedance is $R_{\theta hs} < (\Delta t / P_d) - (R_{\theta ssr} + R_{\theta tp})$ or $70/22.5 - 0.35$, equaling 2.76 °C/W.

Therefore in this example, a 2.75 °C/W or larger (lower numerical value) Heat Sink should be used with the Solid State Relay in the application as described above.

HS501DR • 5.0 °C/W



- 5.0°C/W Thermal resistance
- Suitable for 1 single or dual SSR
- DIN rail mountable

Notes: A B D G


Covers


Hardware Kits


Lug Terminals


Thermal Pads

Size w/o bracket (W x L x H) [in]	1.75 x 3.15 x 0.60
Size w/o bracket (W x L x H) [mm]	44.5 x 80 x 15.3
Surface area [square inches / square cm]	19 / 122
Heat sink material	Steel
Heat sink surface finish	Clear zinc plating
Weight w/o DIN bracket [lb / gr]	0.12 / 52
SSR mounting holes	Two M4
Screw torque [in lb / N m]	15 to 20 / 1.7 to 2.2
Accepts fan(s) / qty & size [mm]	No

HS501DR includes

1. DIN Rail Mounting Bracket
2. M4 Mounting Screws
3. Latch Release

HS501DR

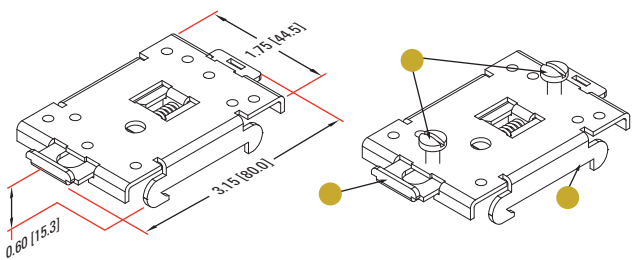

HS301, HS301DR • 3.0 °C/W



- 3.0°C/W Thermal resistance
- Suitable for 1 single or dual SSR
- DIN rail or panel mountable versions available

Notes: A B D E G



Size w/o bracket (W x L x H) [in]	1.78 x 3.20 x 1.58
Size w/o bracket (W x L x H) [mm]	45.2 x 81 x 40.1
Surface area [square inches / square cm]	59 / 381
Heat sink material	Aluminum
Heat sink surface finish	Black anodized
Weight w/o DIN bracket [lb / gr]	0.40 / 178
SSR mounting holes	Two 8 x 32
Screw torque [in lb / N m]	15 to 20 / 1.7 to 2.2
Accepts fan(s) / qty & size [mm]	Yes / one 40

HS301

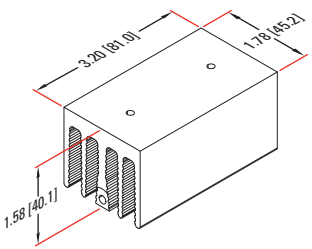

HS301DR

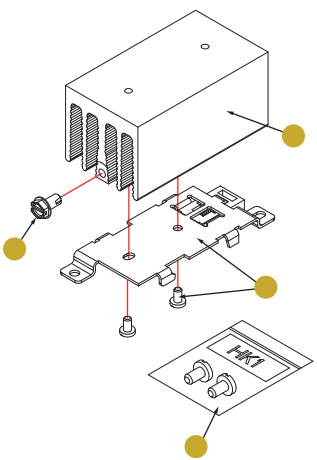

HS301DR includes

1. Ground screw (10-32 x 3/8 in)
2. DIN Rail Kit (DRK1)
3. Heat Sink (HS301)
4. One Hardware Kit 1 (HK1)

Specifications are subject to change without prior notice

HS251 • 2.5 °C/W



- 2.5°C/W Thermal resistance
- Suitable for 1 single or dual SSR
- Panel mountable

Notes: A B D G


Covers


Hardware Kits


Lug Terminals


Thermal Pads

Size w/o bracket (W x L x H) [in]	2.31 x 1.98 x 1.51
Size w/o bracket (W x L x H) [mm]	58.7 x 50.3 x 38.4
Surface area [square inches / square cm]	52.1 / 336
Heat sink material	Aluminum
Heat sink surface finish	Natural aluminum
Weight w/o DIN bracket [lb / gr]	0.22 / 99
SSR mounting holes	Two 8 x 32
Screw torque [in lb / N m]	15 to 20 / 1.7 to 2.2
Accepts fan(s) / qty & size [mm]	No

HS251

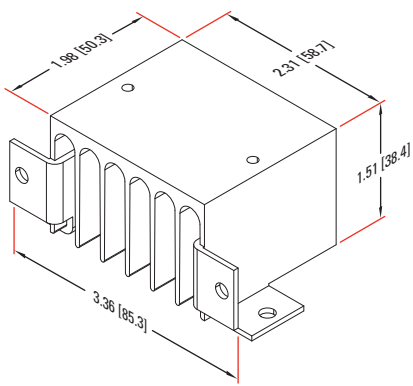

HS202, HS202DR • 2.0 °C/W



- 2.0°C/W Thermal resistance
- Suitable for 1 or 2 single or dual SSR
- DIN rail or panel mountable versions available

Notes: A B D E G


Covers


DIN Rail Bracket


Hardware Kits


Lug Terminals


Thermal Pads

Size w/o bracket (W x L x H) [in]	3.55 x 3.20 x 1.58
Size w/o bracket (W x L x H) [mm]	90.2 x 81.3 x 40.1
Surface area [square inches / square cm]	106.7 / 688
Heat sink material	Aluminum
Heat sink surface finish	Black anodized
Weight w/o DIN bracket [lb / gr]	0.70 / 319
SSR mounting holes	Six 8 x 32
Screw torque [in lb / N m]	15 to 20 / 1.7 to 2.2
Accepts fan(s) / qty & size [mm]	Yes / one or two 40

HS202DR includes

1. Ground screw (10-32 x 3/8 in)
2. DIN Rail Kit (DRK1)
3. Heat Sink (HS202)
4. Two Hardware Kits 1 (HK1)

HS202

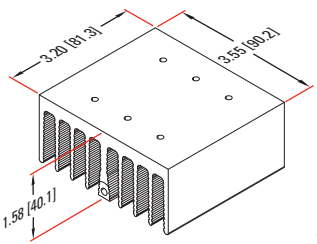

HS202DR

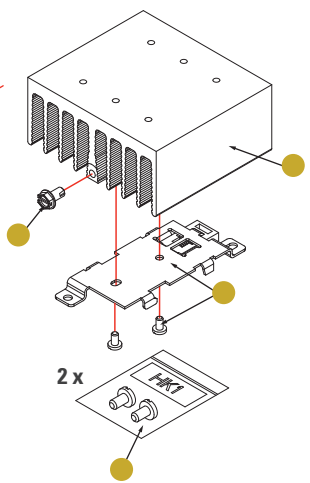

Specifications are subject to change without prior notice

HS201, HS201DR • 2.0 °C/W



- 2.0°C/W Thermal resistance
- Suitable for 1 single or dual SSR
- DIN rail or panel mountable versions available

Notes: A B D E G


Covers


DIN Rail Bracket


Hardware Kits


Lug Terminals


Thermal Pads

Size w/o bracket (W x L x H) [in]	1.78 x 3.20 x 3.15
Size w/o bracket (W x L x H) [mm]	45.2 x 81.3 x 80
Surface area [square inches / square cm]	116.3 / 750
Heat sink material	Aluminum
Heat sink surface finish	Black anodized
Weight w/o DIN bracket [lb / gr]	0.71 / 322
SSR mounting holes	Two 8 x 32
Screw torque [in lb / N m]	15 to 20 / 1.7 to 2.2
Accepts fan(s) / qty & size [mm]	Yes / one or two 40

HS201

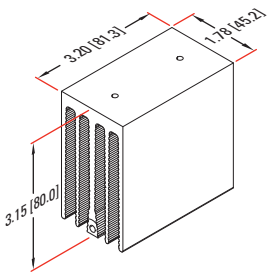

HS201DR

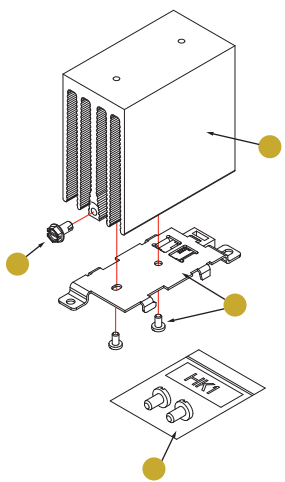

HS201DR includes

1. Ground screw (10-32 x 3/8 in)
2. DIN Rail Kit (DRK1)
3. Heat Sink (HS201)
4. One Hardware Kit 1 (HK1)

HS172 • 1.7 °C/W



- 1.7°C/W Thermal resistance
- Suitable for 1 or 2 single or dual SSRs
- Panel mountable

Notes: A B D G


Covers


Hardware Kits


Lug Terminals


Thermal Pads

Size w/o bracket (W x L x H) [in]	2.31 x 3.95 x 1.51
Size w/o bracket (W x L x H) [mm]	58.7 x 100.3 x 38.4
Surface area [square inches / square cm]	102.2 / 659
Heat sink material	Aluminum
Heat sink surface finish	Natural aluminum
Weight w/o DIN bracket [lb / gr]	0.43 / 196
SSR mounting holes	Six 8 x 32
Screw torque [in lb / N m]	15 to 20 / 1.7 to 2.2
Accepts fan(s) / qty & size [mm]	No

HS172

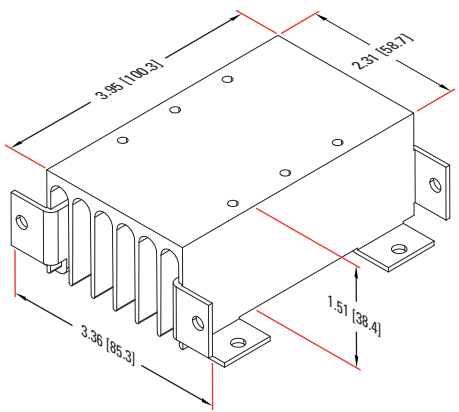

Specifications are subject to change without prior notice

HS151, HS151DR • 1.5 °C/W



- 1.5°C/W Thermal resistance
- Suitable for 1 single or dual SSR
- DIN rail or panel mountable versions available

Notes: A B D E G


Covers


DIN Rail Bracket


Hardware Kits


Lug Terminals


Thermal Pads

Size w/o bracket (W x L x H) [in]	1.78 x 3.20 x 3.74
Size w/o bracket (W x L x H) [mm]	45.2 x 81.3 x 95
Surface area [square inches / square cm]	138 / 891
Heat sink material	Aluminum
Heat sink surface finish	Black anodized
Weight w/o DIN bracket [lb / gr]	0.85 / 319
SSR mounting holes	Two 8 x 32
Screw torque [in lb / N m]	15 to 20 / 1.7 to 2.2
Accepts fan(s) / qty & size [mm]	Yes / one or two 40

HS151DR includes

1. Ground screw (10-32 x 3/8 in)
2. DIN Rail Kit (DRK1)
3. Heat Sink (HS151)
4. One Hardware Kit 1 (HK1)

HS151

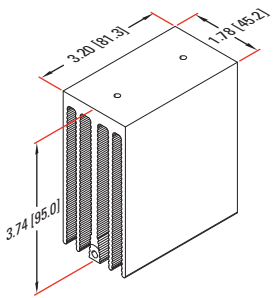

HS151DR

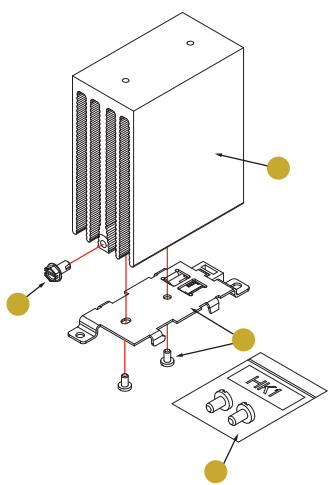

HS122, HS122DR • 1.2 °C/W



- 1.2°C/W Thermal resistance
- Suitable for 1 or 2 single or dual SSR
- DIN rail or panel mountable versions available

Notes: A B D E G


Covers


DIN Rail Bracket


Hardware Kits


Lug Terminals


Thermal Pads

Size w/o bracket (W x L x H) [in]	3.54 x 3.20 x 3.15
Size w/o bracket (W x L x H) [mm]	90.0 x 81.3 x 80.0
Surface area [square inches / square cm]	210.3 / 1360
Heat sink material	Aluminum
Heat sink surface finish	Black anodized
Weight w/o DIN bracket [lb / gr]	1.17 / 532
SSR mounting holes	Six 8 x 32
Screw torque [in lb / N m]	15 to 20 / 1.7 to 2.2
Accepts fan(s) / qty & size [mm]	Yes / one 80

HS122DR includes

1. Ground screw (10-32 x 3/8 in)
2. DIN Rail Kit (DRK1)
3. Heat Sink (HS122)
4. Two Hardware Kits 1 (HK1)

HS122

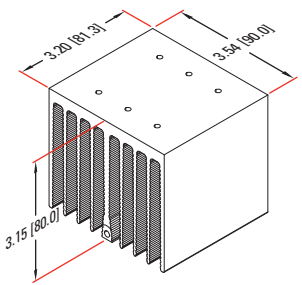

HS122DR

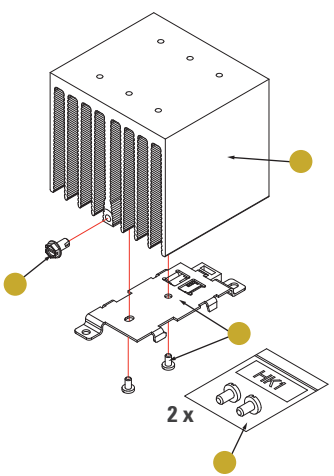

Specifications are subject to change without prior notice

HS103, HS103DR • 1.0 °C/W



- 1.0°C/W Thermal resistance
- Suitable for 1, 2, or 3 single or dual SSRs; one 3 phase SSR
- DIN rail or panel mountable versions available

Notes: A B D E G


Covers


Hardware Kits


Lug Terminals


Thermal Pads

Size w/o bracket (W x L x H) [in]	5.20 x 3 x 2.37
Size w/o bracket (W x L x H) [mm]	132 x 76.2 x 60.2
Surface area [square inches / square cm]	227.2 / 1470
Heat sink material	Aluminum
Heat sink surface finish	Black anodized
Weight w/o DIN bracket [lb / gr]	0.97 / 439
SSR mounting holes	Six 8 x 32
Screw torque [in lb / N m]	15 to 20 / 1.7 to 2.2
Accepts fan(s) / qty & size [mm]	Yes / one or two 40

HS103DR includes

1. Heat Sink (HS103)
2. Extruded DIN Rail Bracket
3. Fasteners
4. Three Hardware Kits 1 (HK1)

HS103

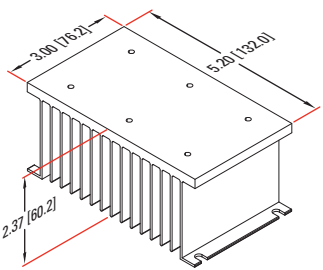

HS103DR

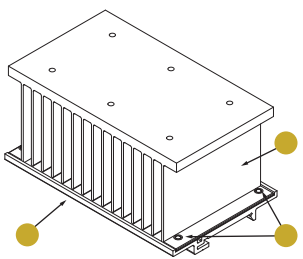

3 x

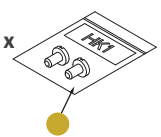

HS101 • 1.0 °C/W NEW!



- 1.0°C/W Thermal resistance
- Suitable for 1 single or dual SSR; one 3 phase SSR
- Panel mountable

Notes: A B D G


Covers


Hardware Kits


Lug Terminals


Thermal Pads

Size w/o bracket (W x L x H) [in]	3.94 x 4.33 x 3.15
Size w/o bracket (W x L x H) [mm]	100 x 110 x 80
Surface area [square inches / square cm]	208 / 1342
Heat sink material	Aluminum
Heat sink surface finish	Black anodized
Weight w/o DIN bracket [lb / gr]	1.18 / 537
SSR mounting holes	Six M4
Screw torque [in lb / N m]	15 to 20 / 1.7 to 2.2
Accepts fan(s) / qty & size [mm]	No

HS101

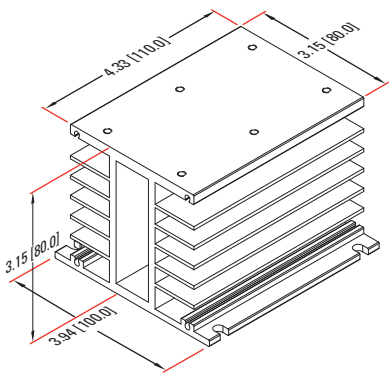

Specifications are subject to change without prior notice

HS073 • 0.7 °C/W NEW!



- 0.7°C/W Thermal resistance
- Suitable for 1, 2 or 3 single or dual SSRs; one 3 phase SSR
- Panel mountable

Notes: A B D G


Covers


Hardware Kits


Lug Terminals


Thermal Pads

Size w/o bracket (W x L x H) [in]	6.82 x 5 x 2.12
Size w/o bracket (W x L x H) [mm]	173.2 x 127 x 53.8
Surface area [square inches / square cm]	385.4 / 2486.44
Heat sink material	Aluminum
Heat sink surface finish	Black anodized
Weight w/o DIN bracket [lb / gr]	2.2 / 997.9
SSR mounting holes	Six 8 x 32
Screw torque [in lb / N m]	15 to 20 / 1.7 to 2.2
Accepts fan(s) / qty & size [mm]	No

HS073

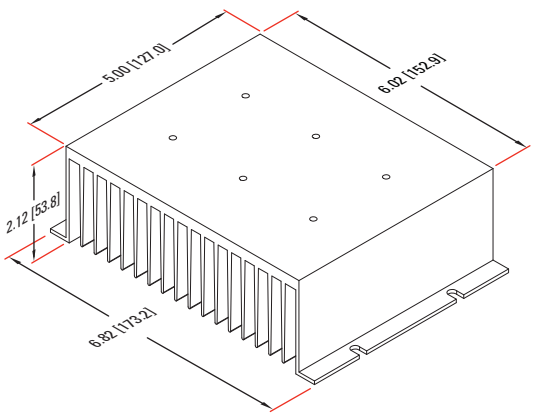

HS072 • 0.7 °C/W



- 0.7°C/W Thermal resistance
- Suitable for 1 or 2 single or dual SSRs
- Panel mountable

Notes: A B D G


Covers


Hardware Kits


Lug Terminals


Thermal Pads

Size w/o bracket (W x L x H) [in]	4.75 x 5.50 x 2.63
Size w/o bracket (W x L x H) [mm]	120.7 x 149.7 x 66.8
Surface area [square inches / square cm]	253.6 / 1640
Heat sink material	Aluminum
Heat sink surface finish	Natural aluminum
Weight w/o DIN bracket [lb / gr]	1.16 / 526
SSR mounting holes	Six 8 x 32
Screw torque [in lb / N m]	15 to 20 / 1.7 to 2.2
Accepts fan(s) / qty & size [mm]	No

HS072

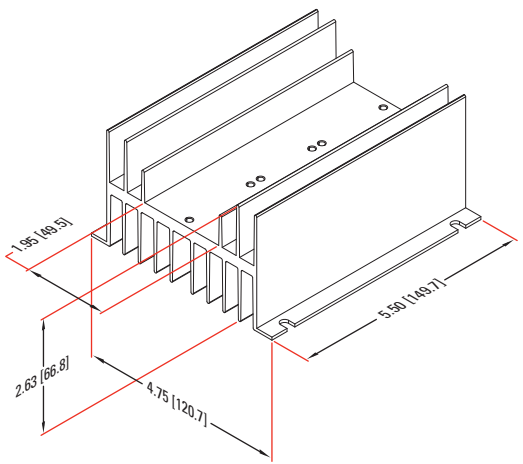

Specifications are subject to change without prior notice

HS053 • 0.5 °C/W



- 0.5°C/W Thermal resistance
- Suitable for 1, 2, or 3 single or dual SSRs; one 3 phase SSR
- Panel mountable

Notes: A B D G


Covers


Hardware Kits


Lug Terminals


Thermal Pads

Size w/o bracket (W x L x H) [in]	6.00 x 6.00 x 3.50
Size w/o bracket (W x L x H) [mm]	152.4 x 152.4 x 88.9
Surface area [square inches / square cm]	694.3 / 4480
Heat sink material	Aluminum
Heat sink surface finish	Black anodized
Weight w/o DIN bracket [lb / gr]	3.14 / 1423
SSR mounting holes	Six 8 x 32
Screw torque [in lb / N m]	15 to 20 / 1.7 to 2.2
Accepts fan(s) / qty & size [mm]	Yes / one 80

HS053

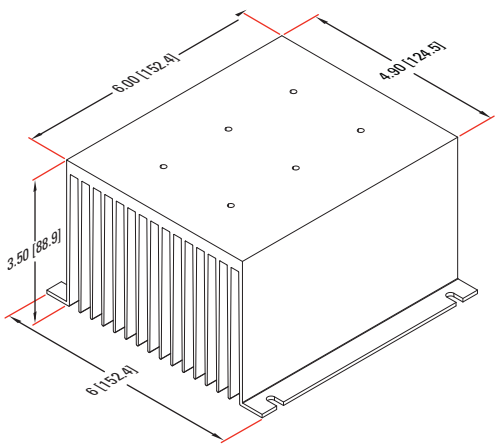

HS033 • 0.36 °C/W NEW!



- 0.36°C/W Thermal resistance
- Suitable for 1, 2 or 3 single or dual SSRs; one 3 phase SSR
- Panel mountable

Notes: A B D G


Covers


Hardware Kits


Lug Terminals


Thermal Pads

Size w/o bracket (W x L x H) [in]	8.54 x 8.75 x 2.75
Size w/o bracket (W x L x H) [mm]	216.9 x 222.25 x 69.8
Surface area [square inches / square cm]	997.85 / 6437.73
Heat sink material	Aluminum
Heat sink surface finish	Black anodized
Weight w/o DIN bracket [lb / gr]	5.75 / 2612
SSR mounting holes	Six 8 x 32
Screw torque [in lb / N m]	15 to 20 / 1.7 to 2.2
Accepts fan(s) / qty & size [mm]	No

HS033

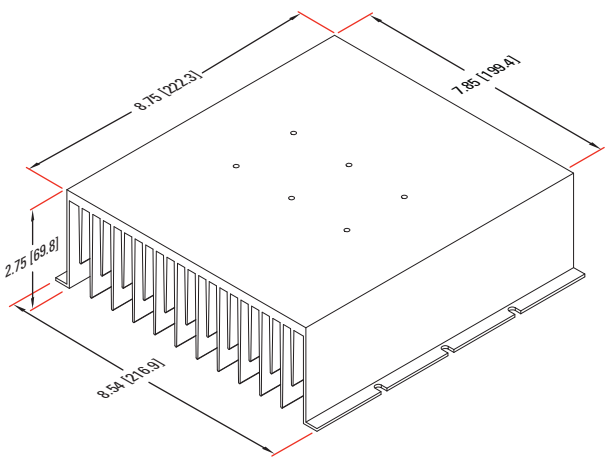

Specifications are subject to change without prior notice

HS023 • 0.25 °C/W NEW!



- 0.25°C/W Thermal resistance
- Suitable for 1, 2 or 3 single or dual SSRs; one 3 phase SSR
- Panel mountable

Notes: A B D G


Covers


Hardware Kits


Lug Terminals


Thermal Pads

Size w/o bracket (W x L x H) [in]	11.14 x 10 x 3.60
Size w/o bracket (W x L x H) [mm]	282.96 x 254 x 91.44
Surface area [square inches / square cm]	1538 / 9922.56
Heat sink material	Aluminum
Heat sink surface finish	Black anodized
Weight w/o DIN bracket [lb / gr]	9.76 / 4430
SSR mounting holes	Six 8 x 32
Screw torque [in lb / N m]	15 to 20 / 1.7 to 2.2
Accepts fan(s) / qty & size [mm]	No

HS023

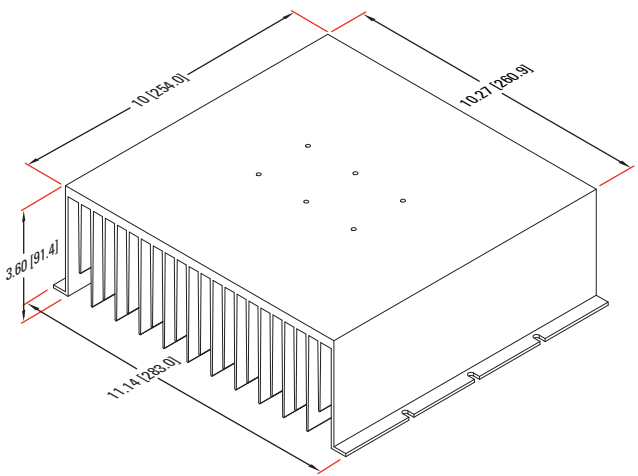

Crydom SSR & Heat Sink Assemblies

Crydom offers a variety of its world class standard off-the-shelf **single, dual and three phase** Solid State Relays mounted on the Crydom HS series Heat Sinks. Our expertise in both SSR design and thermal management enables us to offer optimized pre-assembled solutions for **SSR applications from 5 to 100+ Amps.** Each Assembly is ready-to-use thus reducing procurement activities, secondary machining, and assembly labor.

The standard Crydom SSR/Heat Sink assemblies are either DIN rail mountable or Panel mountable depending upon model selected, and are available with either one pre-installed single channel SSR, dual SSR or three phase SSR . Customer installed options available for the assemblies include clear plastic touch safe SSR covers and copper terminal lugs suitable for up to 3/0 AWG wire.

If you don't find the exact combination of Crydom SSRs and Heat Sinks that you need, **Crydom offers custom adapted assemblies** for applications where further optimization is required for cost, size or performance.

For more information on SSR/Heat Sink selection and available selection tools from Crydom, see page 23 of this catalog or go to **www.crydom.com/en/HSseries.**

See notes: C F

SSR/Heat Sink Assembly Thermal Simulation

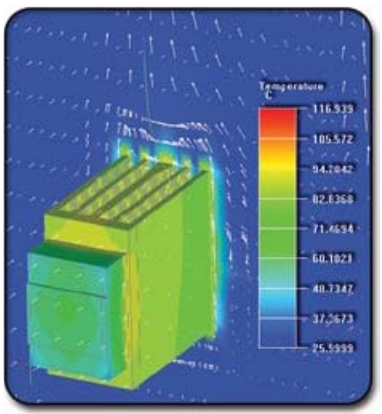

Series

HS **17** **2** **DR** – **2** **D2450**

Total Number of Accepted Standard SSRs
1: 1 SSR (50, 30, 25, 20, 15 & 10 suffix only)
2: 1 or 2 SSRs (20, 17, 12 & 072 suffix only)
3: 1-3 SSRs or one 3phase (10, 073, 05, 03 & 02 suffix only)

Standard Crydom SSR p/n

Thermal Resistance
50: 5.0 °C/W (DR suffix only)
30: 3.0 °C/W
25: 2.5 °C/W
20: 2.0 °C/W
17: 1.7 °C/W
15: 1.5 °C/W
12: 1.2 °C/W
10: 1.0 °C/W
07: 0.7 °C/W
05: 0.5 °C/W
03: 0.36 °C/W
02: 0.25 °C/W

DIN Rail Bracket
Blank: Not included
DR: Included (50, 30, 20, 15, 12 & 10 suffix only)

Number of Mounted SSRs
Blank: 1
2: 2
3: 3

Specifications are subject to change without prior notice

Solid State Relay/Heat Sink Assembly Selection

Why Select a SSR/Heat Sink Assembly versus a Solid State Relay and a Heat Sink?

Assemblies offer the advantage of eliminating the calculations and heat sink selection during the design phase of a project, and they eliminate the assembly process during the production phase of a project. Thermal derating curves for each SSR/Heat Sink combination make the selection of the best possible solution significantly easier. The SSRs and Heat Sinks arrive fully assembled with thermal interface material and mounting screws torqued to the correct values and are "ready to use". Optional available DIN rail mounting brackets can also be ordered pre-installed on the heat sink, further easing mounting.

Selecting a Solid State Relay/Heat Sink Assembly for an Application

Crydom offers technical assistance selecting a SSR/Heat Sink Assembly for any given SSR application through its Applications Engineering Department and on its website. Available "White Papers" and a selection "tool" to determine the optimum SSR/Heat Sink Assembly for an application based upon load current & voltage, control voltage and ambient temperature are available at **www.crydom.com/en/HSseries.**

How to Select a Solid State Relay/Heat Sink Assembly from the catalog

Each Assembly carries a maximum load current rating versus ambient temperature, line voltage rating and control voltage rating. There are load current ratings available up to 100+ Amps AC, line voltage ratings available up to 660 VAC and all models are available with DC control voltage.

Selection of the best assembly can be accomplished as follows:

1. Determine what maximum operating voltage is required for the application.
2. Determine the input control voltage required or voltage range available.
3. Determine the maximum load current and maximum ambient temperature that the Assembly is expected to operate in.
4. Establish the preferred mounting method, panel or DIN rail.
5. Once the above information is gathered, examine each Assembly's derating chart in the catalog and select models with suitable combined rating for the required load current at the required ambient temperature.
6. From this group of Assemblies, select a model with the correct combination of the operating voltage, control voltage and required mounting.
7. Order the Crydom SSR/Heat Sink assembly from your preferred Crydom Distributor or contact your local Crydom Representative or Regional Sales Office for more information or technical assistance.

You may choose to go to our website at **www.crydom.com/en/HSseries** and use the assembly selection tool available there. The selection tool requires the same parameters as noted above to select an SSR/Heat Sink Assembly.

Don't find the combination of ratings you need?

Crydom markets a broad selection of class leading Solid State Relays. We not only offer the customer the ability to select among a wide range of standard panel mount power SSR products, including AC output or DC output, random or zero turn on, single, dual or 3 phase SSRs mounted to any of our available heat sinks, but we can adapt the design of the Solid State Relay and even the Heat Sinks themselves to precisely meet your application requirements. Consult your local Crydom Representative for more information and assistance.

HS501DR • DIN Rail Mount



- 10 Amps AC output @ 40ºC
- 24 to 280 or 48 to 660 VAC operating voltage range
- Single channel output
- 3 to 32 VDC input control voltage
- DIN rail mountable
- UL, CSA, VDE, CE approved SSRs

Notes: B F G H

Derating Curve

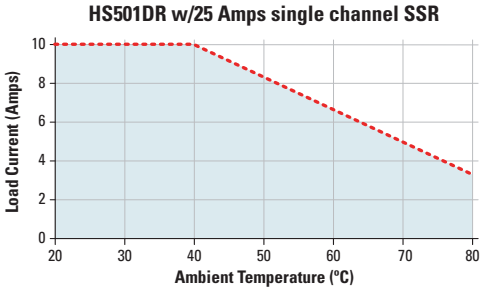

Single Phase	Included SSRs	Operating Voltage Range [Vrms]	Load Current Range [Arms]	Control Voltage Range [VDC]	Control Current [mA]
HS501DR-D2425	1	24-280	.04-10	3-32	3.4 @ 5 VDC
HS501DR-HD6025	1	48-660	.04-10	3-32	2.0 @ 5 VDC

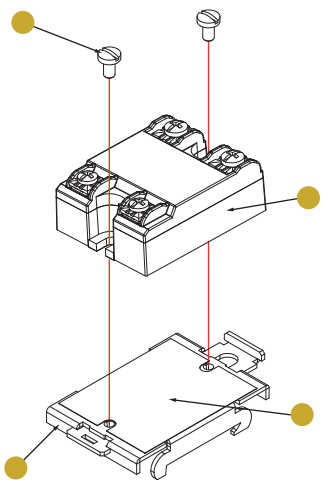

Assembly includes

1. DIN Mounting Bracket (HS501DR)
2. Thermal Pad (HSP-1)
3. SSR (See table above for options)
4. One Hadware Kit (HKM1)

Specifications are subject to change without prior notice

HS301DR • DIN Rail Mount



- 24 Amps AC output @ 40ºC
- 24 to 280 or 48 to 660 VAC operating voltage range
- Single channel output
- 3 to 32 VDC input control voltage
- DIN rail mountable
- UL, CSA, VDE, CE approved SSRs

Notes: B F G H

Derating Curve

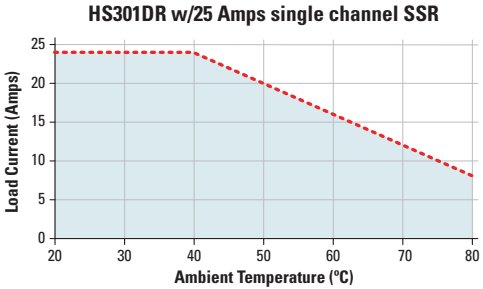

Single Phase	Included SSRs	Operating Voltage Range [Vrms]	Load Current Range [Arms]	Control Voltage Range [VDC]	Control Current [mA]
HS301DR-D2425	1	24-280	.04-24	3-32	3.4 @ 5 VDC
HS301DR-HD6025	1	48-660	.04-24	3-32	2.0 @ 5 VDC

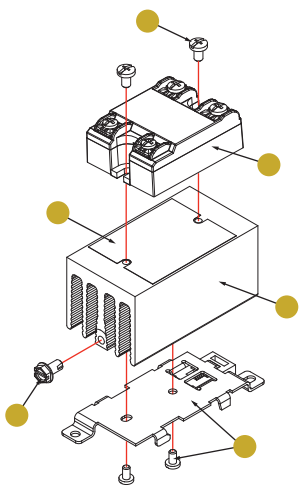

Assembly includes

1. Ground screw (10-32 x 3/8 in)
2. DIN Rail Kit (DRK1)
3. Heat Sink (HS301)
4. Thermal Pad (HSP-1)
5. SSR (See table above for options)
6. One Hardware Kit 1 (HK1)

HS251 • Panel Mount



- 28 Amps AC output @ 40°C
- 24 to 280 or 48 to 660 VAC operating voltage range
- Single channel output
- 3 to 32 VDC input control voltage
- Panel mountable
- UL, CSA, VDE, CE approved SSRs

Notes: B F G H

Derating Curve

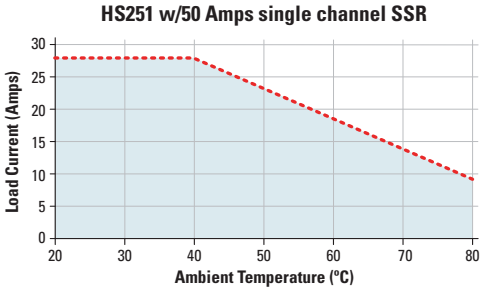

Single Phase	Included SSRs	Operating Voltage Range [Vrms]	Load Current Range [Arms]	Control Voltage Range [VDC]	Control Current [mA]
HS251-D2450	1	24-280	.04-28	3-32	3.4 @ 5 VDC
HS251-HD6050	1	48-660	.04-28	3-32	2.0 @ 5 VDC

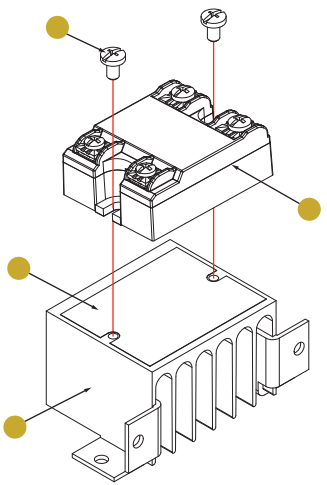

Assembly includes

1. Heat Sink (HS251)
2. Thermal Pad (HSP-1)
3. SSR (See table above for options)
4. One Hardware Kit 1 (HK1)

Specifications are subject to change without prior notice

HS202DR • DIN Rail Mount



- 35 Amps AC output @ 40°C
- 24 to 280 or 48 to 660 VAC operating voltage range
- Single channel output
- 3 to 32 VDC input control voltage
- DIN rail mountable
- UL, CSA, VDE, CE approved SSRs

Notes: B F G H

Derating Curve

HS202DR w/50 Amps single channel

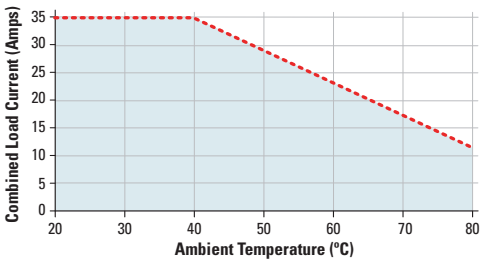

Single Phase	Included SSRs	Operating Voltage Range [Vrms]	Load Current Range [Arms]	Control Voltage Range [VDC]	Control Current [mA]
HS202DR-D2450	1	24-280	.04-35	3-32	3.4 @ 5 VDC
HS202DR-HD6050	1	48-660	.04-35	3-32	2.0 @ 5 VDC

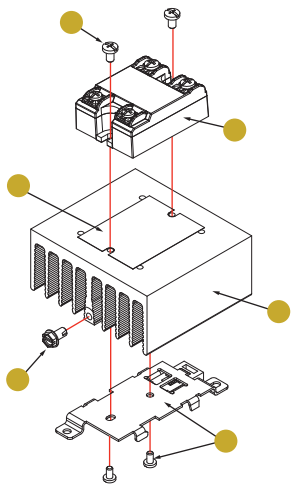

Assembly includes

1. Ground screw (10-32 x 3/8 in)
2. DIN Rail Kit (DRK1)
3. Heat Sink (HS202)
4. Thermal Pad (HSP-1)
5. SSR (See table above for options)
6. One Hadware Kit 1 (HK1)

HS201DR • DIN Rail Mount



- 35 Amps AC output @ 40ºC
- 24 to 280 or 48 to 660 VAC operating voltage range
- Single or Dual channel outputs
- 3 to 32 VDC input control voltage
- DIN Rail mountable
- UL, CSA, VDE, CE approved SSRs

Notes: B F G H I

Derating Curve

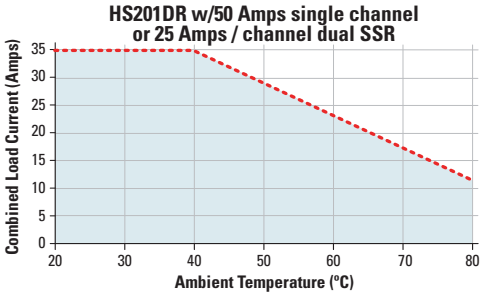

Single Phase	Included SSRs	Operating Voltage Range [Vrms]	Load Current Range [Arms]	Control Voltage Range [VDC]	Control Current [mA]
HS201DR-D2450	1	24-280	.04-35	3-32	3.4 @ 5 VDC
HS201DR-HD6050	1	24-280	.04-35	3-32	2.0 @ 5 VDC

Dual	Included SSRs	Operating Voltage Range [Vrms]	Load Current Range [Arms]	Control Voltage Range [VDC]	Control Current [mA]
HS201DR-CC2425W3U	1	24-280	.15-35	4-32	10 @ 12 VDC

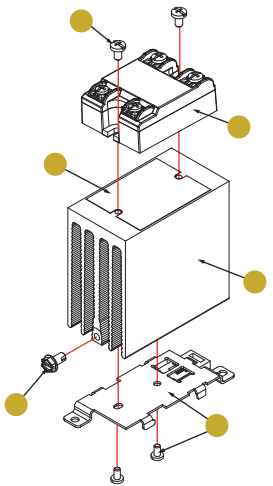

Assembly includes

1. Ground screw (10-32 x 3/8 in)
2. DIN Rail Kit (DRK1)
3. Heat Sink (HS201)
4. Thermal Pad (HSP-1)
5. SSR (See table above for options)
6. One Hardware Kit 1 (HK1)

Specifications are subject to change without prior notice

HS172 • Panel Mount



- 36 Amps AC output @ 40°C
- 24 to 280 or 48 to 660 VAC operating voltage range
- Single channel output
- 3 to 32 VDC input control voltage
- Panel mountable
- UL, CSA, VDE, CE approved SSRs

Notes: B F G H

Derating Curve

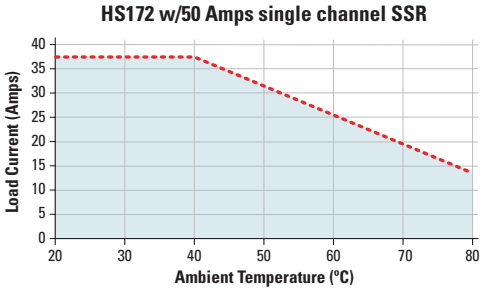

Single Phase	Included SSRs	Operating Voltage Range [Vrms]	Load Current Range [Arms]	Control Voltage Range [VDC]	Control Current [mA]
HS172-D2450	1	24-280	.04-36	3-32	3.4 @ 5 VDC
HS172-HD6050	1	48-660	.04-36	3-32	2.0 @ 5 VDC

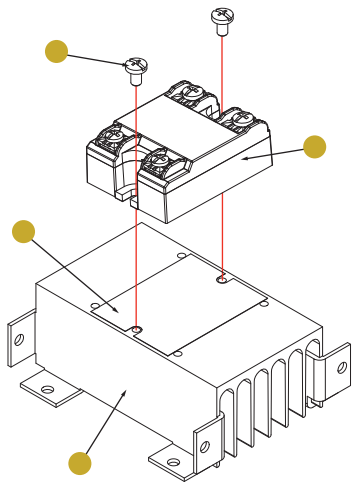

Assembly includes

1. Heat Sink (HS172)
2. Thermal Pad (HSP-1)
3. SSR (See table above for options)
4. One Hardware Kit 1 (HK1)

HS151DR • DIN Rail Mount



- 40 Amps AC output @ 40°C
- 24 to 280 or 48 to 660 VAC operating voltage range
- Single or Dual channel outputs
- 3 to 32 VDC input control voltage
- DIN Rail mountable
- UL, CSA, VDE, CE approved SSRs

Notes: B F G H I

Derating Curve

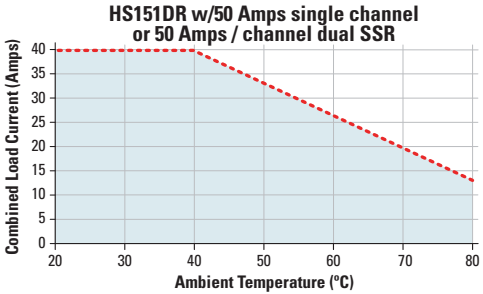

Single Phase	Included SSRs	Operating Voltage Range [Vrms]	Load Current Range [Arms]	Control Voltage Range [VDC]	Control Current [mA]
HS151DR-D2450	1	24-280	.04-40	3-32	3.4 @ 5 VDC
HS151DR-HD6050	1	48-660	.04-40	3-32	2.0 @ 5 VDC

Dual	Included SSRs	Operating Voltage Range [Vrms]	Load Current Range [Arms]	Control Voltage Range [VDC]	Control Current [mA]
HS151DR-CC2450W3U	1	24-280	.15-40	4-32	10 @ 12 VDC

Assembly includes

1. Ground screw (10-32 x 3/8 in)
2. DIN Rail Kit (DRK1)
3. Heat Sink (HS151)
4. Thermal Pad (HSP-1)
5. SSR (See table above for options)
6. One Hardware Kit 1 (HK1)

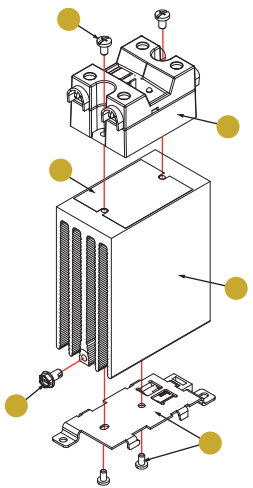

Specifications are subject to change without prior notice

HS122DR • DIN Rail Mount



- 45 Amps AC output @ 40ºC
- 24 to 280 or 48 to 660 VAC operating voltage range
- Single or dual channel inputs
- 3 to 32 VDC input control voltage
- DIN Rail mountable
- UL, CSA, VDE, CE approved SSRs

Notes: B F G H I

Derating Curve

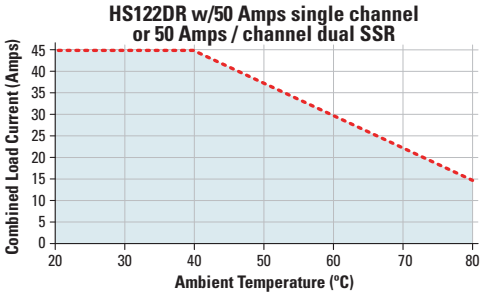

Single Phase	Included SSRs	Operating Voltage Range [Vrms]	Load Current Range [Arms]	Control Voltage Range [VDC]	Control Current [mA]
HS122DR-D2450	1	24-280	.04-45	3-32	3.4 @ 5 VDC
HS122DR-HD6050	1	48-660	.04-45	3-32	2.0 @ 5 VDC

Dual	Included SSRs	Operating Voltage Range [Vrms]	Load Current Range [Arms]	Control Voltage Range [VDC]	Control Current [mA]
HS122DR-CC2450W3U	1	24-280	.15-45	4-32	10 @ 12VDC

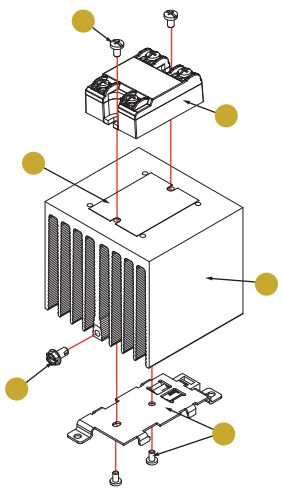

Assembly includes

1. Ground screw (10-32 x 3/8 in)
2. DIN Rail Kit (DRK1)
3. Heat Sink (HS122)
4. Thermal Pad (HSP-1)
5. SSR (See table above for options)
6. One Hadware Kit 1 (HK1)

HS103DR • DIN Rail Mount



- 55 Amps AC output @ 40°C
- 24 to 280 or 48 to 660 VAC operating voltage range
- Single channel or 3 phase outputs
- 3 to 32 VDC input control voltage
- DIN Rail mountable
- UL, CSA, VDE, CE approved SSRs

Notes: B F G H I

Derating Curve

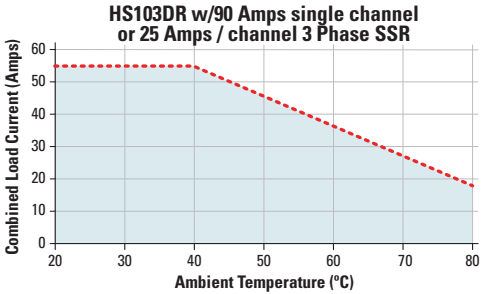

Single Phase	Included SSRs	Operating Voltage Range [Vrms]	Load Current Range [Arms]	Control Voltage Range [VDC]	Control Current [mA]
HS103DR-D2490	1	24-280	.04-55	3-32	3.4 @ 5 VDC
HS103DR-HD6090	1	48-660	.04-55	3-32	2.0 @ 5 VDC

3 Phase	Included SSRs	Operating Voltage Range [Vrms]	Load Current Range [Arms]	Control Voltage Range [VDC]	Control Current [mA]
HS103DR-D53TP25D	1	48-530	.05-55	3-32	20 @ 5 VDC

Assembly includes

1. Fasteners
2. Extruded DIN Rail Bracket
3. Heat Sink (HS103)
4. Thermal Pad (HSP-1/HSP-3)
5. SSR (See table above for options)
6. One Hardware Kit 1 (HK1)

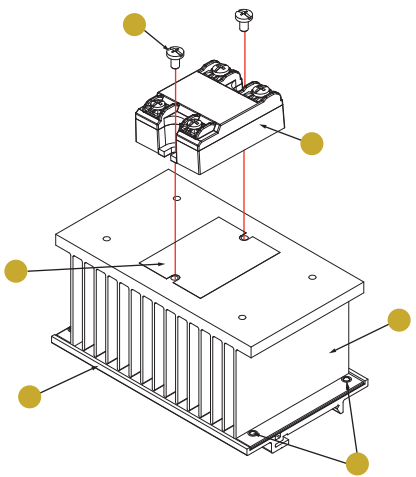

Specifications are subject to change without prior notice

HS072 • Panel Mount



- 65 Amps AC output @ 40°C
- 24 to 280 or 48 to 660 VAC operating voltage range
- Single channel output
- 3 to 32 VDC input control voltage
- Panel mountable
- UL, CSA, VDE, CE approved SSRs

Notes: B F G H

Derating Curve

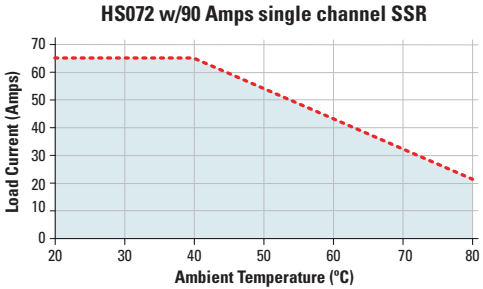

Single Phase	Included SSRs	Operating Voltage Range [Vrms]	Load Current Range [Arms]	Control Voltage Range [VDC]	Control Current [mA]
HS072-D2490	1	24-280	.04-65	3-32	3.4 @ 5 VDC
HS072-HD6090	1	48-660	.04-65	3-32	2.0 @ 5 VDC

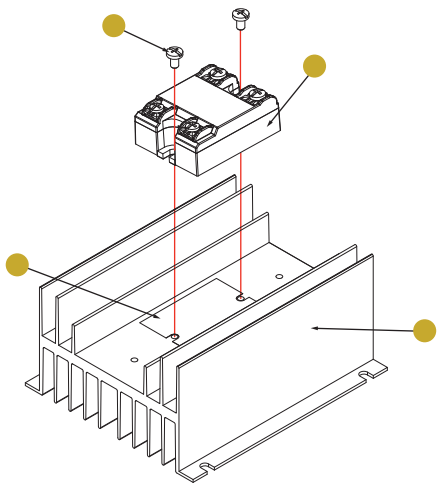

Assembly includes

1. Heat Sink (HS072)
2. Thermal Pad (HSP-1)
3. SSR (See table above for options)
4. One Hardware Kit 1 (HK1)

HS053 • Panel Mount



- 82.5 Amps AC output @ 40°C
- 24 to 280 or 48 to 660 VAC operating voltage range
- Single channel or 3 phase outputs
- 3 to 32 VDC input control voltage
- Panel mountable
- UL, CSA, VDE, CE approved SSRs

Notes: B F G H I

Derating Curve

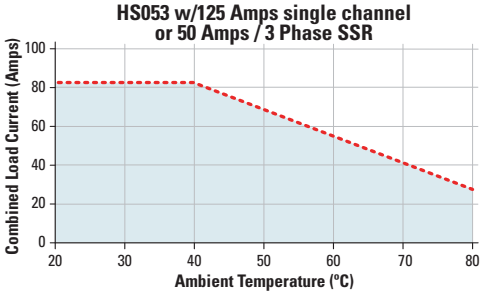

Single Phase	Included SSRs	Operating Voltage Range [Vrms]	Load Current Range [Arms]	Control Voltage Range [VDC]	Control Current [mA]
HS053-D24125	1	24-280	.15-82.5	3-32	3.4 @ 5 VDC
HS053-HD60125	1	48-660	.15-82.5	3-32	2.0 @ 5 VDC

3 Phase	Included SSRs	Operating Voltage Range [Vrms]	Load Current Range [Arms]	Control Voltage Range [VDC]	Control Current [mA]
HS053-D53TP50D	1	48-530	.05-82.5	3-32	20 @ 5 VDC

Assembly includes

1. Heat Sink (HS053)
2. Thermal Pad (HSP-1/HSP-3)
3. SSR (See table above for options)
4. One Hardware Kit 1 (HK1)

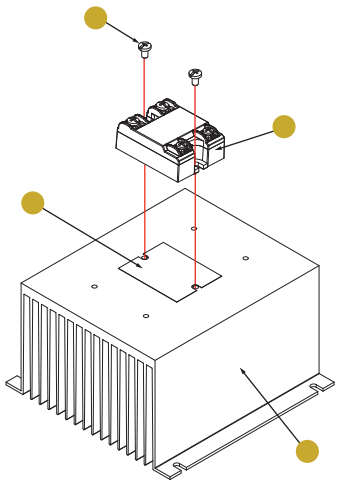

Specifications are subject to change without prior notice

Accessories

The installation of Crydom relays and assemblies is supported with a comprehensive offer of accessories including Thermal Pads, Protective Covers, Terminal Lugs, Hardware Kits, and DIN Rail Kits. Crydom can also create special configuration SSR/heat sink assemblies that include installed accessories if so desired.

For complete specifications of these and other Crydom accessories visit the Crydom website at **www.crydom.com**

Product / Accessory index

Page	Part number	HK1	HK2	HKM1	HSP-1 HSP-2	HSP-3 HSP-5	KS100 KS101	KS300	TRM6	TRM1	TRM3/0	DRK1
7	**HS501DR**			●	●		●		●	●		
8	**HS301**	●	●		●		●		●	●		●
9	**HS251**	●			●		●		●	●		
10	**HS202**	●	●		●	●	●	●	●	●	●	●
11	**HS201**	●	●		●		●		●	●		●
12	**HS172**	●	●		●		●		●	●		
13	**HS151**	●	●		●		●		●	●		●
14	**HS122**	●	●		●	●	●	●	●	●	●	●
15	**HS103**	●			●	●	●	●	●	●	●	
16	**HS101**			●	●	●	●	●	●	●	●	
17	**HS073**	●			●	●	●	●	●	●	●	
18	**HS072**	●			●		●		●	●		
19	**HS053**	●			●	●	●	●	●	●	●	
20	**HS033**	●			●	●	●	●	●	●	●	
21	**HS023**	●			●	●	●	●	●	●	●	

Covers



Part Number: KS100
Clear plastic cover for 3rd generation single phase SSRs



Part Number: KS101 NEW!
Clear plastic cover for 4th generation single phase SSRs



Part number: KS300
Clear plastic cover for three phase SSRs.

DIN Rail Bracket



Part Number: DRK1
Spring, retaining clip, 45 mm DIN Rail bracket and 2 screws 6-32 x 1/4 in.

Hardware Kits



Part Number: HK1
Bag with 2 SSR mounting screws 8-32 x 3/8.



Part Number: HK2
Bag with 1 ground screw 10-32 x 3/8 and 2 bracket screws.



Part Number: HKM1 NEW!
Bag with 2 SSR mounting screws M4 x 9mm. For use with HS101 & HS501DR.

Lug Terminals



Part Number TRM6
Accepts AWG 14 (2.1 mm^2) to AWG 6 (13.3 mm^2) wire size. Mounts with #8, #10, M4 or M5 screws.



Part Number: TRM1
Accepts AWG 6 (13.3 mm^2) to AWG 0 (53.5 mm^2) wire size. Mounts with #8, #10, M4 or M5 screws. (Not compatible with IP20)



Part Number TRM3/0
Accepts AWG 4 (21.2 mm^2) to AWG 3/0 (85 mm^2) wire size. Mounts with 3/8" bolt/stud.

Thermal Pads

Part Number: HSP-1
Non-adhesive thermal pads for standard hockey puck package SSRs (25 pack).



Part Number: HSP-2
Thermal pad for standard hockey puck package SSRs. Adhesive on one side.

Part Number: HSP-3
Non-adhesive thermal pad for large puck panel mount SSRs.



Part Number: HSP-5
Thermal pad for large puck panel mount SSRs. Adhesive on one side.

Specifications are subject to change without prior notice

crydom

AMERICAS



United States & Canada
Sales Support:
Tel.: +1 (877) 502 5500
Fax: +1 (619) 210 1590
sales@crydom.com

Technical Support:
Tel.: +1 (877) 702 7700
support@crydom.com

Southern & Central American Countries
Tel.: +1 (877) 502 5500
Fax: +1 (619) 210 1590
sales@crydom.com

EUROPE, MIDDLE EAST & AFRICA



Regional Sales & Technical Support

United Kingdom
Tel.: +44 (0) 1202 416170
Fax: +44 (0) 1202 416171
sales-europe@crydom.com
support-europe@crydom.com

France
Tel.: +33 (0) 1707 92389
Fax: +44 (0) 1202 416171
sales-europe@crydom.com
support-europe@crydom.com

Spain
Tel.: +34 902 876 217
Fax: +44 (0) 1202 416171
sales-europe@crydom.com
support-europe@crydom.com

Austria & Switzerland
Tel.: +44 (0) 1202 416170
Fax: +44 (0) 1202 416171
vertrieb@crydom.com
support-europe@crydom.com

Germany
Tel.: +49 (0) 180 3000 506
Fax: +44 (0) 1202 416171
vertrieb@crydom.com
support-europe@crydom.com

Netherlands
Tel.: +31 (0) 71 582 0068
FFax: +44 (0) 1202 416171
sales-europe@crydom.com
support-europe@crydom.com

Belgium
Tel.: +32 (0) 2 460 4413
Fax: +44 (0) 1202 416171
sales-europe@crydom.com
support-europe@crydom.com

Italy
Tel.: +39 (0) 2360 26567
Fax: +44 (0) 1202 416171
sales-europe@crydom.com
support-europe@crydom.com

Middle East, Africa & Other European Countries
el.: +44 (0) 1202 416170
Fax: +44 (0) 1202 416171
sales-europe@crydom.com
support-europe@crydom.com

ASIA



China & Hong Kong
Sales Support
Tel.: +86 (21) 2306 1648
Fax: +86 (21) 2306 1601
sales-cn@crydom.com

Technical Support
support-cn@crydom.com

South Korea
Tel.: +82 31 601 2088
Fax: +82 31 601 2099
sales-cn@crydom.com

India & South East Asia Pacific
Tel.: +91 80 6792 0879
sales-cn@crydom.com

© 2014 Crydom Inc., All Rights Reserved.

Specifications are subject to change without prior notice. Crydom and the Crydom logo are registered trademarks of Crydom Inc.

CAT/CR/HS2/EN

Distributed by :

04/2014
Rev.100416