SIEMENS

Data sheet 3RA2110-1DA15-1AP0



Load feeder fuseless, Direct-on-line starting 400 V AC, Size S00 2.20...3.20 A 230 V AC screw terminal for installation on standard mounting rail (also fulfills type of coordination 1) Type of coordination 2, Iq = 150 kA 1 NO (contactor)

product brand name	SIRIUS
product designation	Direct (on-line) starter
design of the product	for standard rail or screw mounting
product type designation	3RA21
manufacturer's article number	
● of the supplied contactor	3RT2015-1AP01
● of the supplied circuit-breakers	3RV2011-1DA10
● of the supplied link module	3RA1921-1DA00
General technical data	
size of the circuit-breaker	S00
size of load feeder	S00
power loss [W] for rated value of the current	
● at AC in hot operating state per pole	2.6 W
● without load current share typical	4.2 W
insulation voltage with degree of pollution 3 at AC rated value	690 V
surge voltage resistance rated value	6 kV
degree of protection NEMA rating	other
shock resistance according to IEC 60068-2-27	6g / 11 ms
mechanical service life (operating cycles) of contactor typical	30 000 000
type of assignment	2
type of protection according to ATEX directive 2014/34/EU	Ex II (2) GD
certificate of suitability according to ATEX directive 2014/34/EU	DMT 02 ATEX F 001
reference code according to IEC 81346-2:2019	Q
Substance Prohibitance (Date)	10/01/2009
Ambient conditions	
ambient temperature	
● during operation	-20 ... +60 °C
● during storage	-50 ... +80 °C
● during transport	-50 ... +80 °C
temperature compensation	-20 ... +60 °C
relative humidity during operation	10 ... 95 %
Main circuit	
number of poles for main current circuit	3
design of the switching contact	electromechanical
adjustable current response value current of the current-dependent overload release	2.2 ... 3.2 A
operating voltage	
● rated value	690 V
● at AC-3 rated value maximum	690 V
● at AC-3e rated value maximum	690 V

Subject to change without notice
© Copyright Siemens

operating frequency rated value	50 ... 60 Hz
operational current	
● at AC-3 at 400 V rated value	3.2 A
● at AC-3e at 400 V rated value	3.2 A
operating power	
● at AC-3	
— at 400 V rated value	1 100 W
● at AC-3e	
— at 400 V rated value	1 100 kW
Control circuit/ Control	
type of voltage of the control supply voltage	AC
control supply voltage at AC	
● at 50 Hz rated value	230 V
● at 50 Hz rated value	230 ... 230 V
● at 60 Hz rated value	230 V
● at 60 Hz rated value	230 ... 230 V
apparent holding power of magnet coil at AC	4.2 VA
● at 50 Hz	4.2 VA
● at 60 Hz	3.3 VA
inductive power factor with the holding power of the coil	0.25
● at 50 Hz	0.25
● at 60 Hz	0.25
Auxiliary circuit	
product extension auxiliary switch	Yes
Protective and monitoring functions	
trip class	CLASS 10
design of the overload release	thermal (bimetallic)
response value current of instantaneous short-circuit trip unit	42 A
UL/CSA ratings	
full-load current (FLA) for 3-phase AC motor	
● at 480 V rated value	3.2 A
● at 600 V rated value	3.2 A
yielded mechanical performance [hp]	
● for single-phase AC motor	
— at 110/120 V rated value	0.12 hp
— at 230 V rated value	0.33 hp
● for 3-phase AC motor	
— at 200/208 V rated value	0.75 hp
— at 220/230 V rated value	1 hp
— at 460/480 V rated value	2 hp
— at 575/600 V rated value	3 hp
Short-circuit protection	
product function short circuit protection	Yes
design of the short-circuit trip	magnetic
conditional short-circuit current (Iq)	
● at 400 V according to IEC 60947-4-1 rated value	150 000 A
Installation/ mounting/ dimensions	
mounting position	vertical
fastening method	screw and snap-on mounting onto 35 mm DIN rail
height	167 mm
width	45 mm
depth	97 mm
required spacing	
● for grounded parts	
— forwards	20 mm
— backwards	0 mm
— upwards	50 mm
— at the side	20 mm
— downwards	10 mm
● for live parts	

Subject to change without notice
© Copyright Siemens

— forwards	20 mm
— backwards	0 mm
— upwards	50 mm
— downwards	10 mm
— at the side	20 mm

Connections/ Terminals

type of electrical connection	
● for main current circuit	screw-type terminals
● for auxiliary and control circuit	screw-type terminals

Safety related data

B10 value with high demand rate according to SN 31920	1 000 000
proportion of dangerous failures	
● with high demand rate according to SN 31920	73 %
touch protection on the front according to IEC 60529	finger-safe, for vertical contact from the front

Communication/ Protocol

protocol is supported	
● PROFINET IO protocol	No
● PROFIsafe protocol	No
protocol is supported AS-Interface protocol	No

Certificates/ approvals

General Product Approval		For use in hazard-ous locations	Declaration of Conformity	
Confirmation	UL, EAC	ATEX	EG-Konf.	UKCA

Test Certificates		Marine / Shipping			
Special Test Certific-ate	Type Test Certific-ates/Test Report	ABS	Bureau Veritas	Lloyd's Register LRS	PRS

Marine / Shipping			other	Railway
RINA	RMRS	DNV·GL	Confirmation	Vibration and Shock

Further information

Siemens has decided to exit the Russian market (see here).
https://press.siemens.com/global/en/pressrelease/siemens-wind-down-russian-business
Siemens is working on the renewal of the current EAC certificates.
Please contact your local Siemens office on the status of validity of the EAC certification if you intend to import or offer to supply these products to an EAC relevant market (other than the sanctioned EAEU member states Russia or Belarus).
Information on the packaging
https://support.industry.siemens.com/cs/ww/en/view/109813875
Information- and Downloadcenter (Catalogs, Brochures,…)
https://www.siemens.com/ic10
Industry Mall (Online ordering system)
https://mall.industry.siemens.com/mall/en/en/Catalog/product?mlfb=3RA2110-1DA15-1AP0
Cax online generator
http://support.automation.siemens.com/WW/CAXorder/default.aspx?lang=en&mlfb=3RA2110-1DA15-1AP0
Service&Support (Manuals, Certificates, Characteristics, FAQs,...)
https://support.industry.siemens.com/cs/ww/en/ps/3RA2110-1DA15-1AP0
Image database (product images, 2D dimension drawings, 3D models, device circuit diagrams, EPLAN macros, ...)
http://www.automation.siemens.com/bilddb/cax_de.aspx?mlfb=3RA2110-1DA15-1AP0&lang=en
Characteristic: Tripping characteristics, I²t, Let-through current
https://support.industry.siemens.com/cs/ww/en/ps/3RA2110-1DA15-1AP0/char
Further characteristics (e.g. electrical endurance, switching frequency)
http://www.automation.siemens.com/bilddb/index.aspx?view=Search&mlfb=3RA2110-1DA15-1AP0&objecttype=14&gridview=view1

Subject to change without notice
© Copyright Siemens

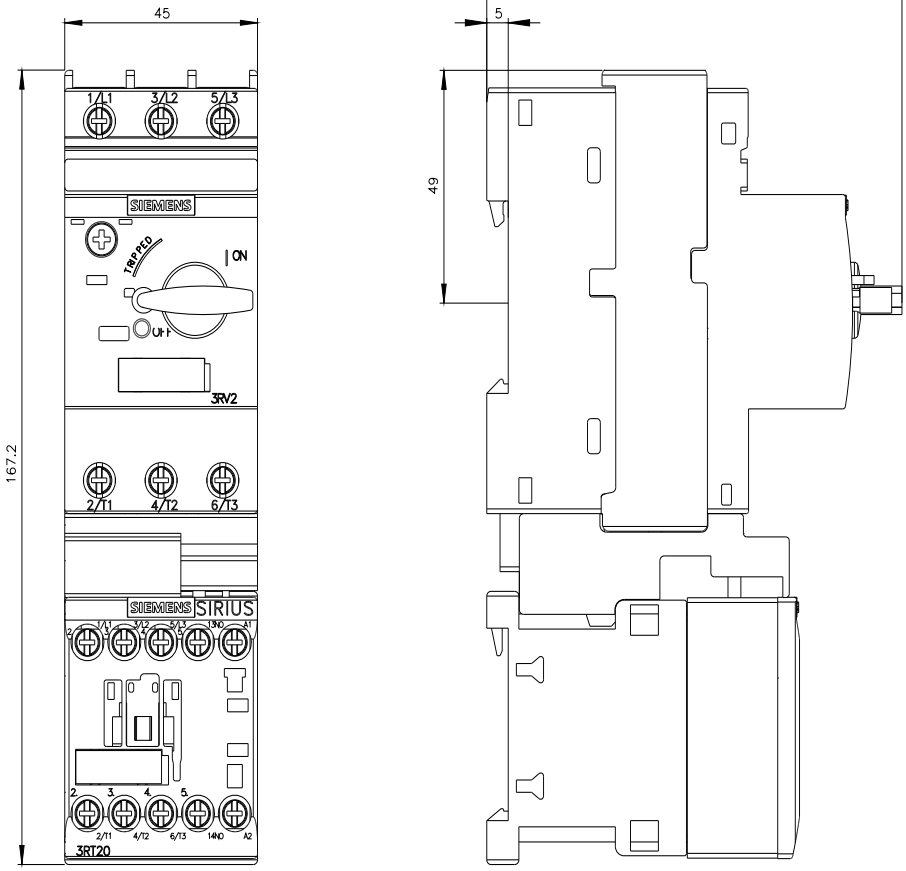

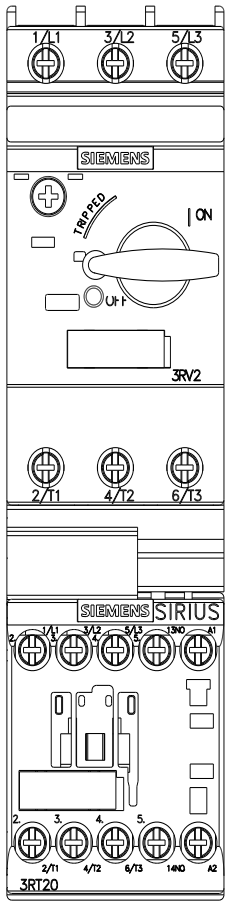

Subject to change without notice
© Copyright Siemens

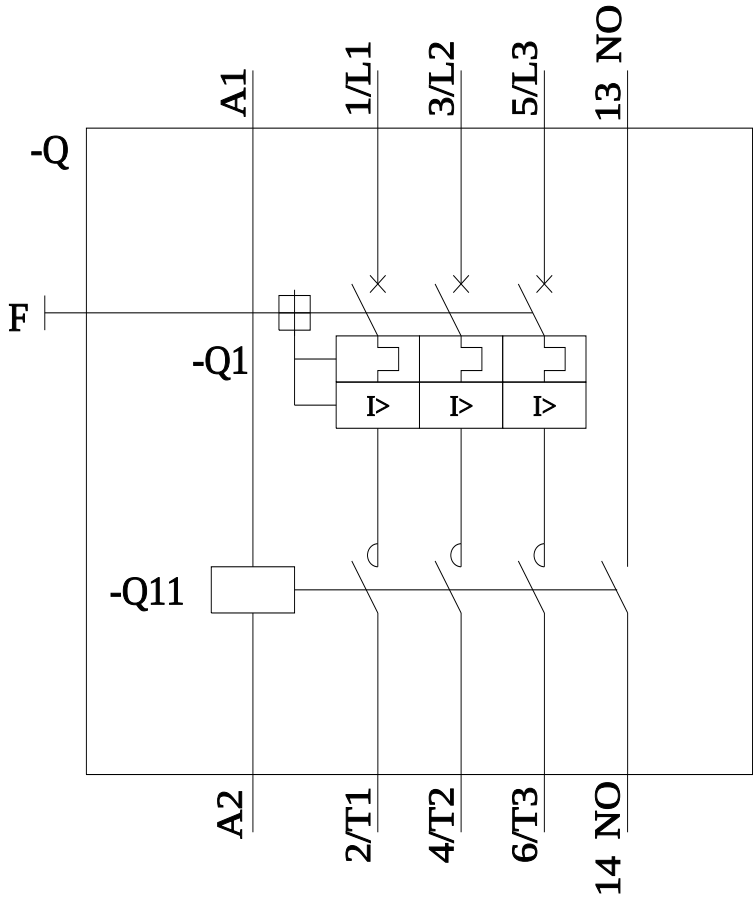

last modified: 4/17/2023

Subject to change without notice
© Copyright Siemens