SIEMENS

Data sheet 3RA2115-1GD15-1AP6

	Fuseless motor starter Direct start 600VAC Size S00 4.5-6.3A 220/240VAC 50/60HZ screw connection For snapping onto 60 mm busbar systems Type of coordination 1 1NO+1NC (MSP) 1NO (contactor)
product brand name	SIRIUS
product designation	non-fused motor starter 3RA2
design of the product	direct starter
manufacturer's article number	
● of the supplied contactor	3RT2015-1AP61
● of the supplied circuit-breakers	3RV2011-1GA15
● of the supplied busbar adapter	8US1251-5DS10
● of the supplied link module	3RA1921-1DA00
General technical data	
size of the circuit-breaker	S00
size of load feeder	S00
product extension auxiliary switch	Yes
insulation voltage with degree of pollution 3 at AC rated value	690 V
degree of pollution	3
surge voltage resistance rated value	6 kV
shock resistance according to IEC 60068-2-27	6g / 11 ms
mechanical service life (operating cycles) of contactor typical	30 000 000
type of assignment	1
Ambient conditions	
ambient temperature	
● during operation	-20 ... +60 °C
● during storage	-50 ... +80 °C
● during transport	-55 ... +80 °C
Main circuit	
number of poles for main current circuit	3
design of the switching contact	electromechanical
adjustable current response value current of the current-dependent overload release	4.5 ... 6.3 A
operating voltage	
● rated value	690 V
● at AC-3 rated value maximum	690 V
operating frequency rated value	50 ... 60 Hz
operational current at AC-3 at 400 V rated value	4.9 A
operating power at AC-3	
● at 400 V rated value	2 200 W
● at 500 V rated value	3 000 W
Control circuit/ Control	
control supply voltage at AC	
● at 50 Hz rated value	220 V
● at 50 Hz rated value	187 ... 242 V
● at 60 Hz rated value	240 V
● at 60 Hz rated value	192 ... 264 V
apparent holding power of magnet coil at AC	4.8 VA
inductive power factor with the holding power of the coil	0.25
Auxiliary circuit	
number of NC contacts for auxiliary contacts	1
number of NO contacts for auxiliary contacts	2
Protective and monitoring functions	
trip class	CLASS 10
design of the overload release	thermal (bimetallic)

Subject to change without notice
© Copyright Siemens

response value current of instantaneous short-circuit trip unit	81.9 A
UL/CSA ratings	
full-load current (FLA) for 3-phase AC motor	
● at 480 V rated value	4.8 A
● at 600 V rated value	6.1 A
yielded mechanical performance [hp]	
● for single-phase AC motor	
— at 110/120 V rated value	0.25 hp
— at 230 V rated value	0.5 hp
● for 3-phase AC motor	
— at 200/208 V rated value	1 hp
— at 220/230 V rated value	1.5 hp
— at 460/480 V rated value	3 hp
— at 575/600 V rated value	5 hp
Short-circuit protection	
product function short circuit protection	Yes
design of the short-circuit trip	magnetic
conditional short-circuit current (Iq)	
● at 400 V according to IEC 60947-4-1 rated value	153 000 A
Installation/ mounting/ dimensions	
mounting position	vertical
fastening method	for snapping onto 60 mm busbar systems
height	200 mm
width	45 mm
depth	155.1 mm
required spacing	
● for grounded parts	
— forwards	0 mm
— backwards	0 mm
— upwards	20 mm
— at the side	9 mm
— downwards	10 mm
● for live parts	
— forwards	0 mm
— backwards	0 mm
— upwards	20 mm
— downwards	10 mm
— at the side	9 mm
Connections/ Terminals	
type of electrical connection for main current circuit	screw-type terminals
type of connectable conductor cross-sections for main contacts stranded	0.5 ... 4 mm², 2x (0.75 ... 2.5 mm²)
connectable conductor cross-section for main contacts finely stranded with core end processing	0.5 ... 2.5 mm²
Safety related data	
proportion of dangerous failures with high demand rate according to SN 31920	73 %
B10 value with high demand rate according to SN 31920	1 000 000
Electrical Safety	
protection class IP on the front according to IEC 60529	IP20
touch protection on the front according to IEC 60529	finger-safe, for vertical contact from the front
Approvals Certificates	

General Product Approval					**For use in hazard-ous locations**
CE EG-Konf.	UKCA	Confirmation	UL	EAC	Ex ATEX

Test Certificates	**Marine / Shipping**

© Copyright Siemens

Special Test Certific-ate

Type Test Certific-ates/Test Report

ABS

BUREAU VERITAS

DNV

LRS

Marine / Shipping	other	Railway	Environment
PRS, RINA, RMRS	Confirmation	Special Test Certific-ate	Environmental Con-firmations

Further information

Information on the packaging
https://support.industry.siemens.com/cs/ww/en/view/109813875
Information- and Downloadcenter (Catalogs, Brochures,…)
https://www.siemens.com/ic10
Industry Mall (Online ordering system)
https://mall.industry.siemens.com/mall/en/en/Catalog/product?mlfb=3RA2115-1GD15-1AP6
Cax online generator
http://support.automation.siemens.com/WW/CAXorder/default.aspx?lang=en&mlfb=3RA2115-1GD15-1AP6
Service&Support (Manuals, Certificates, Characteristics, FAQs,...)
https://support.industry.siemens.com/cs/ww/en/ps/3RA2115-1GD15-1AP6
Image database (product images, 2D dimension drawings, 3D models, device circuit diagrams, EPLAN macros, ...)
http://www.automation.siemens.com/bilddb/cax_de.aspx?mlfb=3RA2115-1GD15-1AP6&lang=en
Characteristic: Tripping characteristics, I²t, Let-through current
https://support.industry.siemens.com/cs/ww/en/ps/3RA2115-1GD15-1AP6/char
Further characteristics (e.g. electrical endurance, switching frequency)
http://www.automation.siemens.com/bilddb/index.aspx?view=Search&mlfb=3RA2115-1GD15-1AP6&objecttype=14&gridview=view1

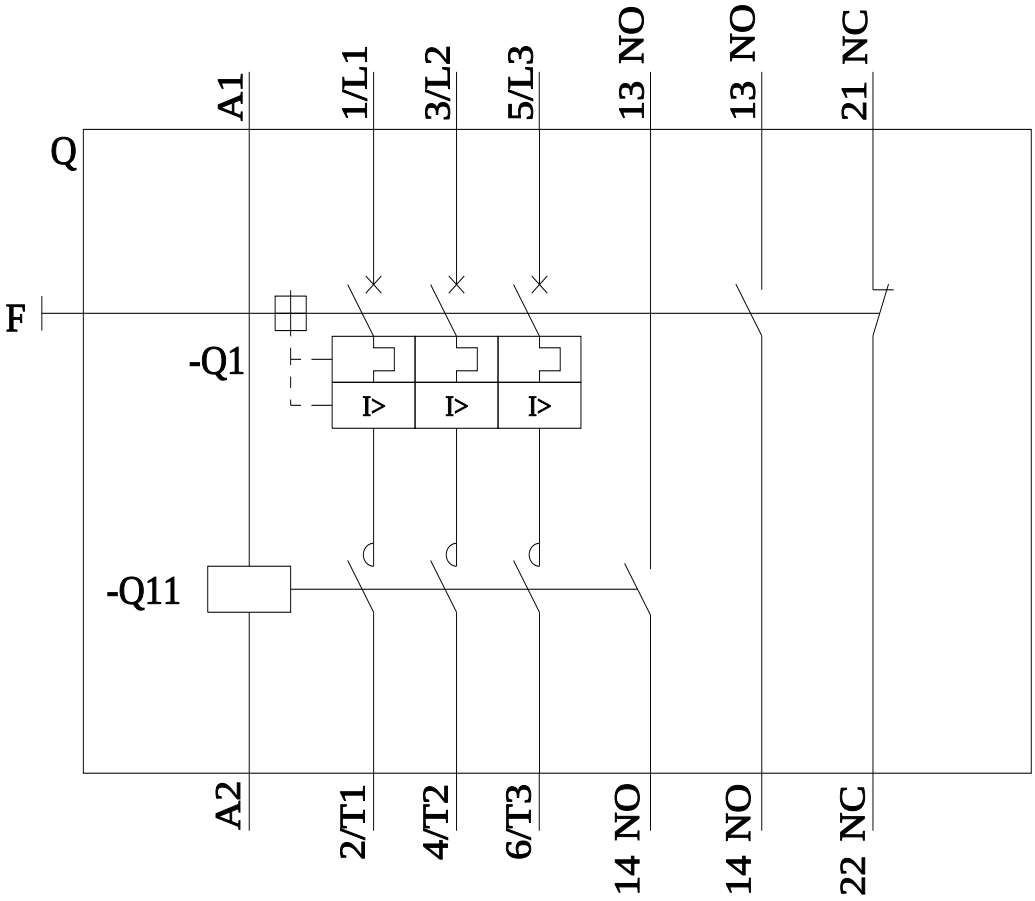

last modified: 12/15/2020

Subject to change without notice
© Copyright Siemens