SIEMENS

Data sheet 3RA2120-1JA24-0AK6



FUSELESS LOAD FEEDER DIRECT START, AC 400V, SZ. S0, 7. . .10A, AC 110/120V 50/60HZ SCREW TERMINAL FOR RAIL MOUNTING, TYPE OF ASSIGNMENT 2,IQ = 150KA (ALSO FULFILLS TYPE OF ASSIGNMENT 1) 1NO+1NC (CONTACTOR)

product brand name	SIRIUS
product designation	non-fused load feeders 3RA2
design of the product	direct starter
manufacturer's article number	
● of the supplied contactor	3RT2024-1AK60
● of the supplied circuit-breakers	3RV2021-1JA10
● of the supplied link module	3RA2921-1AA00
General technical data	
size of the circuit-breaker	S0
size of load feeder	S0
product extension auxiliary switch	Yes
insulation voltage with degree of pollution 3 at AC rated value	690 V
degree of pollution	3
surge voltage resistance rated value	6 kV
shock resistance according to IEC 60068-2-27	6g / 11 ms
mechanical service life (operating cycles) of contactor typical	10 000 000
type of assignment	2
Substance Prohibitance (Date)	10/01/2009
Ambient conditions	
ambient temperature	
● during operation	-20 ... +60 °C
● during storage	-50 ... +80 °C
● during transport	-50 ... +80 °C
Main circuit	
number of poles for main current circuit	3
design of the switching contact	electromechanical
adjustable current response value current of the current-dependent overload release	7 ... 10 A
operating voltage	
● rated value	690 V
● at AC-3 rated value maximum	690 V
operating frequency rated value	50 ... 60 Hz
operational current at AC-3 at 400 V rated value	8.5 A
operating power at AC-3	
● at 400 V rated value	4 000 W
● at 500 V rated value	5 500 W
● at 690 V rated value	7 500 W
Control circuit/ Control	
control supply voltage at AC	
● at 50 Hz rated value	110 V

Subject to change without notice
© Copyright Siemens

● at 60 Hz rated value	120 V
apparent holding power of magnet coil at AC	8.5 VA
Protective and monitoring functions	
trip class	CLASS 10
design of the overload release	thermal (bimetallic)
response value current of instantaneous short-circuit trip unit	130 A
UL/CSA ratings	
full-load current (FLA) for 3-phase AC motor	
● at 480 V rated value	7.92 A
● at 600 V rated value	9.19 A
yielded mechanical performance [hp]	
● for single-phase AC motor	
— at 110/120 V rated value	0.5 hp
— at 230 V rated value	1.5 hp
● for 3-phase AC motor	
— at 200/208 V rated value	2 hp
— at 220/230 V rated value	3 hp
— at 460/480 V rated value	5 hp
— at 575/600 V rated value	7.5 hp
Short-circuit protection	
product function short circuit protection	Yes
design of the short-circuit trip	magnetic
conditional short-circuit current (Iq)	
● at 690 V according to IEC 60947-4-1 rated value	4 000 A
● at 400 V according to IEC 60947-4-1 rated value	153 000 A
● at 500 V according to IEC 60947-4-1 rated value	42 000 A
Installation/ mounting/ dimensions	
mounting position	vertical
fastening method	screw and snap-on mounting onto 35 mm DIN rail
height	193.1 mm
width	45 mm
depth	97.1 mm
required spacing	
● for grounded parts	
— forwards	10 mm
— backwards	0 mm
— upwards	30 mm
— at the side	9 mm
— downwards	10 mm
● for live parts	
— forwards	10 mm
— backwards	0 mm
— upwards	30 mm
— downwards	10 mm
— at the side	9 mm
Connections/ Terminals	
type of electrical connection for main current circuit	screw-type terminals
type of connectable conductor cross-sections for main contacts stranded	1 ... 10 mm², 2x (2.5 ... 6 mm²)
connectable conductor cross-section for main contacts finely stranded with core end processing	1 ... 6 mm²
Safety related data	
B10 value with high demand rate according to SN 31920	1 000 000
proportion of dangerous failures with high demand rate according to SN 31920	73 %
protection class IP on the front according to IEC 60529	IP20
touch protection on the front according to IEC 60529	finger-safe, for vertical contact from the front
Certificates/ approvals	

General Product Approval	For use in hazard-ous locations	Declaration of Conformity

Subject to change without notice
© Copyright Siemens

Confirmation

Test Certificates		Marine / Shipping			
Type Test Certificates/Test Report	Special Test Certificate	ABS	BUREAU VERITAS	LRS	PRS

Marine / Shipping			other	Railway
RINA	RMRS	DNV·GL	Confirmation	Vibration and Shock

Further information

Siemens has decided to exit the Russian market (see here).
https://press.siemens.com/global/en/pressrelease/siemens-wind-down-russian-business

Siemens is working on the renewal of the current EAC certificates.
Please contact your local Siemens office on the status of validity of the EAC certification if you intend to import or offer to supply these products to an EAC relevant market (other than the sanctioned EAEU member states Russia or Belarus).

Information on the packaging
https://support.industry.siemens.com/cs/ww/en/view/109813875

Information- and Downloadcenter (Catalogs, Brochures,…)
https://www.siemens.com/ic10

Industry Mall (Online ordering system)
https://mall.industry.siemens.com/mall/en/en/Catalog/product?mlfb=3RA2120-1JA24-0AK6

Cax online generator
http://support.automation.siemens.com/WW/CAXorder/default.aspx?lang=en&mlfb=3RA2120-1JA24-0AK6

Service&Support (Manuals, Certificates, Characteristics, FAQs,...)
https://support.industry.siemens.com/cs/ww/en/ps/3RA2120-1JA24-0AK6

Image database (product images, 2D dimension drawings, 3D models, device circuit diagrams, EPLAN macros, ...)
http://www.automation.siemens.com/bilddb/cax_de.aspx?mlfb=3RA2120-1JA24-0AK6&lang=en

Characteristic: Tripping characteristics, I²t, Let-through current
https://support.industry.siemens.com/cs/ww/en/ps/3RA2120-1JA24-0AK6/char

Further characteristics (e.g. electrical endurance, switching frequency)
http://www.automation.siemens.com/bilddb/index.aspx?view=Search&mlfb=3RA2120-1JA24-0AK6&objecttype=14&gridview=view1

Subject to change without notice
© Copyright Siemens

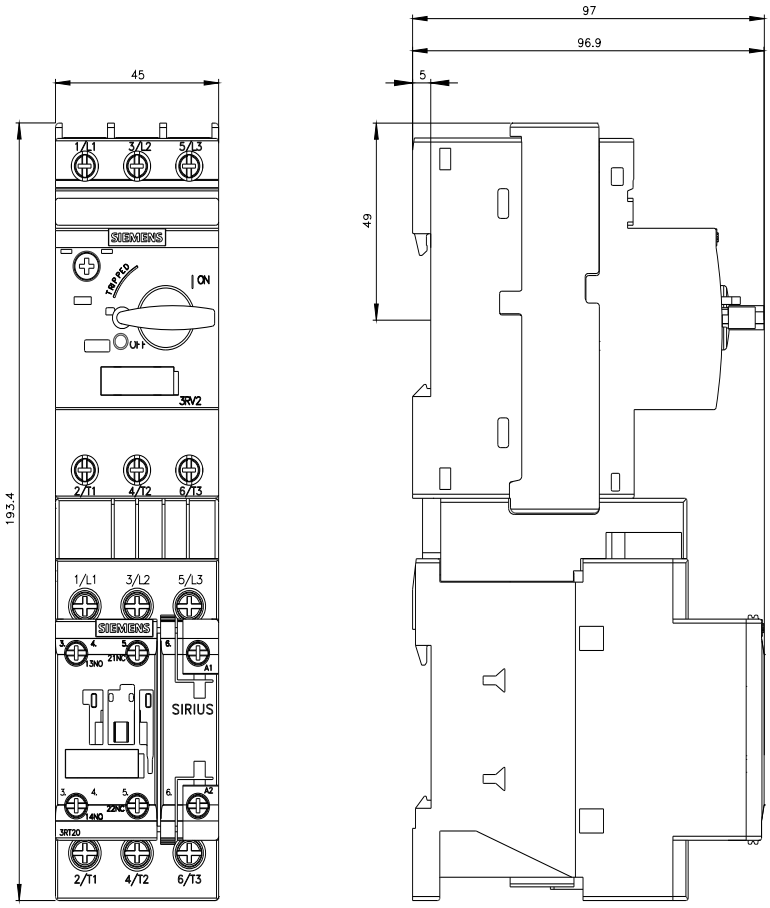

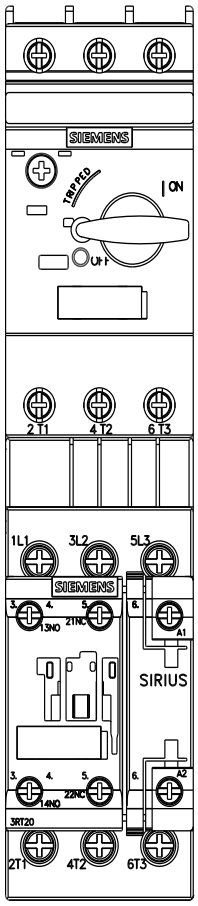

Subject to change without notice
© Copyright Siemens

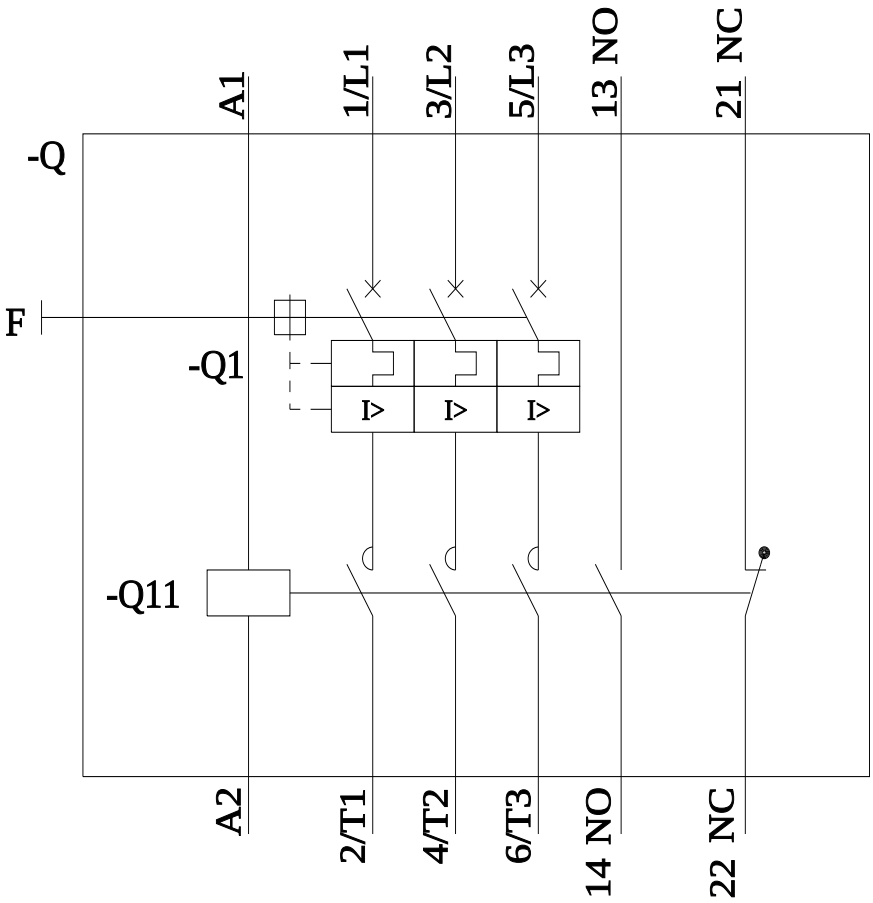

last modified: 11/21/2022

Subject to change without notice
© Copyright Siemens