SIEMENS

Data sheet 3RK1308-0AC00-0CP0



Direct-on-line starter High Feature; Electronic switching; Electronic overload protection up to 1.1 kW / 400 V; Adjustment range 0.9 .. 3 A; PROFIenergy; Option: 3DI/LC module

product brand name	SIMATIC
product category	Motor starter
product designation	Direct-on-line starter
product type designation	ET 200SP
General technical data	
equipment variant according to IEC 60947-4-2	3
product function	Direct-on-line starter
● on-site operation	Yes
● intrinsic device protection	Yes
● remote firmware update	Yes
● for power supply reverse polarity protection	Yes
insulation voltage rated value	500 V
degree of pollution	2
overvoltage category	III
surge voltage resistance rated value	6 kV
maximum permissible voltage for protective separation	
● between main and auxiliary circuit	500 V
shock resistance	6g / 11 ms
vibration resistance	15 mm to 6 Hz; 2g to 500 Hz
operating frequency maximum	1 1/s
mechanical service life (operating cycles) of the main contacts typical	30 000 000
type of assignment	1
utilization category	
● according to IEC 60947-4-2	AC-53a: 3 A: (8-0,7: 70-32)
● according to IEC 60947-4-3	AC-51: 3 A: (1,2-10: 50-360)
reference code according to IEC 81346-2	Q
Substance Prohibitance (Date)	04/15/2016
product function	
● direct start	Yes
● reverse starting	No
product component motor brake output	No
product function short circuit protection	Yes
design of short-circuit protection	fuse
maximum short-circuit current breaking capacity (Icu)	
● at 400 V rated value	55 kA
● at 500 V rated value	55 kA
● at 500 V according to UL 60947 rated value	100 kA
maximum short-circuit current breaking capacity (Icu) in the IT network	
● at 400 V rated value	55 kA

Subject to change without notice
© Copyright Siemens

● at 500 V rated value	55 kA
Electromagnetic compatibility	
EMC emitted interference according to IEC 60947-1	class A
EMC immunity according to IEC 60947-1	Class A
conducted interference	
● due to burst according to IEC 61000-4-4	2 kV
● due to conductor-earth surge according to IEC 61000-4-5	2 kV
● due to conductor-conductor surge according to IEC 61000-4-5	1 kV
● due to high-frequency radiation according to IEC 61000-4-6	Class A
field-based interference according to IEC 61000-4-3	10 V/m
electrostatic discharge according to IEC 61000-4-2	8 kV air discharge
conducted HF interference emissions according to CISPR11	Class A for industrial environment
field-bound HF interference emission according to CISPR11	Class A for industrial environment
Safety related data	
safe state	Load circuit open
MTBF	48 a
protection class IP on the front according to IEC 60529	IP20
touch protection on the front according to IEC 60529	finger-safe
Main circuit	
number of poles for main current circuit	3
design of the switching contact	Hybrid
adjustable current response value current of the current-dependent overload release	0.9 ... 3 A
minimum load [%]	50 %; from smallest adjustable rated current
type of the motor protection	solid-state
operating voltage rated value	48 ... 500 V
relative symmetrical tolerance of the operating voltage	10 %
operating frequency 1 rated value	50 Hz
operating frequency 2 rated value	60 Hz
relative symmetrical tolerance of the operating frequency	5 %
relative positive tolerance of the operating frequency	5 %
relative negative tolerance of the operating frequency	5 %
operational current at AC at 400 V rated value	3 A
ampacity when starting maximum	30 A
operating power for 3-phase motors at 400 V at 50 Hz	0.37 ... 1.1 kW
Inputs/ Outputs	
number of digital inputs	4
● note	4 via 3DI/LC module
Supply voltage	
type of voltage of the supply voltage	DC
supply voltage 1 at DC rated value	
● minimum permissible	20.4 V
● maximum permissible	28.8 V
supply voltage at DC rated value	24 V
consumed current for rated value of supply voltage	
● in standby mode of operation	85 mA
● during operation	140 mA
● at switching on of motor	230 mA
power loss [W] for rated value of supply voltage	
● in switching state OFF with bypass circuit	2 W
● in switching state ON with bypass circuit	3.4 W
inrush current peak at 24 V	25 A; Observe the manual for group configuration
duration of inrush current peak at 24 V	0.145 ms
Response times	
ON-delay time	20 ms
OFF-delay time	35 ... 50 ms
Power Electronics	
operational current	

Subject to change without notice
© Copyright Siemens

● at 40 °C rated value	3 A
● at 50 °C rated value	3 A
● at 55 °C rated value	3 A
● at 60 °C rated value	3 A
Installation/ mounting/ dimensions	
mounting position	Vertical, horizontal (observe derating)
fastening method	pluggable in BaseUnit
height	142 mm
width	30 mm
depth	150 mm
required spacing with side-by-side mounting	
● upwards	50 mm
● downwards	50 mm
Ambient conditions	
installation altitude at height above sea level maximum	4 000 m; For derating see manual
ambient temperature	
● during operation	-25 ... +60 °C; For derating see manual
● during storage	-40 ... +70 °C
● during transport	-40 ... +70 °C
environmental category during operation according to IEC 60721	3K6 (no formation of ice, no condensation), 3C3 (no salt mist), 3S2 (sand must not get into the devices)
relative humidity during operation	10 ... 95 %
air pressure according to SN 31205	900 ... 1 060 hPa
Communication/ Protocol	
protocol is supported	
● PROFIBUS DP protocol	Yes
● PROFINET protocol	Yes
product function bus communication	Yes
protocol is supported AS-Interface protocol	No
product function	
● supports PROFIenergy measured values	Yes
● supports PROFIenergy shutdown	Yes
address space memory of address range	
● of the inputs	4 byte
● of the outputs	2 byte
type of electrical connection of the communication interface	Plug contact to Base Unit
Connections/ Terminals	
type of electrical connection	
● 1 for digital input signals	Pluggable module - accessory
type of electrical connection	
● for main energy infeed	Plug contact to Base Unit
● for load-side outgoing feeder	Plug contact to Base Unit
● for supply voltage line-side	Plug contact to Base Unit
wire length for motor unshielded maximum	200 m
UL/CSA ratings	
full-load current (FLA) for 3-phase AC motor at 480 V rated value	3 A
yielded mechanical performance [hp]	
● for single-phase AC motor	
— at 110/120 V rated value	0.1 hp
— at 230 V rated value	0.25 hp
● for 3-phase AC motor	
— at 200/208 V rated value	0.5 hp
— at 220/230 V rated value	0.5 hp
— at 460/480 V rated value	1.5 hp
operating voltage at AC at 60 Hz according to CSA and UL rated value	480 V
Certificates/ approvals	
General Product Approval	**EMC**

Subject to change without notice
© Copyright Siemens

Confirmation

Declaration of Conformity	Test Certificates	Marine / Shipping
	Type Test Certificates/Test Report	

Marine / Shipping	other
	Confirmation

Further information

Siemens has decided to exit the Russian market (see here).
https://press.siemens.com/global/en/pressrelease/siemens-wind-down-russian-business

Siemens is working on the renewal of the current EAC certificates.
Please contact your local Siemens office on the status of validity of the EAC certification if you intend to import or offer to supply these products to an EAC relevant market (other than the sanctioned EAEU member states Russia or Belarus).

Information on the packaging
https://support.industry.siemens.com/cs/ww/en/view/109813875

Information- and Downloadcenter (Catalogs, Brochures,…)
https://www.siemens.com/ic10

Industry Mall (Online ordering system)
https://mall.industry.siemens.com/mall/en/en/Catalog/product?mlfb=3RK1308-0AC00-0CP0

Cax online generator
http://support.automation.siemens.com/WW/CAXorder/default.aspx?lang=en&mlfb=3RK1308-0AC00-0CP0

Service&Support (Manuals, Certificates, Characteristics, FAQs,...)
https://support.industry.siemens.com/cs/ww/en/ps/3RK1308-0AC00-0CP0

Image database (product images, 2D dimension drawings, 3D models, device circuit diagrams, EPLAN macros, ...)
http://www.automation.siemens.com/bilddb/cax_de.aspx?mlfb=3RK1308-0AC00-0CP0&lang=en

© Copyright Siemens

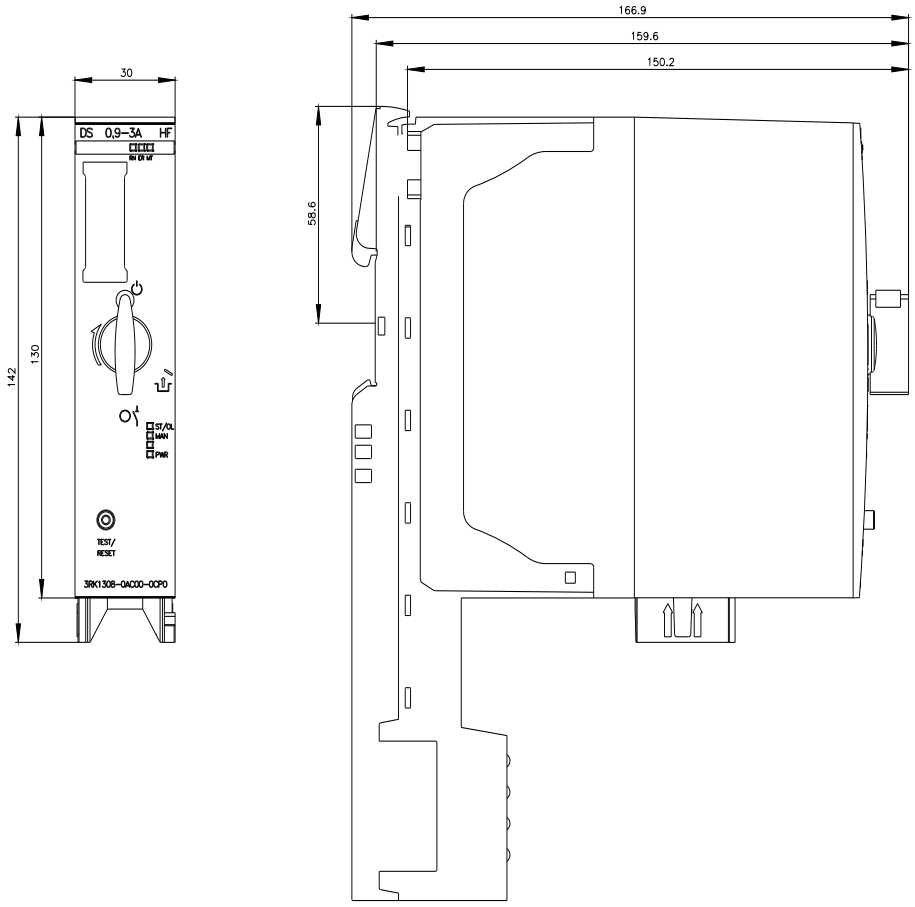

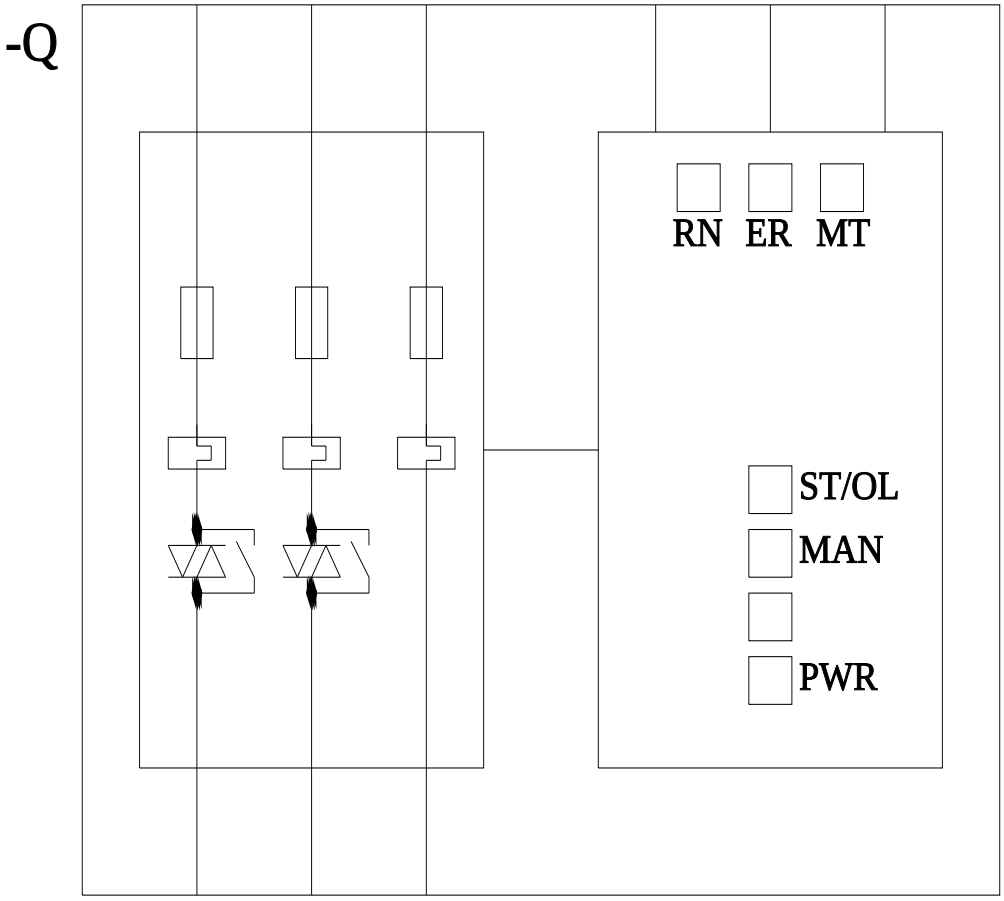

last modified: 10/22/2021

Subject to change without notice
© Copyright Siemens

© Copyright Siemens