CP2200/1

SINGLE-CHIP ETHERNET CONTROLLER

Ethernet Controller
- Integrated IEEE 802.3 MAC and 10 BASE-T PHY
- Fully compatible with 100/1000 BASE-T networks
- Full/Half duplex with auto-negotiation
- Automatic polarity detection and correction
- Automatic retransmission on collision
- Automatic padding and CRC generation
- Supports broadcast and multi-cast MAC addressing

Parallel Host Interface (30 Mbps Transfer Rate)
- 8-bit multiplexed or non-multiplexed mode
- Only 11 I/O pins required in multiplexed mode
- Intel® or Motorola® Bus Format
- Interrupt on received packets and Wake-on-LAN

8 kB Flash Memory
- 8192 bytes ISP non-volatile memory
- Factory pre-programmed unique 48-bit MAC Address
- No external EEPROM required

Other Features
- LED output drivers (Link/Activity)
- Dedicated 2 kB RAM transmit buffer and 4 kB RAM receive FIFO buffer
- Power-on Reset
- 5 V Tolerant I/O

Software Support
- Royalty-free TCP/IP stack with device drivers
- TCP/IP Stack Configuration Wizard
- Hardware diagnostic software and example code

Example Applications
- Remote sensing and monitoring
- Inventory management
- VoIP phone adapters
- Point-of-sale devices
- Network clocks
- Embedded Web Server
- Remote Ethernet-to-UART bridge

Supply Voltage
- 3.1 to 3.6 V

Package
- Pb-free 48-pin TQFP (9x9 mm footprint)
- Pb-free 28-pin QFN (5x5 mm footprint)

Ordering Part Number
- CP2200-GQ (48-pin)
- CP2201-GM (28-pin)

Temperature Range: –40 to +85 °C

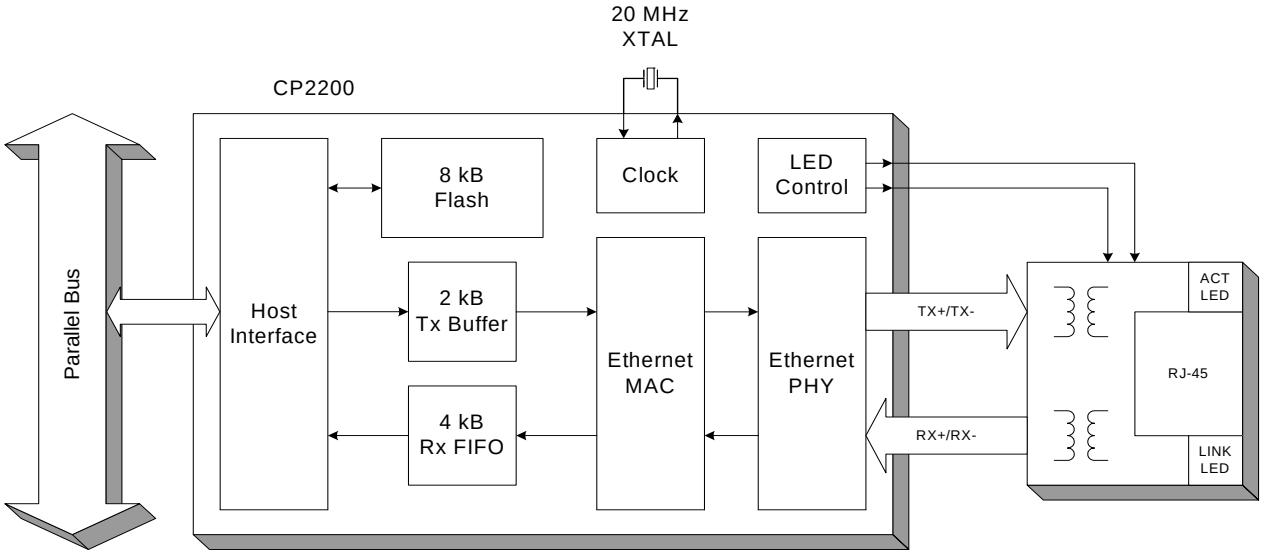

Figure 1. Example System Diagram

Copyright © 2007 by Silicon Laboratories

TABLE OF CONTENTS

Section **Page**

1. System Overview 5
2. Typical Connection Diagram 6
3. Absolute Maximum Ratings 8
4. Electrical Characteristics 9
5. Pinout and Package Definitions 10
6. Functional Description 18
6.1. Overview 18
6.2. Reset Initialization 18
6.3. Interrupt Request Signal 18
6.4. Clocking Options 19
6.5. LED Control 21
6.6. Sending and Receiving Packets 22
7. Internal Memory and Registers 23
7.1. Random Access to RAM Transmit and Receive Buffers 23
7.2. Internal Registers 25
8. Interrupt Sources 30
9. Reset Sources 37
9.1. Power-On Reset 38
9.2. Power-fail 39
9.3. Oscillator-Fail Reset 39
9.4. External Pin Reset 39
9.5. Software Reset 40
9.6. Determining the Source of the Last Reset 41
9.7. De-Selecting Interrupt Sources 42
10. Power Modes 43
10.1. Normal Mode 44
10.2. Link Detection Mode 44
10.3. Memory Mode 44
10.4. Shutdown Mode 44
10.5. Disabling Secondary Device Functions 45
11. Transmit Interface 47
11.1. Overview 47
11.2. Transmitting a Packet 48
11.3. Overriding Transmit Configuration Options 48
11.4. Transmit Buffer and AutoWrite Interface 48
11.5. Transmit Status and Control Registers 49
12. Receive Interface 58
12.1. Overview 58
12.2. Reading a Packet Using the Autoread Interface 58
12.3. Timing and Buffer Overflow Considerations 58
12.4. Initializing the Receive Buffer, Filter and Hash Table 59

12.5. Receive Status and Control Registers 60
12.6. Advanced Receive Buffer Operation 66
12.7. Receive Buffer Advanced Status and Control Registers 67
13. Flash Memory 73
13.1. Programming the Flash Memory 73
13.2. Reading the Flash Memory 74
13.3. Flash Access Registers 75
14. Media Access Controller (MAC) 78
14.1. Initializing the MAC 78
14.2. Accessing the Indirect MAC Registers 78
14.3. Indirect MAC Register Descriptions 80
15. Physical Layer (PHY) 88
15.1. Auto-Negotiation and Duplex Mode 88
15.2. Auto-Negotiation Synchronization 88
15.3. Loopback Mode 89
15.4. Link Integrity Function 89
15.5. Receiver Smart Squelch and Automatic Polarity Correction 89
15.6. Transmitter Jabber Function 89
15.7. Initializing the Physical Layer 90
16. Parallel Interface 96
16.1. Non-Multiplexed Intel Format 96
16.2. Multiplexed Intel Format 98
16.3. Non-Multiplexed Motorola Format 100
16.4. Multiplexed Motorola Format 102
17. Revision-Specific Behavior 104
17.1. Revision Identification 104
17.2. MAC Address Filtering 105
Document Change List 106

1. System Overview

The CP2200/1 is a single-chip Ethernet controller containing an integrated IEEE 802.3 Ethernet Media Access Controller (MAC), 10BASE-T Physical Layer (PHY), and 8 kB Non-Volatile Flash Memory available in a compact 5 x 5 mm QFN-28 package (sometimes called “MLF” or “MLP”) and a 48-pin TQFP package. The CP2200/1 can add Ethernet connectivity to any microcontroller or host processor with 11 or more Port I/O pins. The 8-bit parallel interface bus supports both Intel and Motorola bus formats in multiplexed and non-multiplexed mode. The data transfer rate in non-multiplexed mode can exceed 30 Mbps.

The on-chip Flash memory may be used to store user constants, web server content, or as general purpose non-volatile memory. The Flash is factory preprogrammed with a unique 48-bit MAC address stored in the last six memory locations. Having a unique MAC address stored in the CP2200/1 often removes the serialization step from the product manufacturing process of most embedded systems.

The CP2200/1 has four power modes with varying levels of functionality that allow the host processor to manage the overall system power consumption. The optional interrupt pin also allows the host to enter a “sleep” mode and awaken when a packet is received or when the CP2200/1 is plugged into a network. Auto-negotiation allows the device to automatically detect the most efficient duplex mode (half/full duplex) supported by the network.

The Ethernet Development Kit (Ethernet-DK) bundles a C8051F120 MCU Target Board, CP2200 Ethernet Development Board (AB4), the Silicon Laboratories IDE, all necessary debug hardware, and a TCP/IP Configuration Wizard. The Ethernet Development Kit includes all hardware, software, and examples necessary to design an embedded system using the CP2200. The CP2200 Ethernet Development Board is also compatible with the C8051F020TB and C8051F340TB. Individual target boards may be purchased online by visiting www.silabs.com.

2. Typical Connection Diagram

Figure 2 and Figure 3 show typical connection diagrams for the 48-pin CP2200 and 28-pin CP2201.

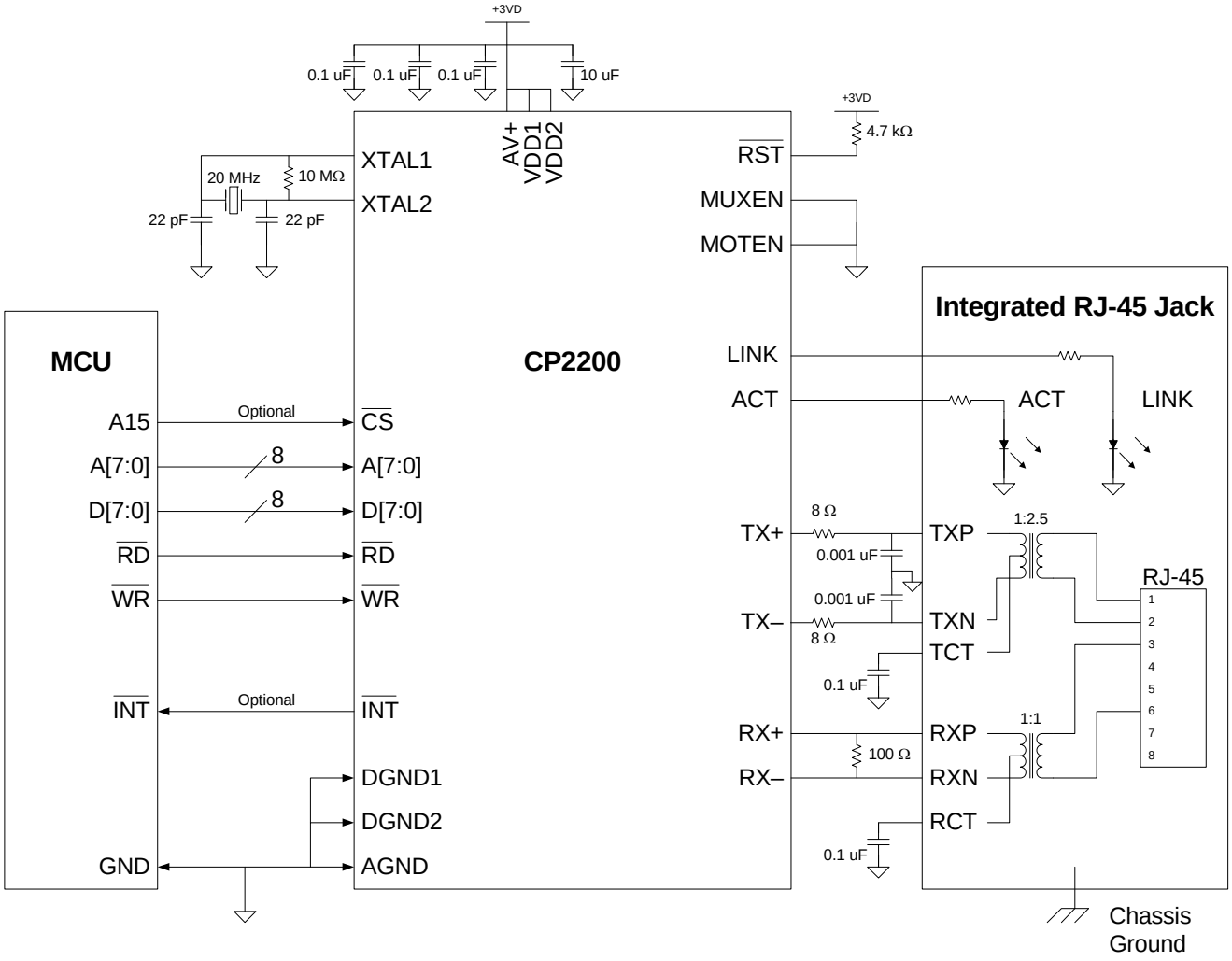

Note: The CP220x should be placed within 1 inch of the transformer for optimal performance.

Figure 2. Typical Connection Diagram (Non-Multiplexed)

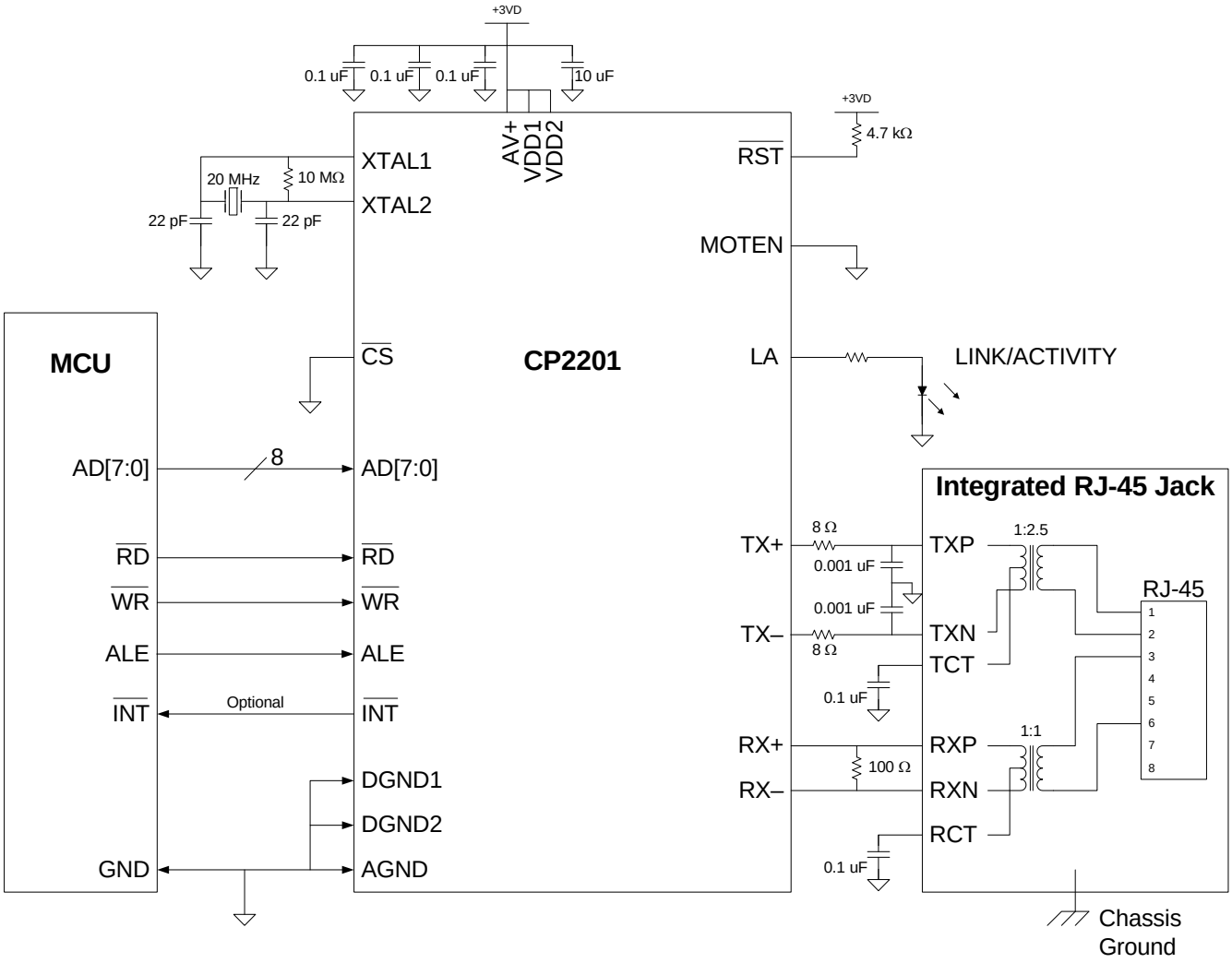

Note: The CP220x should be placed within 1 inch of the transformer for optimal performance.

Figure 3. Typical Connection Diagram (Multiplexed)

3. Absolute Maximum Ratings

Table 1. Absolute Maximum Ratings

Parameter	Conditions	Min	Typ	Max	Units
Ambient temperature under bias		–55	—	125	°C
Storage Temperature		–65	—	150	°C
Voltage on any I/O Pin or $\overline{\text{RST}}$ with respect to GND		–0.3	—	5.8	V
Voltage on V_{DD} with respect to GND		–0.3	—	4.2	V
Maximum Total current through V_{DD} and GND		—	—	500	mA
Maximum output current sunk by $\overline{\text{RST}}$ or any I/O pin		—	—	100	mA

Note: Stresses above those listed may cause permanent damage to the device. This is a stress rating only, and functional operation of the devices at or exceeding the conditions in the operation listings of this specification is not implied. Exposure to maximum rating conditions for extended periods may affect device reliability.

4. Electrical Characteristics

Table 2. Global DC Electrical Characteristics

V_{DD} = 3.1 to 3.6 V, –40 to +85 °C unless otherwise specified.

Parameter	Conditions	Min	Typ	Max	Units
Supply Voltage		3.1	3.3	3.6	V
Supply Current in Normal Mode (Transmitting)	V_{DD} = 3.3 V	—	75	155	mA
Supply Current in Normal Mode (No Network Traffic)	V_{DD} = 3.3 V	—	60	—	mA
Supply Current with Transmitter and Receiver Disabled (Memory Mode)	V_{DD} = 3.3 V	—	47	—	mA
Supply Current in Reset	V_{DD} = 3.3 V	—	15	—	mA
Supply Current in Shutdown Mode	V_{DD} = 3.3 V	—	6.5	—	mA
Specified Operating Temperature Range		–40	—	+85	°C

Table 3. Digital I/O DC Electrical Characteristics

V_{DD} = 3.1 to 3.6 V, –40 to +85 °C unless otherwise specified.

Parameters	Conditions	Min	Typ	Max	UNITS
Output High Voltage (V_{OH})	I_{OH} = –3 mA I_{OH} = –10 µA I_{OH} = –10 mA	V_{DD} – 0.7 V_{DD} – 0.1 —	— — V_{DD} – 0.8	— — —	V
Output Low Voltage (V_{OL})	I_{OL} = 8.5 mA I_{OL} = 10 µA I_{OL} = 25 mA	— — —	— — 1.0	0.6 0.1 —	V
Input High Voltage (V_{IH})		2.0	—	—	V
Input Low Voltage (V_{IL})		—	—	0.8	V
Input Leakage Current		—	25	50	µA

5. Pinout and Package Definitions

Table 4. CP2200/1 Pin Definitions

Name	Pin Numbers		Type	Description
	48-pin	28-pin		
AV+	5	3	Power In	3.1–3.6 V Analog Power Supply Voltage Input.
AGND	4	2		Analog Ground
V_{DD1}	13	8	Power In	3.1–3.6 V Digital Power Supply Voltage Input.
DGND1	14	9		Digital Ground
V_{DD2}	30	19	Power In	3.1–3.6 V Digital Power Supply Voltage Input.
DGND2	31	20		Digital Ground
$\overline{RST}$	15	10	D I/O	Device Reset. Open-drain output of internal POR and V_{DD} monitor. An external source can initiate a system reset by driving this pin low for at least 15 µs.
LINK	3*	—	D Out	Link LED. Push-pull output driven high when valid 10BASE-T link pulses are detected (Link Good) and driven low when valid 10BASE-T link pulses are not detected (Link Fail).
ACT	2*	—	D Out	Activity LED. Push-pull output driven high for 50 ms when any packet is transmitted or received and driven low all other times.
LA	—	1*	D Out	Link or Activity LED. Push-pull output driven high when valid link pulses are detected (Link Good) and driven low otherwise (Link Fail). The output is toggled for each packet transmitted or received, then returns to its original state after 50 ms.
XTAL1	46	28	A In	Crystal Input. This pin is the return for the external oscillator driver. This pin can be overdriven by an external CMOS clock.
XTAL2	45*	27*	A Out	Crystal Output. This pin is the excitation driver for a quartz crystal.
TX+	9	6	A Out	10BASE-T Transmit, Differential Output (Positive).
TX–	10	7	A Out	10BASE-T Transmit, Differential Output (Negative).
RX+	7	5	A In	10BASE-T Receive, Differential Input (Positive).
RX–	6	4	A In	10BASE-T Receive, Differential Input (Negative).
MOTEN	43	26	D In	Motorola Bus Format Enable. This pin should be tied directly to V_{DD} for Motorola bus format or directly to GND for Intel bus format.
MUXEN	44	—	D In	Multiplexed Bus Enable. This pin should be tied directly to V_{DD} for multiplexed bus mode or directly to GND for non-multiplexed bus mode.
$\overline{INT}$	42	25	D Out	Interrupt Service Request. This pin provides notification to the host.

***Note:** Pins can be left unconnected when not used.

Table 4. CP2200/1 Pin Definitions (Continued)

Name	Pin Numbers		Type	Description
	48-pin	28-pin		
$\overline{CS}$	41	24	D In	Device Chip Select.
$\overline{RD}$/(DS)	39	22	D In	Read Strobe (Intel Mode) or Data Strobe (Motorola Mode)
$\overline{WR}$/(R/$\overline{W}$)	40	23	D In	Write Strobe (Intel Mode) or Read/Write Strobe (Motorola Mode)
D0/AD0	16	11	D I/O	Bit 0, Non-Multiplexed Data Bus or Multiplexed Address/Data Bus
D1/AD1	17	12	D I/O	Bit 1, Non-Multiplexed Data Bus or Multiplexed Address/Data Bus
D2/AD2	18	13	D I/O	Bit 2, Non-Multiplexed Data Bus or Multiplexed Address/Data Bus
D3/AD3	19	14	D I/O	Bit 3, Non-Multiplexed Data Bus or Multiplexed Address/Data Bus
D4/AD4	20	15	D I/O	Bit 4, Non-Multiplexed Data Bus or Multiplexed Address/Data Bus
D5/AD5	21	16	D I/O	Bit 5, Non-Multiplexed Data Bus or Multiplexed Address/Data Bus
D6/AD6	22	17	D I/O	Bit 6, Non-Multiplexed Data Bus or Multiplexed Address/Data Bus
D7/AD7	23	18	D I/O	Bit 7, Non-Multiplexed Data Bus or Multiplexed Address/Data Bus
A0	27*	—	D In	Bit 0, Non-Multiplexed Address Bus
A1	28*	—	D In	Bit 1, Non-Multiplexed Address Bus
A2	29*	—	D In	Bit 2, Non-Multiplexed Address Bus
A3/ALE/(AS)	32	—	D In	Bit 3, Non-Multiplexed Address Bus ALE Strobe (Multiplexed Intel Mode) Address Strobe (Multiplexed Motorola Mode)
ALE/(AS)	—	21	D In	ALE Strobe (Intel Mode) Address Strobe (Motorola Mode)
A4	33*	—	D In	Bit 4, Parallel Interface Non-Multiplexed Address Bus
A5	34*	—	D In	Bit 5, Parallel Interface Non-Multiplexed Address Bus
A6	37*	—	D In	Bit 6, Parallel Interface Non-Multiplexed Address Bus
A7	38*	—	D In	Bit 7, Parallel Interface Non-Multiplexed Address Bus
NC	1, 8, 11,12 24–26 35,36 47, 48	—		These pins should be left unconnected or tied to V_{DD}.
***Note:** Pins can be left unconnected when not used.				

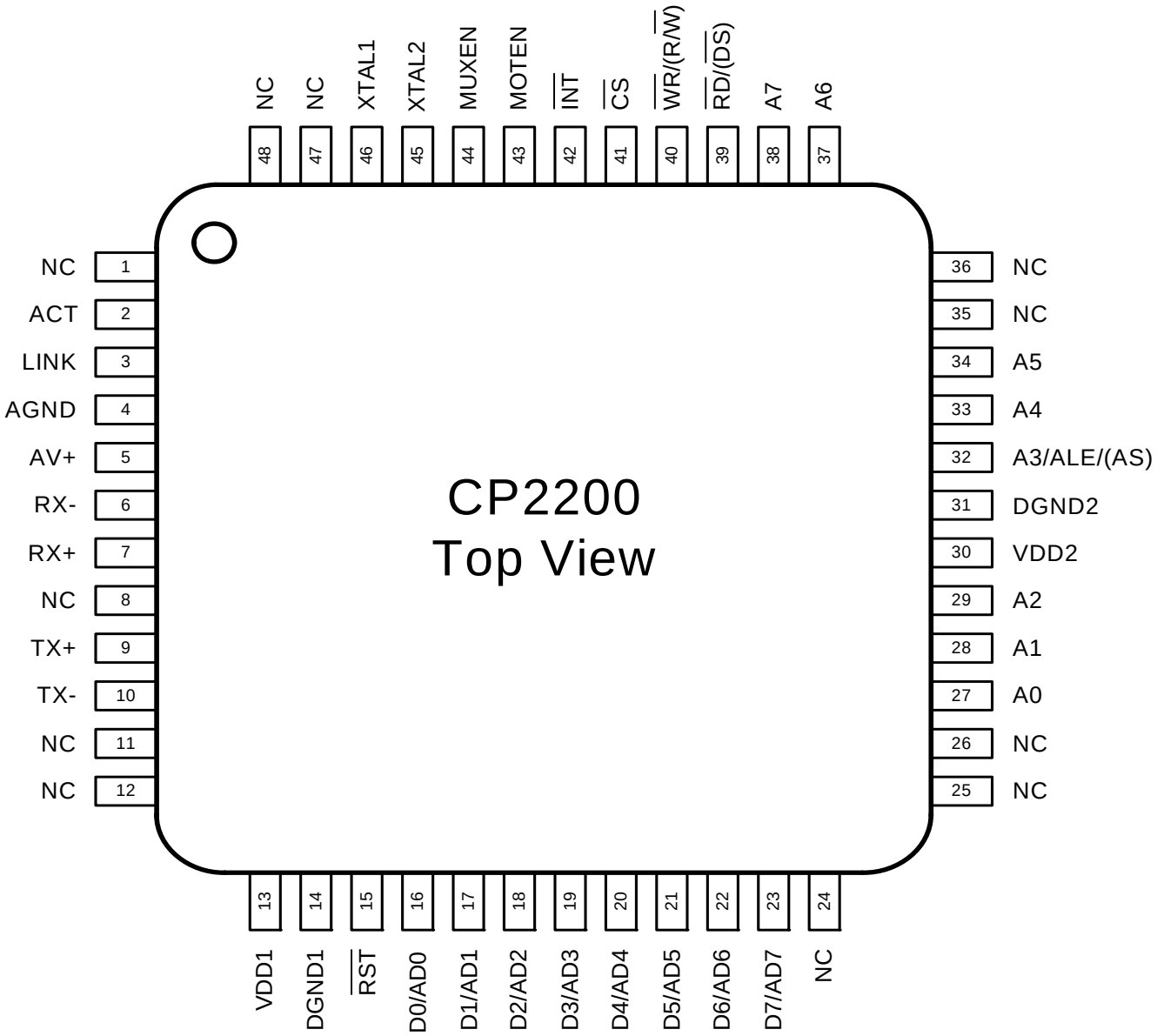

Figure 4. 48-pin TQFP Pinout Diagram

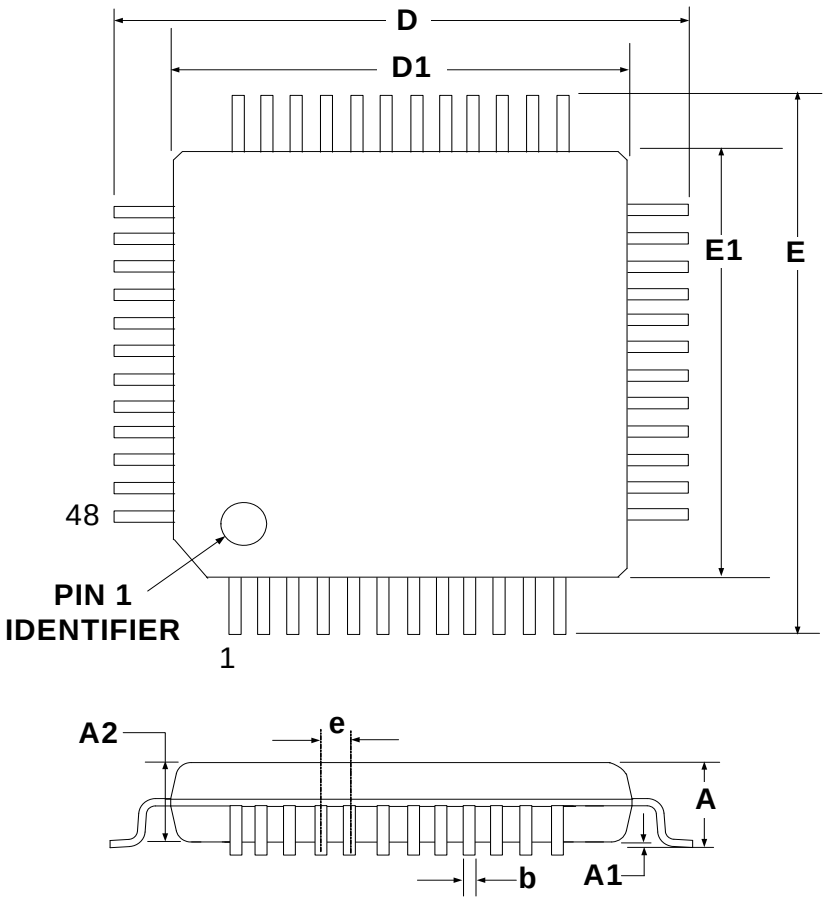

Table 5. TQFP-48 Package Dimensions

	MM		
	Min	Typ	Max
A	—	—	1.20
A1	0.05	—	0.15
A2	0.95	1.00	1.05
b	0.17	0.22	0.27
D	—	9.00	—
D1	—	7.00	—
E	—	9.00	—
e	—	0.50	—
E1	—	7.00	—

Figure 5. 48-pin TQFP Package Dimensions

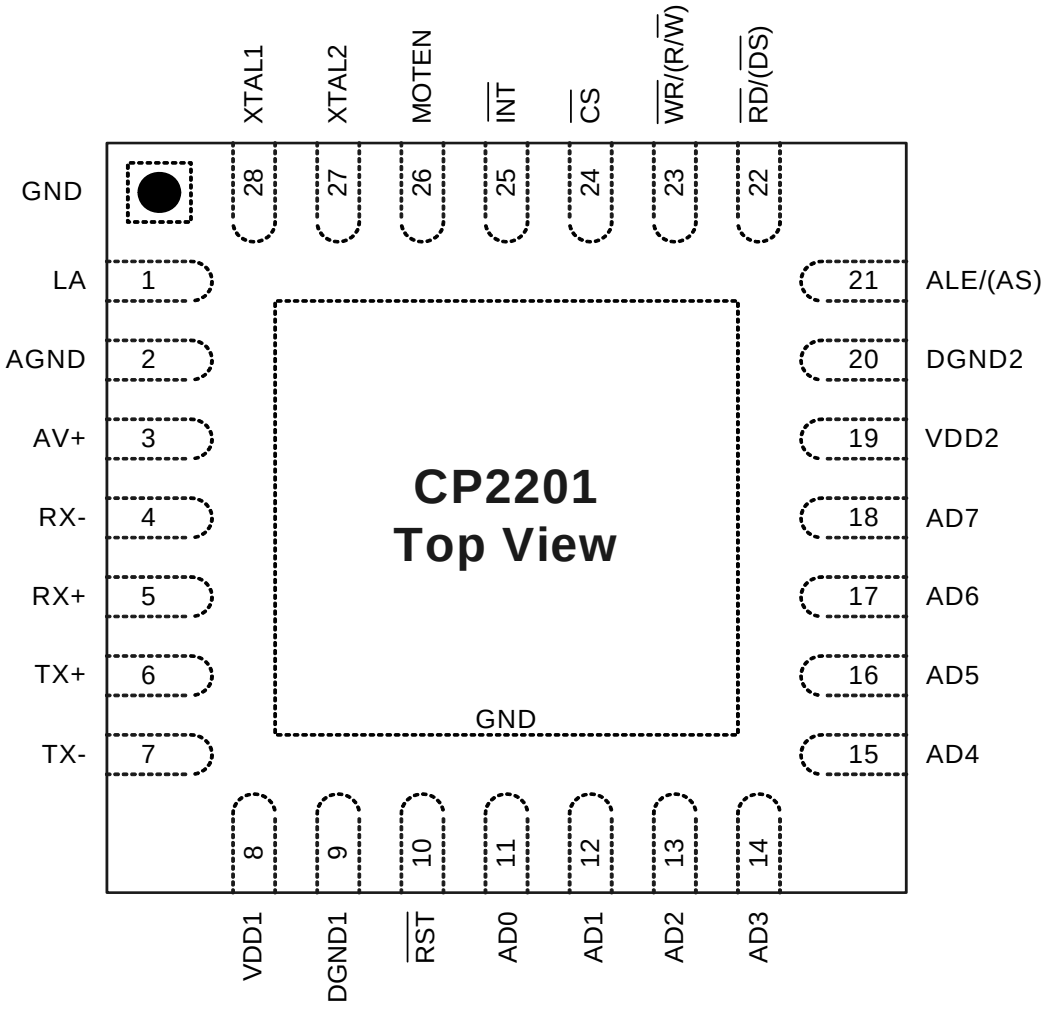

Figure 6. QFN-28 Pinout Diagram (Top View)

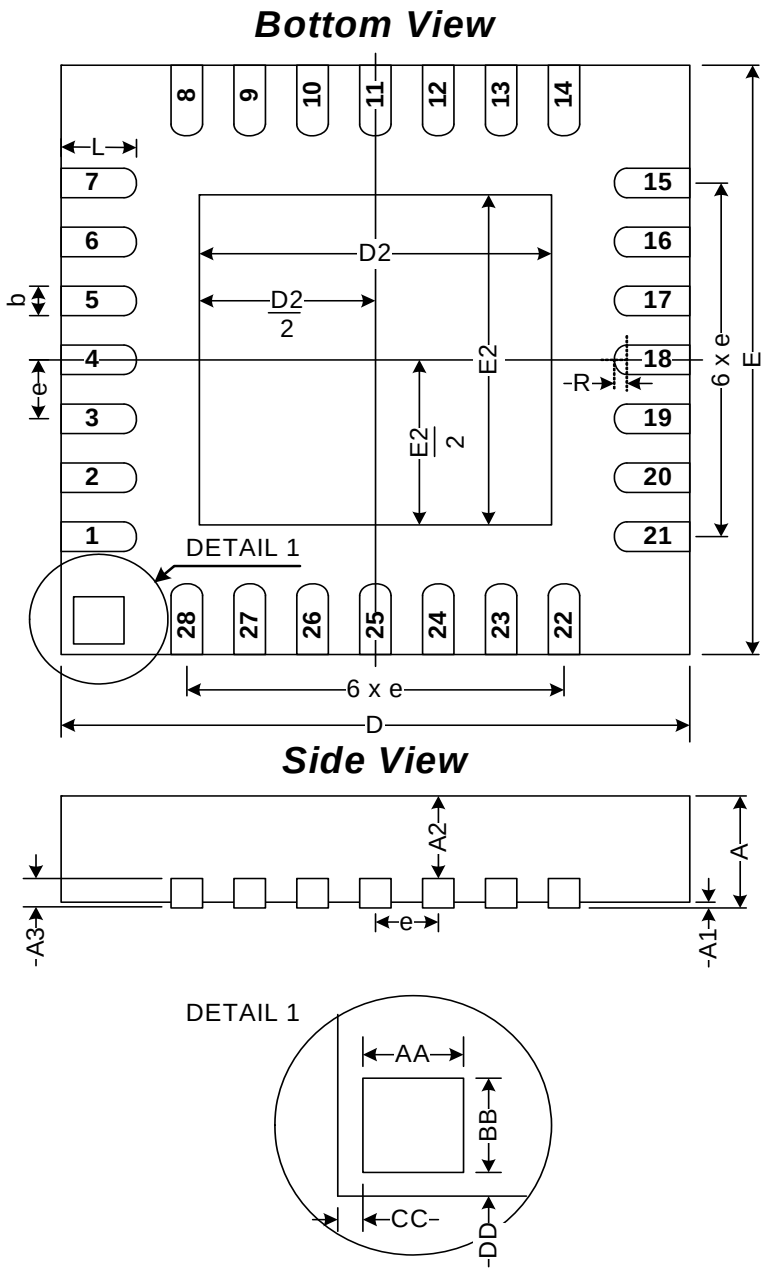

Figure 7. QFN-28 Package Drawing

Table 6. QFN-28 Package Dimensions

	MM		
	Min	Typ	Max
A	0.80	0.90	1.00
A1	0	0.02	0.05
A2	0	0.65	1.00
A3	—	0.25	—
b	0.18	0.23	0.30
D	—	5.00	—
D2	2.90	3.15	3.35
E	—	5.00	—
E2	2.90	3.15	3.35
e	—	0.5	—
L	0.45	0.55	0.65
N	—	28	—
ND	—	7	—
NE	—	7	—
R	0.09	—	—
AA	—	0.435	—
BB	—	0.435	—
CC	—	0.18	—
DD	—	0.18	—

Top View

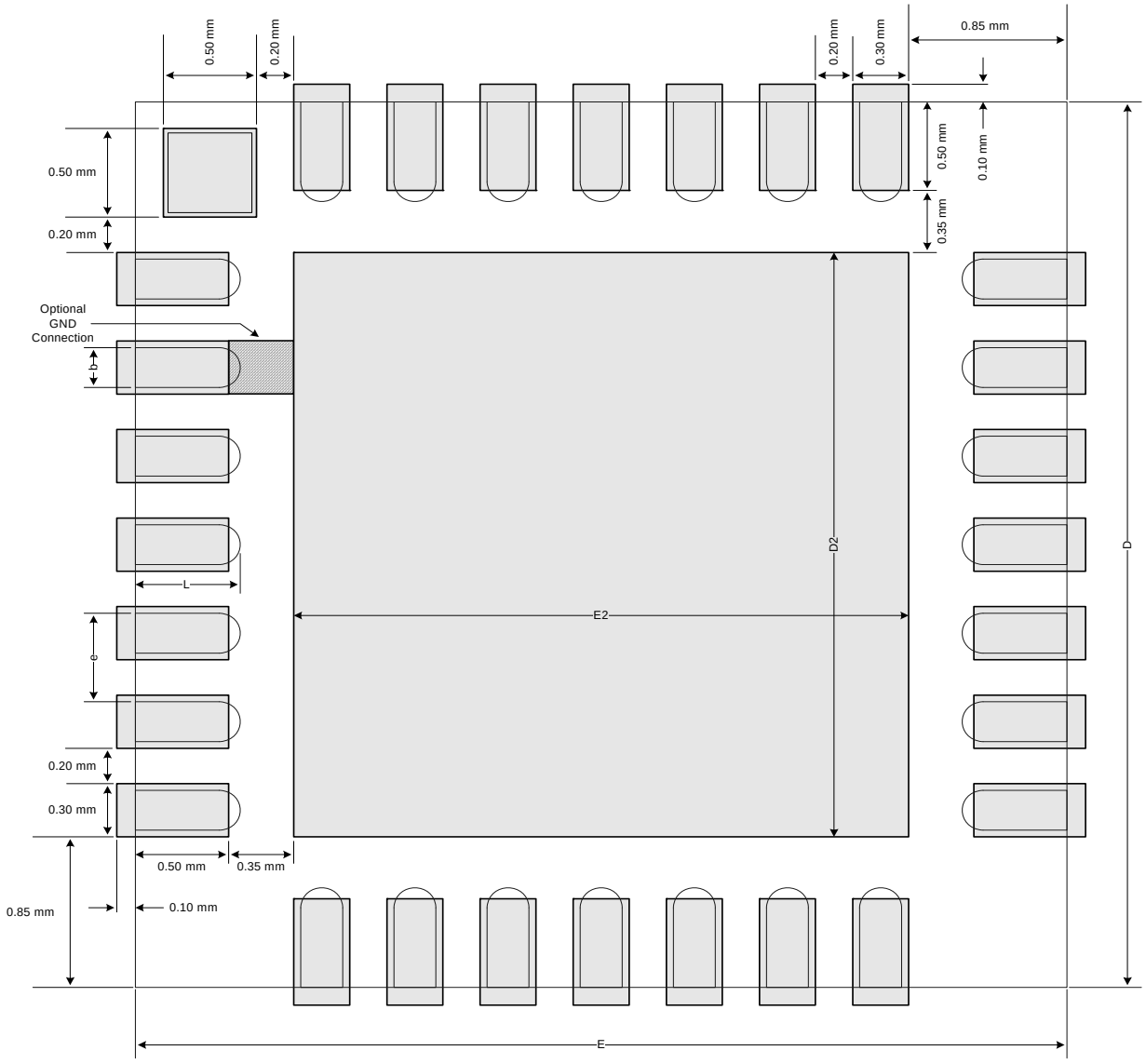

Figure 8. Typical QFN-28 Landing Diagram

Top View

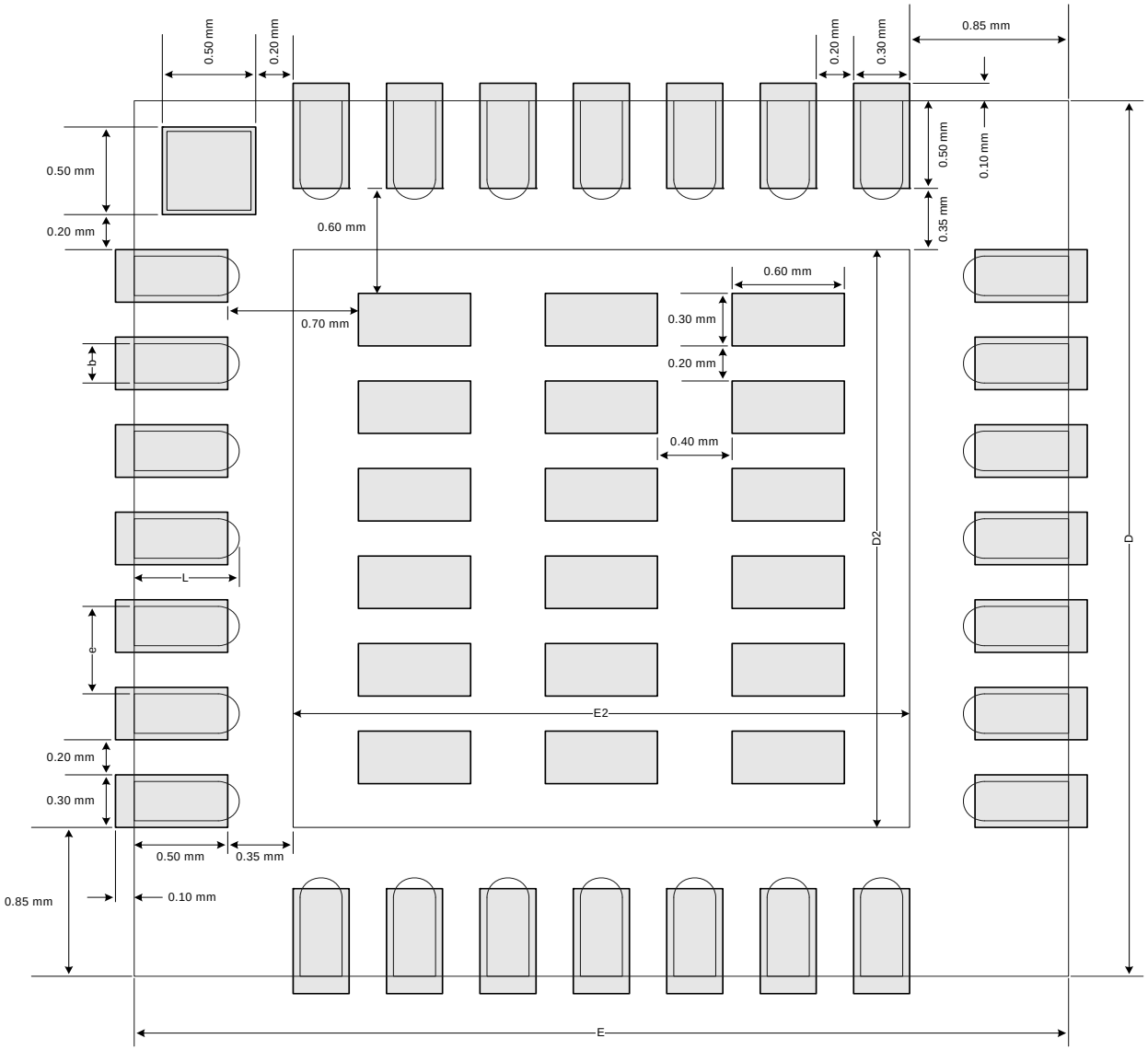

Figure 9. Typical QFN-28 Solder Paste Diagram

6. Functional Description

6.1. Overview

In most systems, the CP2200/1 is used for transmitting and receiving Ethernet packets, non-volatile data storage, and controlling Link and Activity LEDs. The device is controlled using direct and indirect internal registers accessible through the parallel host interface. All digital pins on the device are 5 V tolerant.

6.2. Reset Initialization

After every CP2200/1 reset, the following initialization procedure is recommended to ensure proper device operation:

Step 1: Wait for the reset pin to rise. This step takes the longest during a power-on reset.

Step 2: Wait for Oscillator Initialization to complete. The host processor will receive notification through the interrupt request signal once the oscillator has stabilized.

Step 3: Wait for Self Initialization to complete. The INT0 interrupt status register on page 31 should be checked to determine when Self Initialization completes.

Step 4: Disable interrupts (using INT0EN and INT1EN on page 33 and page 36) for events that will not be monitored or handled by the host processor. By default, all interrupts are enabled after every reset.

Step 5: Initialize the physical layer. See “15.7. Initializing the Physical Layer” on page 90 for a detailed physical layer initialization procedure.

Step 6: Enable the desired Activity, Link, or Activity/Link LEDs using the IOPWR register on page 45.

Step 7: Initialize the media access controller (MAC). See “14.1. Initializing the MAC” on page 78 for a detailed MAC initialization procedure.

Step 8: Configure the receive filter. See “12.4. Initializing the Receive Buffer, Filter and Hash Table” on page 59 for a detailed initialization procedure.

Step 9: The CP2200/1 is ready to transmit and receive packets.

6.3. Interrupt Request Signal

The CP2200/1 has an interrupt request signal ($\overline{\text{INT}}$) that can be used to notify the host processor of pending interrupts. The $\overline{\text{INT}}$ signal is asserted upon detection of any enabled interrupt event. Host processors that cannot dedicate a port pin to the $\overline{\text{INT}}$ signal can periodically poll the interrupt status registers to see if any interrupt generating events have occurred. If the /INT signal is not used, pending interrupts such a Receive FIFO Full must still be serviced.

The 14 interrupt sources are listed below. Interrupts are enabled on reset and can be disabled by software. Pending interrupts can be cleared (allowing the $\overline{\text{INT}}$ signal to de-assert) by reading the self-clearing interrupt registers. See “8. Interrupt Sources” on page 30 for a complete description of the CP2200/1 interrupts.

- End of Packet Reached
- Receive FIFO Empty
- Receive FIFO Full
- Oscillator Initialization Complete
- Self Initialization Complete
- Flash Write/Erase Complete
- Packet Transmitted
- Packet Received
- “Wake-on-LAN” Wakeup Event
- Link Status Changed
- Jabber Detected
- Auto-Negotiation Failed
- Remote Fault Notification
- Auto-Negotiation Complete

6.4. Clocking Options

The CP2200/1 can be clocked from an external parallel-mode crystal oscillator or CMOS clock. Figure 10 and Figure 11 show typical connections for both clock source types. If a crystal oscillator is chosen to clock the device, the crystal is started once the device is released from reset and remains on until the device reenters the reset state or loses power.

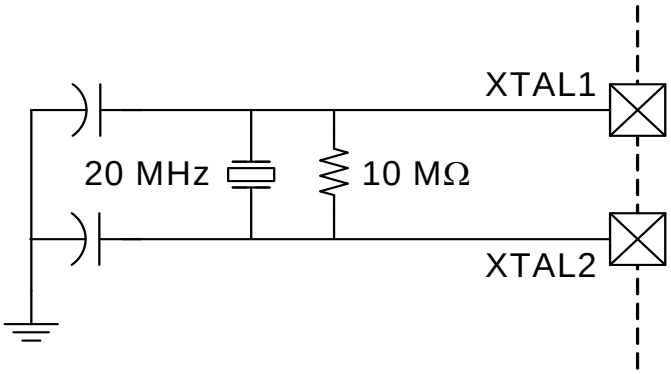

Figure 10. Crystal Oscillator Example

Important note on external crystals: Crystal oscillator circuits are quite sensitive to PCB layout. The crystal should be placed as close as possible to the XTAL pins on the device. The traces should be as short as possible and shielded with a ground plane from any other traces that could introduce noise or interference.

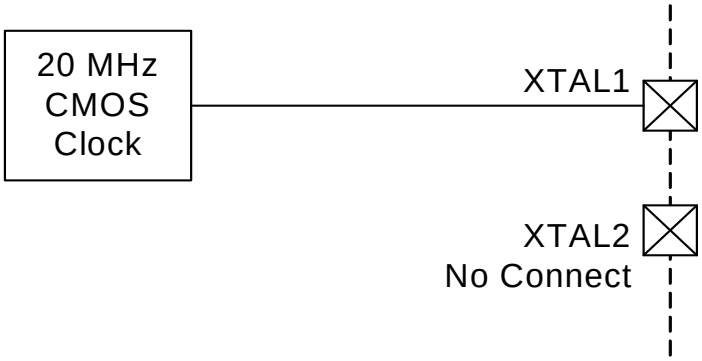

Figure 11. External CMOS Clock Example

Table 7 lists the clocking requirements of the CP2200/1 when using a crystal oscillator or CMOS clock. Table 8 shows the electrical characteristics of the XTAL1 pin. These characteristics are useful when selecting an external CMOS clock.

Table 7. Clocking Requirements

V_{DD} = 3.1 to 3.6 V, –40 to +85 °C unless otherwise specified.

Parameters	Conditions	Min	Typ	Max	UNITS
Frequency		—	20	—	MHz
Frequency Error		—	—	±50	ppm
Duty Cycle		45	50	55	%

Table 8. Input Clock Pin (XTAL1) DC Electrical Characteristics

V_{DD} = 3.1 to 3.6 V, –40 to +85 °C unless otherwise specified.

Parameters	Conditions	Min	Typ	Max	UNITS
XTAL1 Input Low Voltage		—	—	0.7	V
XTAL1 Input High Voltage		2.0	—	—	V

6.5. LED Control

The CP2200/1 can be used to control link status and activity LEDs. The CP2200 (48-pin TQFP) has two push-pull LED drivers that can source up to 10 mA each. The CP2201 (28-pin QFN) has a single push-pull LED driver that turns the LED on or off based on the link status and blinks the LED when activity is detected on a good link. Table 9 shows the function of the LED signals available on the CP2200/1.

Table 9. LED Control Signals

Signal	Device	Description
LINK	CP2200	Asserted when valid link pulses are detected.
ACT	CP2200	Asserted for 50 ms for each packet transmitted or received.
LA	CP2201	Asserted when valid link pulses are detected and toggled for 50 ms for each packet transmitted or received.

Figure 12 shows a typical LED connection for the CP2200. The CP2201 uses an identical connection for the LA (link/activity) pin. The LED drivers are enabled and disabled using the IOPWR register on page 45.

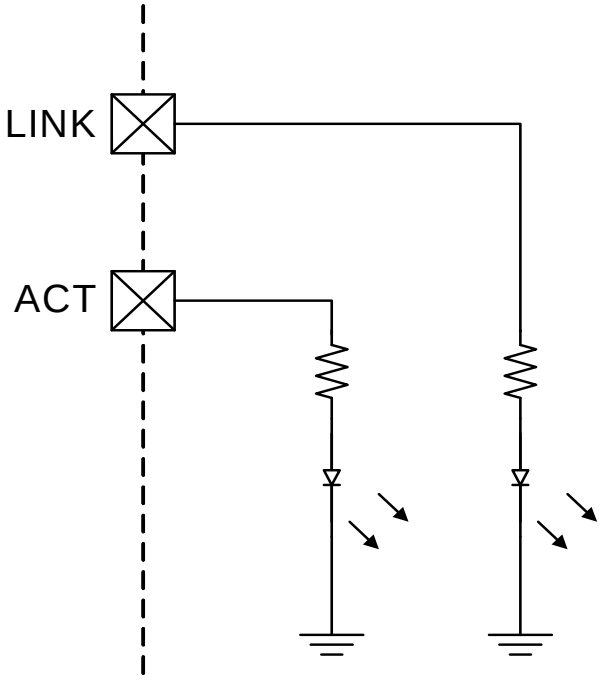

Figure 12. LED Control Example (CP2200)

6.6. Sending and Receiving Packets

After reset initialization is complete, the CP2200/1 is ready to send and receive packets. Packets are sent by loading data into the transmit buffer using the AutoWrite register and writing ‘1’ to TXGO. See “11.2. Transmitting a Packet” on page 48 for detailed information on how to transmit a packet using the transmit interface. A Packet Transmitted interrupt will be generated once transmission is complete.

Packet reception occurs automatically when reception is enabled in the MAC and the receive buffer is not full. Once a packet is received, the host processor is notified by generating a Packet Received interrupt. The host may read the packet using the AutoRead interface. See “12.2. Reading a Packet Using the Autoread Interface” on page 58 and “12.4. Initializing the Receive Buffer, Filter and Hash Table” on page 59 for additional information on using and initializing the receive interface.

7. Internal Memory and Registers

The CP2200/1 is controlled through direct and indirect registers accessible through the parallel host interface. The host interface provides an 8-bit address space, of which there are 114 valid direct register locations (see Table 11 on page 25). All remaining addresses in the memory space are reserved and should not be read or written. The direct registers provide access to the RAM buffers, Flash memory, indirect MAC configuration registers, and other status and control registers for various device functions.

Figure 13 shows the RAM and Flash memory organization. The transmit and receive RAM buffers share the same address space and are both accessed using the RAMADDRH:RAMADDRL pointer. Each of the buffers has a dedicated data register. The Flash memory has a separate address space and a dedicated address pointer and data register. See “13. Flash Memory” on page 73 for detailed information on how to read and write to Flash.

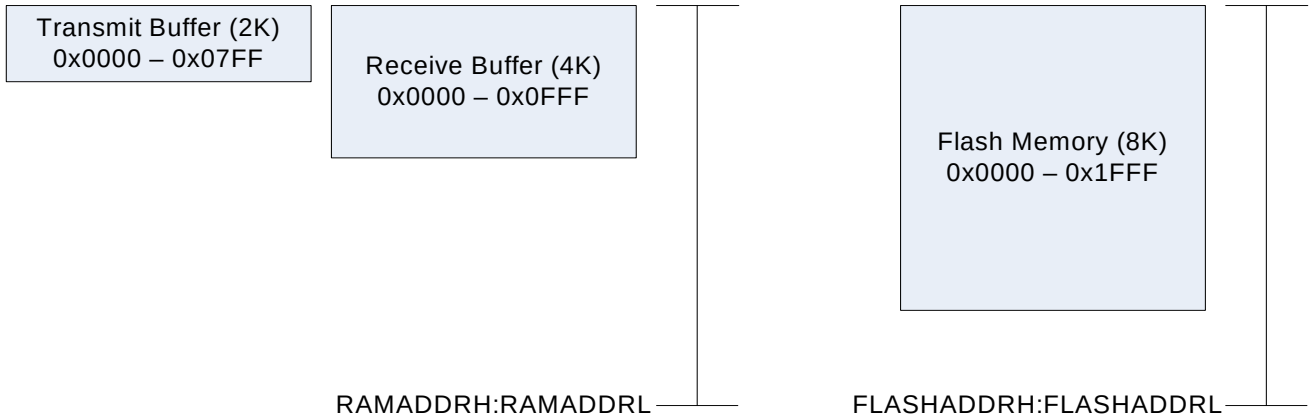

Figure 13. RAM Buffers and Flash Memory Organization

7.1. Random Access to RAM Transmit and Receive Buffers

The most common and most efficient methods for accessing the transmit and receive buffers are the AutoWrite and AutoRead interfaces. These interfaces allow entire packets to be written or read at a time. In very few cases, the transmit and receive buffers may need to be accessed randomly. An example of this is a system in which a specific byte in the packet is checked to determine whether to read the packet or discard it. The following procedure can be used to read or write data to either RAM buffer:

Step 1: Write the address of the target byte to RAMADDRH:RAMADDRL.

Step 2: **Transmit Buffer:**
Read or write 8-bit data to RAMTXDATA to read or write from the target byte in the transmit buffer.

Receive Buffer:
Read or write 8-bit data to RAMRXDATA to read or write from the target byte in the receive buffer.

Note: Reads and writes of the RAM buffers using the random access method are independent of the AutoRead and AutoWrite interfaces. Each of the interfaces has a dedicated set of address and data registers. See “11.2. Transmitting a Packet” on page 48 and “12.2. Reading a Packet Using the Autoread Interface” on page 58 for additional information about the AutoRead and AutoWrite interfaces.

Register 1. RAMADDRH: RAM Address Pointer High Byte

R/W	R/W	R/W	R/W	R/W	R/W	R/W	R/W	Reset Value
								00000000
Bit7	Bit6	Bit5	Bit4	Bit3	Bit2	Bit1	Bit0	Address: 0x08

Bits7–0: RAMADDRH: RAM Address Register High Byte
Holds the most significant eight bits of the target RAM address.

Register 2. RAMADDRL: RAM Address Pointer Low Byte

R/W	R/W	R/W	R/W	R/W	R/W	R/W	R/W	Reset Value
								00000000
Bit7	Bit6	Bit5	Bit4	Bit3	Bit2	Bit1	Bit0	Address: 0x09

Bits7–0: RAMADDRL: RAM Address Register Low Byte
Holds the least significant eight bits of the target RAM address.

Register 3. RAMTXDATA: RAM Transmit Buffer Data Register

R/W	R/W	R/W	R/W	R/W	R/W	R/W	R/W	Reset Value
								00000000
Bit7	Bit6	Bit5	Bit4	Bit3	Bit2	Bit1	Bit0	Address: 0x04

Bits7–0: RAMTXDATA: Transmit Buffer Data Register
Read: Returns data in the transmit buffer at location RAMADDRH:RAMADDRL.
Write: Writes data to the transmit buffer at location RAMADDRH:RAMADDRL.

Register 4. RAMRXDATA: RAM Receive Buffer Data Register

R/W	R/W	R/W	R/W	R/W	R/W	R/W	R/W	Reset Value
								00000000
Bit7	Bit6	Bit5	Bit4	Bit3	Bit2	Bit1	Bit0	Address: 0x02

Bits7–0: RAMRXDATA: Receive Buffer Data Register
Read: Returns data in the receive buffer at location RAMADDRH:RAMADDRL.
Write: Writes data to the receive buffer at location RAMADDRH:RAMADDRL.

7.2. Internal Registers

The CP2200/1 has 114 direct internal registers and 9 indirect registers. The registers are grouped into ten categories based on function. Table 10 lists the register groups and provides links to the detailed register descriptions for each group. Table 11 lists all direct registers available on the device.

Table 10. CP2200/1 Register Groups

RAM Access Registers	Section 7.1 on page 23
Interrupt Status and Control Registers	Section 8 on page 30
Reset Source Registers	Section 9 on page 37
Power Mode Registers	Section 10 on page 43
Transmit Status and Control Registers	Section 11.5 on page 49
Receive Interface Status and Control Registers	Section 12.5 on page 60
Receive Buffer Status and Control Registers	Section 12.7 on page 67
FLASH Access Registers	Section 13.3 on page 75
MAC Access Registers	Section 14.2 on page 78
MAC Indirect Registers	Section 14.3 on page 80
PHY Status and Control Registers	Section 15 on page 88

Table 11. Direct Registers

Register	Address	Description	Page No.
CPADDRH	0x21	Current RX Packet Address High Byte	page 65
CPADDRL	0x22	Current RX Packet Address Low Byte	page 65
CPINFOH	0x1D	Current RX Packet Information High Byte	page 63
CPINFOL	0x1E	Current RX Packet Information Low Byte	page 64
CPLENH	0x1F	Current RX Packet Length High Byte	page 64
CPLENL	0x20	Current RX Packet Length Low Byte	page 64
CPTLB	0x1A	Current RX Packet TLB Number	page 67
FLASHADDRH	0x69	Flash Address Pointer High Byte	page 76
FLASHADDRL	0x68	Flash Address Pointer Low Byte	page 76
FLASHAUTORD	0x05	Flash AutoRead w/ increment	page 77
FLASHDATA	0x06	Flash Read/Write Data Register	page 77
FLASHERASE	0x6A	Flash Erase	page 77
FLASHKEY	0x67	Flash Lock and Key	page 76
FLASHSTA	0x7B	Flash Status	page 75

Table 11. Direct Registers

Register	Address	Description	Page No.
INT0	0x63	Interrupt Status Register 0 (Self-Clearing)	page 31
INT0EN	0x64	Interrupt Enable Register 0	page 33
INT0RD	0x76	Interrupt Status Register 0 (Read-Only)	page 32
INT1	0x7F	Interrupt Status Register 1 (Self-Clearing)	page 34
INT1EN	0x7D	Interrupt Enable Register 1	page 36
INT1RD	0x7E	Interrupt Status Register 1 (Read-Only)	page 35
IOPWR	0x70	Port Input/Output Power	page 45
MACADDR	0x0A	MAC Address Pointer	page 79
MACDATAH	0x0B	MAC Data Register High Byte	page 79
MACDATAL	0x0C	MAC Data Register Low Byte	page 79
MACRW	0x0D	MAC Read/Write Initiate	page 79
OSCPWR	0x7C	Oscillator Power	page 46
PHYCF	0x79	Physical Layer Configuration	page 92
PHYCN	0x78	Physical Layer Control	page 91
PHYSTA	0x80	Physical Layer Status	page 93
RAMADDRH	0x08	RAM Address Pointer High Byte	page 24
RAMADDRL	0x09	RAM Address Pointer Low Byte	page 24
RAMRXDATA	0x02	RXFIFO RAM Data Register	page 24
RAMTXDATA	0x04	TXBUFF RAM Data Register	page 24
RSTEN	0x72	Reset Enable Register	page 42
RSTSTA	0x73	Reset Source Status Register	page 41
RXAUTORD	0x01	RXFIFO AutoRead w/ increment	page 62
RXCN	0x11	Receive Control	page 61
RXFIFOHEADH	0x17	Receive Buffer Head Pointer High Byte	page 71
RXFIFOHEADL	0x18	Receive Buffer Head Pointer Low Byte	page 71
RXFIFOSTA	0x5B	Receive Buffer Status	page 72
RXFIFOTAILH	0x15	Receive Buffer Tail Pointer High Byte	page 71
RXFIFOTAILL	0x16	Receive Buffer Tail Pointer Low Byte	page 71
RXFILT	0x10	Receive Filter Configuration	page 62

Table 11. Direct Registers

Register	Address	Description	Page No.
RXHASHH	0x0E	Receive Hash Table High Byte	page 62
RXHASHL	0x0F	Receive Hash Table Low Byte	page 63
RXSTA	0x12	Receive Status	page 61
SWRST	0x75	Software Reset Register	page 40
TLB0ADDRH	0x27	TLB0 Address High Byte	page 70
TLB0ADDRL	0x28	TLB0 Address Low Byte	page 70
TLB0INFOH	0x23	TLB0 Information High Byte	page 68
TLB0INFOL	0x24	TLB0 Information Low Byte	page 69
TLB0LENH	0x25	TLB0 Length High Byte	page 69
TLB0LENL	0x26	TLB0 Length Low Byte	page 70
TLB1ADDRH	0x2D	TLB1 Address High Byte	page 70
TLB1ADDRL	0x2E	TLB1 Address Low Byte	page 70
TLB1INFOH	0x29	TLB1 Information High Byte	page 68
TLB1INFOL	0x2A	TLB1 Information Low Byte	page 69
TLB1LENH	0x2b	TLB1 Length High Byte	page 69
TLB1LENL	0x2C	TLB1 Length Low Byte	page 70
TLB2ADDRH	0x33	TLB2 Address High Byte	page 70
TLB2ADDRL	0x34	TLB2 Address Low Byte	page 70
TLB2INFOH	0x2F	TLB2 Information High Byte	page 68
TLB2INFOL	0x30	TLB2 Information Low Byte	page 69
TLB2LENH	0x31	TLB2 Length High Byte	page 69
TLB2LENL	0x32	TLB2 Length Low Byte	page 70
TLB3ADDRH	0x39	TLB3 Address High Byte	page 70
TLB3ADDRL	0x3A	TLB3 Address Low Byte	page 70
TLB3INFOH	0x35	TLB3 Information High Byte	page 68
TLB3INFOL	0x36	TLB3 Information Low Byte	page 69
TLB3LENH	0x37	TLB3 Length High Byte	page 69
TLB3LENL	0x38	TLB3 Length Low Byte	page 70
TLB4ADDRH	0x3F	TLB4 Address High Byte	page 70

Table 11. Direct Registers

Register	Address	Description	Page No.
TLB4ADDRL	0x40	TLB4 Address Low Byte	page 70
TLB4INFOH	0x3B	TLB4 Information High Byte	page 68
TLB4INFOL	0x3C	TLB4 Information Low Byte	page 69
TLB4LENH	0x3D	TLB4 Length High Byte	page 69
TLB4LENL	0x3E	TLB4 Length Low Byte	page 70
TLB5ADDRH	0x45	TLB5 Address High Byte	page 70
TLB5ADDRL	0x46	TLB5 Address Low Byte	page 70
TLB5INFOH	0x41	TLB5 Information High Byte	page 68
TLB5INFOL	0x42	TLB5 Information Low Byte	page 69
TLB5LENH	0x43	TLB5 Length High Byte	page 69
TLB5LENL	0x44	TLB5 Length Low Byte	page 70
TLB6ADDRH	0x4B	TLB6 Address High Byte	page 70
TLB6ADDRL	0x4C	TLB6 Address Low Byte	page 70
TLB6INFOH	0x47	TLB6 Information High Byte	page 68
TLB6INFOL	0x48	TLB6 Information Low Byte	page 69
TLB6LENH	0x49	TLB6 Length High Byte	page 69
TLB6LENL	0x4A	TLB6 Length Low Byte	page 70
TLB7ADDRH	0x51	TLB7 Address High Byte	page 70
TLB7ADDRL	0x52	TLB7 Address Low Byte	page 70
TLB7INFOH	0x4D	TLB7 Information High Byte	page 68
TLB7INFOL	0x4E	TLB7 Information Low Byte	page 69
TLB7LENH	0x4F	TLB7 Length High Byte	page 69
TLB7LENL	0x50	TLB7 Length Low Byte	page 70
TLBVALID	0x1C	TLB Valid Indicators	page 68
TXAUTOWR	0x03	Transmit Data AutoWrite	page 53
TXBUSY	0x54	Transmit Busy Indicator	page 51
TXCN	0x53	Transmit Control	page 51
TXENDH	0x57	Transmit Data Ending Address High Byte	page 53
TXENDL	0x58	Transmit Data Ending Address Low Byte	page 53

Table 11. Direct Registers

Register	Address	Description	Page No.
TXPAUSEH	0x55	Transmit Pause High Byte	page 52
TXPAUSEL	0x56	Transmit Pause Low Byte	page 52
TXPWR	0x7A	Transmitter Power	page 46
TXSTA0	0x62	Transmit Status Vector 0	page 57
TXSTA1	0x61	Transmit Status Vector 1	page 56
TXSTA2	0x60	Transmit Status Vector 2	page 56
TXSTA3	0x5F	Transmit Status Vector 3	page 55
TXSTA4	0x5E	Transmit Status Vector 4	page 55
TXSTA5	0x5D	Transmit Status Vector 5	page 54
TXSTA6	0x5C	Transmit Status Vector 6	page 54
TXSTARTH	0x59	Transmit Data Starting Address High Byte	page 52
TXSTARTL	0x5A	Transmit Data Starting Address Low Byte	page 52
VDMCN	0x13	V_{DD} Monitor Control Register	page 39

8. Interrupt Sources

The CP2200/1 can alert the host processor when any of the 14 interrupt source events listed in Table 12 triggers an interrupt. The CP2200/1 alerts the host by setting the appropriate flags in the interrupt status registers and driving the INT pin low. The INT pin will remain asserted until all interrupt flags for enabled interrupts have been cleared by the host. Interrupt flags are cleared by reading the self-clearing interrupt status registers, INT0 and INT1. Interrupts can be disabled by clearing the corresponding bits in INT0EN and INT1EN.

If the host processor does not utilize the INT pin, it can periodically read the interrupt status registers to determine if any interrupt-generating events have occurred. The INT0RD and INT1RD read-only registers provide a method of checking for interrupts without clearing the interrupt status registers.

Table 12. Interrupt Source Events

Event	Description	Pending Flag	Enable Flag
End of Packet	The last byte of a packet has been read from the receive buffer using the AutoRead interface.	INT0.7	INT0EN.7
Receive FIFO Empty	The last packet in the receive buffer has been unloaded or discarded.	INT0.6	INT0EN.6
Self Initialization Complete	The device is ready for Reset Initialization. See “6.2. Reset Initialization” on page 18.	INT0.5	INT0EN.5
Oscillator Initialization Complete	The external oscillator has stabilized.	INT0.4	INT0EN.4
Flash Write/Erase Complete	A Flash write or erase operation has completed.	INT0.3	INT0EN.3
Packet Transmitted	The transmit interface has transmitted a packet.	INT0.2	INT0EN.2
Receive FIFO Full	The receive buffer is full or the maximum number of packets has been exceeded. Decode the RXFIFOSTA status register to determine the receive buffer status.	INT0.1	INT0EN.1
Packet Received	A packet has been added to the receive buffer.	INT0.0	INT0EN.0
“Wake-on-LAN” Wakeup Event	The device has been connected to a network.	INT1.5	INT1EN.5
Link Status Changed	The device has been connected or disconnected from the network.	INT1.4	INT1EN.4
Jabber Detected	The transmit interface has detected and responded to a jabber condition. See IEEE 802.3 for more information about jabber conditions.	INT1.3	INT1EN.3
Auto-Negotiation Failed	An auto-negotiation attempt has failed. Software should check for a valid link and re-try auto-negotiation.	INT1.2	INT1EN.2
Reserved			
Auto-Negotiation Complete	An auto-negotiation attempt has completed. This interrupt only indicates completion, and not success. Occasionally, Auto-Negotiation attempts will not complete and/or fail; therefore, a 3 to 4 second timeout should be implemented. A successful auto-negotiation attempt is one that completes without failure.	INT1.0	INT1EN.0

Register 5. INT0: Interrupt Status Register 0 (Self-Clearing)

RC	RC	RC	RC	RC	RC	RC	RC	Reset Value
EOPINT	RXEINT	SELFINT	OSCINT	FLWEINT	TXINT	RXFINT	RXINT	00000000
Bit7	Bit6	Bit5	Bit4	Bit3	Bit2	Bit1	Bit0	Address: 0x63

Note: Reading this register will clear all INT0 interrupt flags.

Bit 7: EOPINT: End of Packet Interrupt Flag
0: The last byte of a packet has not been read since the last time EOPINT was cleared.
1: The last byte of a packet has been read.

Bit 6: RXEINT: Receive FIFO Empty Interrupt Flag
0: The receive FIFO has not been empty since the last time RXEINT was cleared.
1: The receive FIFO is empty.

Bit 5: SELFINT: Self Initialization Complete Interrupt Flag
0: Self Initialization has not completed since the last time SELFINT was cleared.
1: Self Initialization has completed.

Bit 4: OSCINT: Oscillator Initialization Complete Interrupt Flag
0: Oscillator Initialization has not completed since the last time OSCINT was cleared.
1: Oscillator Initialization has completed.

Bit 3: FLWEINT: Flash Write/Erase Operation Complete Interrupt Flag
0: A Flash write or erase operation has not completed since the last time FLWEINT was cleared.
1: A Flash write or erase operation has completed.

Bit 2: TXINT: Packet Transmitted Interrupt Flag
0: A packet transmission has not completed since the last time TXINT was cleared.
1: A packet has been transmitted.

Bit 1: RXFINT: Receive FIFO Full Interrupt Flag
0: The receive FIFO has not been full since the last time RXFINT was cleared.
1: The receive FIFO is full.

Bit 0: RXINT: Packet Received Interrupt Flag
0: A packet has not been added to the receive buffer since the last time RXINT was cleared.
1: A packet has been added to the receive buffer.

Register 6. INT0RD: Interrupt Status Register 0 (Read-Only)

R	R	R	R	R	R	R	R	Reset Value
EOPINTR	RXEINTR	SELFINTR	OSCINTR	FLWEINTR	TXINTR	RXFINTR	RXINTR	00000000
Bit7	Bit6	Bit5	Bit4	Bit3	Bit2	Bit1	Bit0	Address:
								0x76

Note: Reading this register will not clear INT0 interrupt flags.

Bit 7: EOPINTR: End of Packet Read-Only Interrupt Flag
0: The last byte of a packet has not been read since the last time EOPIF was cleared.
1: The last byte of a packet has been read.

Bit 6: RXEINTR: Receive FIFO Empty Read-Only Interrupt Flag
0: The receive FIFO has not been empty since the last time RXFIFOE was cleared.
1: The receive FIFO is empty.

Bit 5: SELFINTR: Self Initialization Complete Read-Only Interrupt Flag
0: Self Initialization has not completed since the last time SELFINT was cleared.
1: Self Initialization has completed.

Bit 4: OSCINTR: Oscillator Initialization Complete Read-Only Interrupt Flag
0: Oscillator Initialization has not completed since the last time OSCINT was cleared.
1: Oscillator Initialization has completed.

Bit 3: FLWEINTR: Flash Write/Erase Operation Complete Read-Only Interrupt Flag
0: A Flash write or erase operation has not completed since the last time FLWEINT was cleared.
1: A Flash write or erase operation has completed.

Bit 2: TXINTR: Packet Transmitted Read-Only Interrupt Flag
0: A packet transmission has not completed since the last time TXINT was cleared.
1: A packet has been transmitted.

Bit 1: RXFINTR: Receive FIFO Full Read-Only Interrupt Flag
0: The receive FIFO has not been full since the last time RXFINT was cleared.
1: The receive FIFO is full.

Bit 0: RXINTR: Packet Received Read-Only Interrupt Flag
0: A packet has not been added to the receive buffer since the last time RXINT was cleared.
1: A packet has been added to the receive buffer.

Register 7. INT0EN: Interrupt Enable Register 0

R/W	R/W	R/W	R/W	R/W	R/W	R/W	R/W	Reset Value
EEOPINT	ERXEINT	ESELFINT	EOSCINT	EFLWEINT	ETXINT	ERXFINT	ERXINT	00000000
Bit7	Bit6	Bit5	Bit4	Bit3	Bit2	Bit1	Bit0	Address: 0x64

Bit 7: EEOPINT: Enable End of Packet Interrupt
0: Disable End of Packet Interrupt.
1: Enable End of Packet Interrupt.

Bit 6: ERXEINT: Enable Receive FIFO Empty Interrupt
0: Disable Receive FIFO Empty Interrupt.
1: Enable Receive FIFO Empty Interrupt.

Bit 5: ESELFINT: Enable Self Initialization Complete Interrupt
0: Disable Self Initialization Complete Interrupt.
1: Enable Self Initialization Complete Interrupt.

Bit 4: EOSCINT: Enable Oscillator Initialization Complete Interrupt
0: Disable Oscillator Initialization Complete Interrupt.
1: Enable Oscillator Initialization Complete Interrupt.

Bit 3: EFLWEINT: Enable Flash Write/Erase Operation Complete Interrupt
0: Disable Flash Write/Erase Operation Complete Interrupt.
1: Enable Flash Write/Erase Operation Complete Interrupt.

Bit 2: ETXINT: Enable Packet Transmitted Interrupt
0: Disable Packet Transmitted Interrupt.
1: Enable Packet Transmitted Interrupt.

Bit 1: ERXFINT: Enable Receive FIFO Full Interrupt
0: Disable Receive FIFO Full Interrupt.
1: Enable Receive FIFO Full Interrupt.

Bit 0: ERXINT: Enable Packet Received Interrupt
0: Disable Packet Received Interrupt.
1: Enable Packet Received Interrupt.

Register 8. INT1: Interrupt Status Register 1 (Self-Clearing)

R/W	R/W	RC	RC	RC	RC	RC	RC	Reset Value
—	—	WAKEINT	LINKINT	JABINT	Reserved	RFINT	ANCINT	00000000
Bit7	Bit6	Bit5	Bit4	Bit3	Bit2	Bit1	Bit0	Address: 0x7F

Note: Reading this register will clear all INT1 interrupt flags.

Bits 7–6: UNUSED. Read = 00b, Write = don't care.
Bit 5: WAKEINT: "Wake-on-Lan" Interrupt Flag
0: The device has not been connected to a network since the last time WAKEINT was cleared.
1: The device has been connected to a network since the last time WAKEINT was cleared.
Bit 4: LINKINT: Link Status Changed Interrupt Flag
0: The link status has not changed since the last time LINKINT was cleared.
1: The link status has changed (device has been connected or removed from a network).
Bit 3: JABINT: Jabber Detected Interrupt Flag
0: A jabber condition has not been detected since the last time JABINT was cleared.
1: A jabber condition has been detected.
Bit 2: ANFINT: Auto-Negotiation Failed Interrupt Flag
0: Auto-Negotiation has not failed since the last time ANFINT was cleared.
1: Auto-Negotiation has failed.
Bit 1: Reserved: Read = 0.
Bit 0: ANCINT: Auto-Negotiation Complete Interrupt
0: Auto-Negotiation has not completed since the last time ANCINT was cleared.
1: Auto-Negotiation has completed.

Register 9. INT1RD: Interrupt Status Register 1 (Read-Only)

R/W	R/W	R	R	R	R	R	R	Reset Value
—	—	WAKEINTR	LINKINTR	JABINTR	ANFINTR	Reserved	ANCINTR	00000000
Bit7	Bit6	Bit5	Bit4	Bit3	Bit2	Bit1	Bit0	Address:
								0x7E

Note: Reading this register will not clear INT1 interrupt flags.

Bits 7–6: UNUSED. Read = 00b, Write = don't care.
Bit 5: WAKEINTR: "Wake-on-Lan" Read-Only Interrupt Flag
0: The device has not been connected to a network since the last time WAKEINT was cleared.
1: The device has been connected to a network since the last time WAKEINT was cleared.
Bit 4: LINKINTR: Link Status Changed Read-Only Interrupt Flag
0: The link status has not changed since the last time LINKINT was cleared.
1: The link status has changed (device has been connected or removed from a network).
Bit 3: JABINTR: Jabber Detected Read-Only Interrupt Flag
0: A jabber condition has not been detected since the last time JABINT was cleared.
1: A jabber condition has been detected.
Bit 2: ANFINTR: Auto-Negotiation Failed Read-Only Interrupt Flag
0: Auto-Negotiation has not failed since the last time ANFINT was cleared.
1: Auto-Negotiation has failed.
Bit 1: Reserved: Read = 0b.
Bit 0: ANCINTR: Auto-Negotiation Complete Read-Only Interrupt Flag
0: Auto-Negotiation has not completed since the last time ANCINT was cleared.
1: Auto-Negotiation has completed.

Register 10. INT1EN: Interrupt Enable Register 1

R/W	R/W	R/W	R/W	R/W	R/W	R/W	R/W	Reset Value
—	—	EWAKEINT	ELINKINT	EJABINT	EANFINT	Reserved	EANCINT	00000000
Bit7	Bit6	Bit5	Bit4	Bit3	Bit2	Bit1	Bit0	Address: 0x7D

Bits 7–6: UNUSED. Read = 00b, Write = don't care.
Bit 5: EWAKEINT: Enable "Wake-on-Lan" Interrupt
0: Disable "Wake-on-Lan" Interrupt.
1: Enable "Wake-on-Lan" Interrupt.
Bit 4: ELINKINT: Enable Link Status Changed Interrupt
0: Disable Link Status Changed Interrupt.
1: Enable Link Status Changed Interrupt.
Bit 3: EJABINT: Enable Jabber Detected Interrupt
0: Disable Jabber Detected Interrupt.
1: Enable Jabber Detected Interrupt.
Bit 2: EANFINT: Enable Auto-Negotiation Failed Interrupt
0: Disable Auto-Negotiation Failed Interrupt.
1: Enable Auto-Negotiation Failed Interrupt.
Bit 1: Reserved: Read = 0b. Must write 0b.
Bit 0: EANCINT: Enable Auto-Negotiation Complete Interrupt
0: Disable Auto-Negotiation Complete Interrupt.
1: Enable Auto-Negotiation Complete Interrupt.

9. Reset Sources

Reset circuitry allows the CP2200/1 to be easily placed in a predefined default condition. Upon entry to this reset state, the following events occur:

- All direct and indirect registers are initialized to their defined reset values.
- Digital pins (except /RST) are forced into a high impedance state with a weak pull-up to V_{DD}.
- Analog pins (TX+/TX–, RX+/RX–) are forced into a high impedance state without a weak pull-up.
- The external oscillator is stopped and /RST driven low (except on a software reset).
- All interrupts are enabled.

The contents of the transmit and receive buffers are unaffected by a reset as long as the device has maintained sufficient supply voltage. However, since the buffer pointers are reset to their default values, the data is effectively lost unless the host processor has kept track of the starting address and length of each packet in the buffer.

The CP2200/1 has five reset sources that place the device in the reset state. The method of entry to the reset state determines the amount of time spent in reset and the behavior of the /RST pin. Each of the following reset sources is described in the following sections:

- Power-On
- Power-Fail
- Oscillator-Fail
- External /RST Pin
- Software Command

Upon exit from the reset state, the device automatically starts the external oscillator and waits for it to settle (this step is skipped on software reset). Once the crystal oscillator settles, the Oscillator Initialization Complete interrupt occurs (interrupt pin asserted), and the host processor may now access the internal registers to poll for the Self Initialization Complete Interrupt. If the host does not have access to the interrupt signal, it should wait approximately 1 ms after the rising edge of reset pin prior to polling the internal registers. Note that the reset pin could remain low up to 100 ms depending on the power supply ramp time.

The device is fully functional after the Self Initialization has completed. See “6.2. Reset Initialization” on page 18 for the recommended initialization procedure following a device reset.

9.1. Power-On Reset

During power-up, the CP2200/1 is held in the reset state, and the /RST pin is driven low until V_{DD} settles above V_{RST}. A delay ($T_{PORDelay}$) occurs between the time V_{DD} reaches V_{RST} and the time the device is released from reset; the typical delay is 5 ms. Refer to Table 13 for the Electrical Characteristics of the power supply monitor circuit.

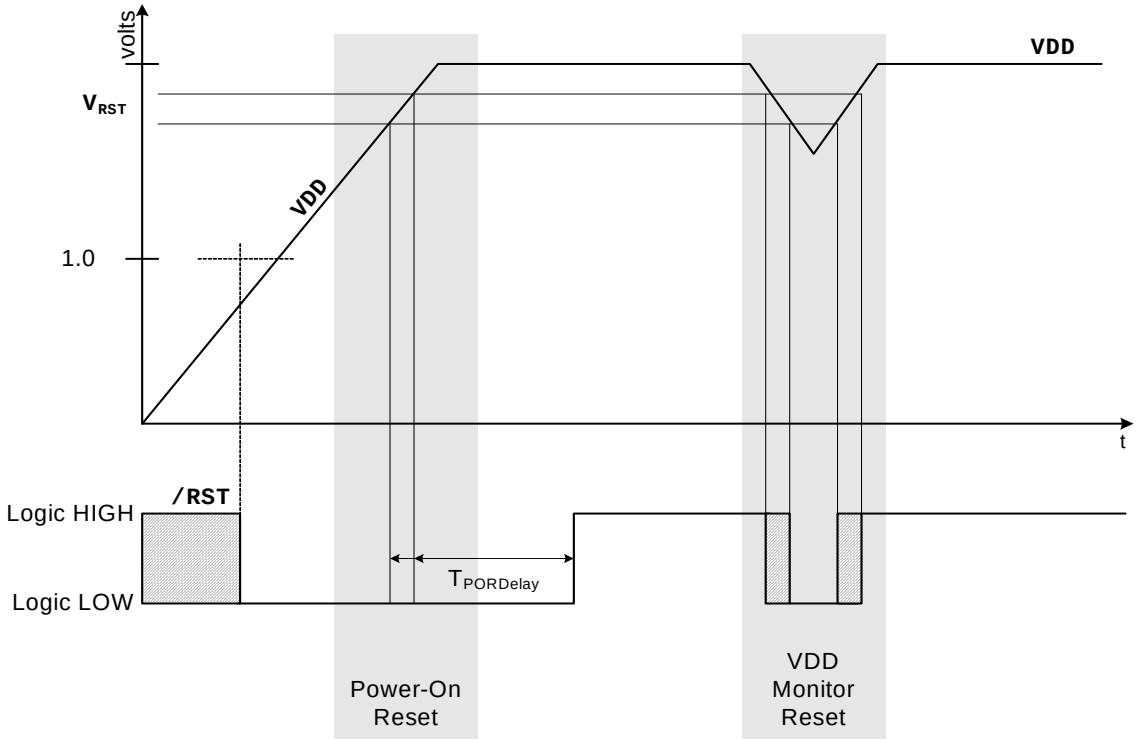

Figure 14. Reset Timing

9.2. Power-fail

When a power-down transition or power irregularity causes V_{DD} to drop below V_{RST}, the power supply monitor will drive the /RST pin low and return the CP2200/1 to the reset state. When V_{DD} returns to a level above V_{RST}, the CP2200/1 will be released from the reset state as shown in Figure 14.

The power supply monitor circuit (V_{DD} Monitor) is enabled and selected as a reset source by hardware following every power-on reset. To prevent the device from being held in reset when V_{DD} drops below V_{RST}, the V_{DD} Monitor may be deselected as a reset source (see RSTEN on page 42) and disabled (see VDMCN on page 39). It is recommended to leave the V_{DD} Monitor enabled and selected as a reset source at all times.

Register 11. VDMCN: V_{DD} Monitor Control Register

R/W	R/W	R	R	R	R	R	R	Reset Value
VDMEN	VDDSTAT	Reserved	Reserved	Reserved	Reserved	Reserved	Reserved	00000000
Bit7	Bit6	Bit5	Bit4	Bit3	Bit2	Bit1	Bit0	Address:
								0x13

Bit 7: VDMEN: V_{DD} Monitor Enable
This bit can be used to disable or enable the V_{DD} Monitor Circuit. **Note: The V_{DD} Monitor circuit is enabled and selected as a reset source following every power-on reset**. If the V_{DD} Monitor is disabled and then reenabled during device operation, it must be allowed to stabilize before it is selected as a reset source. Selecting the V_{DD} Monitor as a reset source before it has stabilized will generate a system reset. **See Table 13 on page 42 for the minimum V_{DD} Monitor turn-on time**.
0: V_{DD} Monitor Disabled.
1: V_{DD} Monitor Enabled.

Bit6: VDDSTAT: V_{DD} Status
This bit indicates the current power supply status (V_{DD} Monitor output).
0: V_{DD} voltage is at or below the V_{DD} Monitor threshold.
1: V_{DD} voltage is above the V_{DD} Monitor threshold.

Bits 5–0: RESERVED. Read = varies; Write = don't care.

9.3. Oscillator-Fail Reset

If the system clock derived from the oscillator fails for any reason after oscillator initialization is complete, the reset circuitry will drive the /RST pin low and return the CP2200/1 to the reset state. The CP2200/1 will remain in the reset state for approximately 1 ms then exit the reset state in the same manner as that for the power-on reset.

9.4. External Pin Reset

The external /RST pin provides a means for external circuitry to force the CP2200/1 into a reset state. Asserting the /RST pin low will cause the CP2200/1 to enter the reset state. It is recommended to provide an external pull-up and/or decoupling capacitor of the /RST pin to avoid erroneous noise-induced resets. The CP2200/1 will exit the reset state approximately 4 µs after a logic high is detected on /RST.

9.5. Software Reset

The software reset provides the host CPU the ability to reset the CP2200/1 through the parallel host interface. Writing a ‘1’ to RESET (SWRST.2) will force the device to enter the reset state with the exception that the external oscillator will not be stopped. As soon as the device enters the reset state, it will immediately exit the reset state and start device calibration; the Oscillator Initialization Complete interrupt is not be generated. After Self Initialization is complete, the device is fully functional.

Note: The software reset is enabled after every reset; however, it may be de-selected as a reset source (see the register description for RSTEN on page 42).

Register 12. SWRST: Software Reset Register

R\W	R\W	R/W	R/W	R/W	W	R/W	R/W	Reset Value
—	—	—	—	—	RESET	—	—	00000000
Bit7	Bit6	Bit5	Bit4	Bit3	Bit2	Bit1	Bit0	Address:
								0x75

Bits 7–3: UNUSED. Read = 00000b, Write = don’t care.
Bit 2: RESET: Software Reset Initiate
Writing a ‘1’ to this bit will generate a software reset.
Bits 1–0: UNUSED. Read = 00b, Write = don’t care.

9.6. Determining the Source of the Last Reset

The RSTSTA register can be used to determine the cause of the last reset. Note: If the PORSI bit is set to logic 1, all other bits in RSTSTA are undefined. It is impossible to differentiate between a power-on, power-fail, and oscillator-fail reset by reading the RSTSTA register.

Register 13. RSTSTA: Reset Source Status Register

R/W	R/W	R/W	R/W	R/W	R	R	R	Reset Value
—	—	—	—	—	SWRSI	PORSI	PINRSI	00000000
Bit7	Bit6	Bit5	Bit4	Bit3	Bit2	Bit1	Bit0	Address:
								0x73

Bits 7–3: UNUSED. Read = 00000b, Write = don't care.
Bit 2: SWRSI: Software Reset Indicator
0: Source of last reset was not a write to RESET (SWRESET.2).
1: Source of last reset was a write to RESET (SWRESET.2).
Bit 1: PORSI: Power-On / Power-Fail / Oscillator-Fail Reset Indicator
0: Source of last reset was not a power-on, power-fail, or oscillator-fail event.
1: Source of last reset was a power-on, power-fail, or oscillator-fail event.
Bit 0: PINRSI: External Pin Reset Indicator
0: Source of last reset was not the /RST pin.
1: Source of last reset was the /RST pin.

9.7. De-Selecting Interrupt Sources

The power-fail (V_{DD} Monitor) reset is automatically enabled after every power-on reset. The software reset is enabled after every device reset, regardless of the reset source. The RSTEN register can be used to prevent either of these two reset sources from generating a device reset.

Register 14. RSTEN: Reset Enable Register

R/W	R/W	R/W	R/W	R/W	R/W	R/W	R/W	Reset Value
—	—	—	—	—	ESWRST	EPFRST	—	00000100
Bit7	Bit6	Bit5	Bit4	Bit3	Bit2	Bit1	Bit0	Address:
								0x72

Bits 7–3: UNUSED. Read = 00000b, Write = don't care.
Bit 2: ESWRST: Enable Software Reset
0: Software reset is not selected as a reset source.
1: Software reset is selected as a reset source.
Bit 1: EPFRST: Enable Power Fail Reset
0: The power fail detection circuitry (V_{DD} Monitor) is not selected as a reset source.
1: The power fail detection circuitry (V_{DD} Monitor) is selected as a reset source.
Bit 0: UNUSED. Read = 0b, Write = don't care.

Table 13. Reset Electrical Characteristics

V_{DD} = 3.1 to 3.6 V, –40 to +85 °C unless otherwise specified.

Parameters	Conditions	Min	Typ	Max	UNITS
$\overline{RST}$ Output Low Voltage	IOL = 8.5 mA	—	—	0.6	V
$\overline{RST}$ Input High Voltage		0.7 x V_{DD}	—	—	V
$\overline{RST}$ Input Low Voltage		—	—	0.3 x V_{DD}	V
$\overline{RST}$ Input Pullup Current		—	25	50	µA
V_{DD} POR Threshold (VRST)		2.2	2.4	2.6	V
Minimum /RST Low Time to Generate a System Reset		15	—	—	µs
V_{DD} Monitor Turn-on Time		100	—	—	µs
V_{DD} Monitor Supply Current		—	20	50	

10. Power Modes

The CP2200/1 has four power modes that can be used to minimize overall system power consumption. The power modes vary in device functionality and recovery methods. Each of the following power modes is explained in the following sections:

- Normal Mode (Device Fully Functional)
- Link Detection Mode (Transmitter Disabled)
- Memory Mode (Transmitter and Receiver Disabled)
- Shutdown Mode (Oscillator Output Disabled)

The power modes above are achieved by disabling specific primary functions of the CP2200/1. Figure 15 shows how power is distributed throughout the CP2200/1. To further reduce power consumption in any of the power modes, secondary device functions may be turned off individually. The secondary device functions that may be turned off are:

- Link/Activity LED Drivers
- Weak pull-ups to V_{DD}
- V_{DD} Monitor

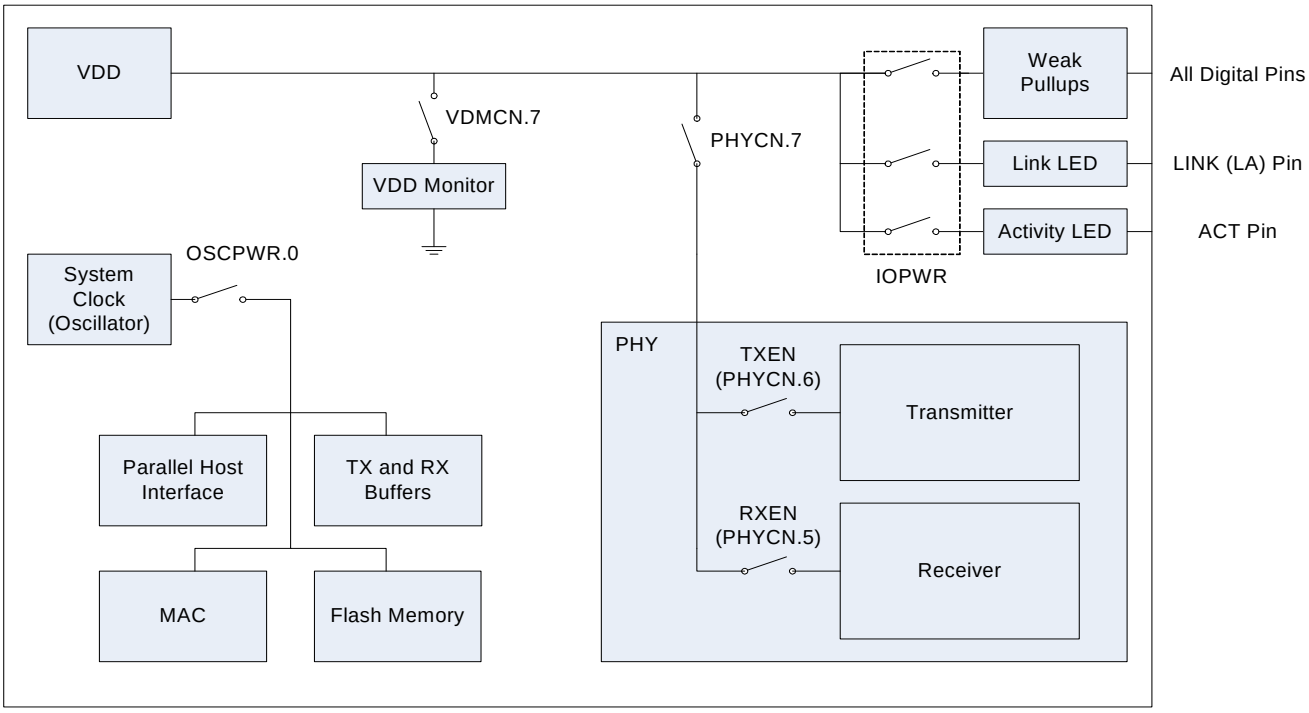

Figure 15. Power and Clock Distribution Control

10.1. Normal Mode

Normal Mode should is used whenever the host is sending or receiving packets. In this mode, the CP2200/01 is fully functional. Typical Normal Mode power consumption is listed in Table 2 on page 9.

Note: When in normal mode, the transmitter has a power saving mode which is enabled on reset. This power saving mode disables the transmitter's output driver and placed the TX+/- pins in high impedance when the CP220x is not transmitting link pulses or data. To meet the minimum transmitter loss requirements in IEEE 802.3, this power saving mode should be disabled. See Register 17, “TXPWR: Transmitter Power Register,” on page 46 for details.

10.2. Link Detection Mode

In Link Detection Mode, the transmitter and link pulse generation logic is disabled. The CP2200/1 will appear to be “offline” because link pulses will not be generated. The most common way to use Link Detection Mode is enabling the Wake-on-LAN interrupt, placing the CP2200/01 into Link Detection Mode, then placing the MCU in a low power mode until the system is plugged into a network.

Note: When using link detection mode, the user should ensure that the link partner is always transmitting link pulses. An example of this type of device would be a hub or a switch. Some notebook PCs implement a power saving feature in which they stop transmitting link pulses if a valid link is not detected. This would create a situation where both link partners are waiting for each other to start transmitting link pulses.

Note: A minimum transmitter return loss is specified in IEEE 802.3. If the transmitter is disabled, the TX± pins are placed in high impedance mode and do not create the minimum return loss. The transmitter should not be disabled if the device is considered "on a network" and valid link pulses are being received.

From Normal Mode, the device can be placed in Link Detection Mode by clearing TXEN (PHYCN.6) to “0”. To return the device to Normal Mode, disable the physical layer by clearing PHYCN to 0x00, then re-enable the physical layer using the startup procedure in Section 15.7 on page 90.

10.3. Memory Mode

In Memory Mode, the physical layer (receiver and transmitter) is placed in a low-power state, and the CP2200/1 can neither send nor receive packets. The only primary functions of the device that remain functional are the Flash memory and RAM buffers. The RAM buffers are only accessible using the Random Access method described in Section 7.1 on page 23.

The device can be placed in Memory Mode by clearing the three most significant bits of the PHYCN register to ‘000’. The device can be returned to normal mode by setting the three most significant bits of the PHYCN register to ‘111’ and waiting the appropriate physical layer turn-on times for both the transmitter and the receiver. The physical layer electrical characteristics including turn-on time are specified in Table 22 on page 93. To return the device to Normal Mode, disable the physical layer by clearing PHYCN to 0x00, then re-enable the physical layer using the startup procedure in Section 15.7 on page 90.

10.4. Shutdown Mode

Shutdown Mode is the lowest power mode for the CP2200/1. All primary and secondary functions are disabled, and the system clock is disconnected from the oscillator. The device can recover from Shutdown Mode only through a power-on or pin reset.

The device can be placed in Shutdown Mode using the following procedure:

Step 1: Disable the PHY by clearing the three most significant bits of PHYCN to ‘000’.

Step 2: Disable the LED drivers by clearing bits 2 and 3 of IOPWR to ‘00’.

Step 3: Disable the V_{DD} Monitor (optional) by clearing VDMEN (VDMCN.7) to ‘0’.

Step 4: Disconnect the oscillator output from the rest of the device by clearing OSCOE (OSCPWR.0) to ‘0’. This step should be performed last because the device will no longer respond until the next pin or power-on reset.

10.5. Disabling Secondary Device Functions

The LED Drivers, weak pull-ups, and V_{DD} Monitor can be disabled to minimize power consumption. The typical supply current for the V_{DD} Monitor is specified in Table 13 on page 42. Disabling weak pull-ups will save current if the MOTEN and MUXEN pins are tied to ground, but will cause the address and data pins to float (causing undefined device behavior and increased power consumption) if they are not externally driven or pulled to a defined logic level using pull-up or pull-down resistors. The internal weak pull-ups should not be disabled unless all digital pins are externally driven to a logic high or logic low state.

Register 15. IOPWR: Port Input/Output Power Register

R/W	R/W	R/W	R/W	R/W	R/W	R/W	R/W	Reset Value
—	—	—	—	ACTEN	LINKEN	WEAKD	Reserved	00000000
Bit7	Bit6	Bit5	Bit4	Bit3	Bit2	Bit1	Bit0	Address: 0x70

Bits 7–4: UNUSED. Read = 0000b, Write = don't care.
Bit 3 ACTEN: Activity LED Enable
0: Activity LED disabled.
1: Activity LED enabled.
Bit 2 LINKEN: Link LED Enable (Link/Activity LED on CP2201)
0: Link (Link/Activity) LED disabled.
1: Link (Link/Activity) LED enabled.
Bit 1: WEAKD: Weak Pull-up Disable
0: Weak pull-ups are enabled.
1: Weak pull-ups are disabled.
Bit 0: Reserved. Read = 0b; Must write 0b.

Register 16. OSCPWR: Oscillator Power Register

R/W	R/W	R/W	R/W	R/W	R/W	R	R/W	Reset Value
—	—	—	Reserved	Reserved	Reserved	Reserved	OSCOE	00000010
Bit7	Bit6	Bit5	Bit4	Bit3	Bit2	Bit1	Bit0	Address: 0x7C

Bits 7–5: UNUSED. Read = 0000b, Write = don't care.
Bit 4–2: RESERVED. Read = 100b; Must write x00b.
Bit 1: UNUSED. Read = 1b; Write = don't care.
Bit 0: OSCOE: Oscillator Output Enable
This bit controls the output of the external oscillator. It does not affect the external crystal driver.
0: Oscillator output disabled. The device will no longer respond until the next reset.
1: Oscillator output enabled.

Register 17. TXPWR: Transmitter Power Register

R/W	R/W	R/W	R/W	R/W	R/W	R/W	R/W	Reset Value
PSAVED	Reserved	Reserved	Reserved	Reserved	Reserved	Reserved	Reserved	00000000
Bit7	Bit6	Bit5	Bit4	Bit3	Bit2	Bit1	Bit0	Address: 0x7A

Bit 7: PSAVED. Transmitter Power Save Mode Disable Bit
0: Enable transmitter power saving mode.
1: Disable transmitter power saving mode.
Bits 6–0: Reserved. Read = varies; Must write 0000000b.

11. Transmit Interface

11.1. Overview

The CP2200/1 provides a simple interface for transmitting Ethernet packets requiring the host to only load the source and destination addresses, length/type, and data into the transmit buffer. All other IEEE 802.3 requirements, such as the preamble, start frame delimiter, CRC, and padding (full-duplex only), are automatically generated. Figure 16 shows a typical Ethernet packet.

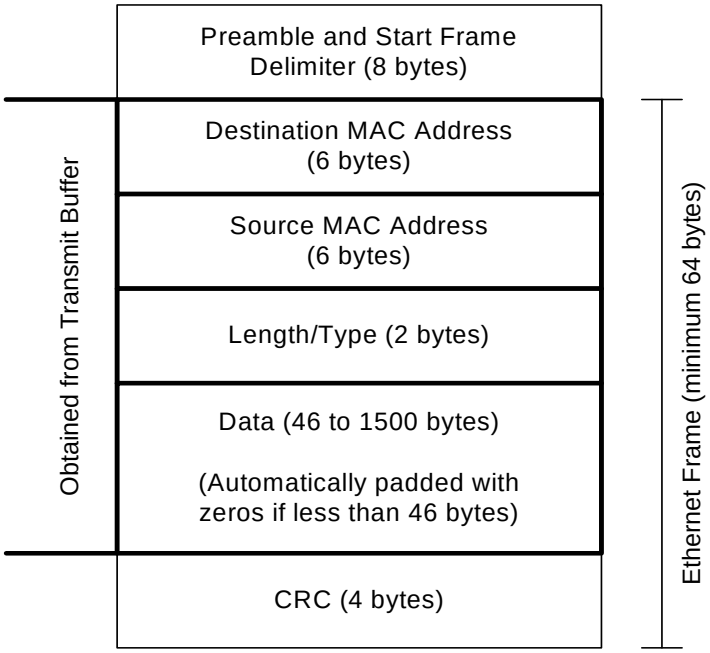

Figure 16. Typical Ethernet Packet

11.2. Transmitting a Packet

Once reset initialization is complete (See), the CP2200/1 is ready to transmit Ethernet packets. The following procedure can be used to transmit a packet:

Step 1: Wait for the previous packet to complete (TXBUSY == 0x00). The worst case time to transmit a packet is 500 ms in half-duplex mode with exponential backoff.

Step 2: Set the TXSTARTH:TXSTARTL transmit buffer pointer to 0x0000.

Step 3: If the last packet was aborted ((TXSTA3 & 0xF8) != 0x00), then this packet must be loaded into the transmit buffer using the Random Memory Access Method:

a. Set RAMADDRH:RAMADDRL to 0x0000.

b. Write the first data byte to RAMTXDATA.

c. Increment RAMADDRH:RAMADDRL.

d. Write another data byte to RAMTXDATA.

e. Repeat steps c and d until the entire packet is loaded.

f. Pad small packets to at least 64 bytes.

g. Set TXENDH:TXENDL to the address of the last byte added. This value must be greater than or equal to 0x0040.

Step 4: If the last packet was successfully transmitted ((TXSTA2 & 0x80) == 0x80), then this packet may be loaded into the transmit buffer using the AutoWrite Interface:

a. Write all data bytes to the TXAUTOWR register, one byte at time.

b. If the MAC is in half-duplex mode, pad small packets to at least 64 bytes.

Step 5: Set the TXSTARTH:TXSTARTL transmit buffer pointer back to 0x0000.

Step 6: Write a '1' to the TXGO bit (TXCN.0) to begin transmission.

Note: Step 4 may be skipped if Step 3 is always performed.

11.3. Overriding Transmit Configuration Options

The global transmit configuration options are set in the MAC registers. The transmit interface allows the host processor to customize packet transmission on a per-packet basis by overriding the global MAC settings. The following options can be overridden by the transmit interface:

- Short Frame Padding—When enabled, ensures that no frame smaller than 64 bytes is transmitted. The frame size does not include the 8 byte preamble; however, the 4-byte CRC field is included.
- CRC Generation—When enabled, a 32-bit CRC will be calculated and appended to the Ethernet frame.
- Pause packet transmission (Full Duplex Mode)—When enabled, an Ethernet PAUSE packet with a pause value of TXPAUSEH:TXPAUSEL is transmitted. The pause value is in units of 512 bit times (51.2 µs).
- Application of Back Pressure (Half Duplex Mode).
- Switching between Half/Full Duplex Modes. Note: This setting does not affect the physical layer.

11.4. Transmit Buffer and AutoWrite Interface

The transmit buffer provides the AutoWrite interface to efficiently load the buffer with an entire packet. The interface consists of three registers: TXSTART, TXEND, and TXAUTOWR. The TXSTART register points to the address of the next available byte and can be reset to the first byte of the buffer. TXEND points to the last byte added to the buffer. TXAUTOWR is the data register. Each write to TXAUTOWR sets TXEND to the address of the byte written and increments TXSTART. After the packet is loaded into the buffer, TXSTART is reset to 0x0000 to mark the starting point of the packet. TXEND will continue to point to the last byte in the packet.

Note: The AutoWrite Interface cannot be used following an aborted packet. This only applies if the device is in half-duplex mode.

11.5. Transmit Status and Control Registers

The CP2200 transmit interface is controlled and managed through the registers in Table 14. After each packet is transmitted, information about the last transmitted packet can be obtained from the 52-bit transmit status vector accessible through the TXSTA0 — TXSTA6 registers. The transmit status vector is described in Table 15.

Table 14. Transmit Status and Control Register Summary

Register	Long Name	Address	Description
TXCN	Transmit Control	0x53	Contains the transmit configuration option override bits and the TXGO bit used to start packet transmission.
TXBUSY	Transmit Busy Indicator	0x54	Read-only register returning 0x01 when transmit interface is currently transmitting a packet and 0x00 when transmit interface is not transmitting.
TXPAUSEH TXPAUSEL	Transmit Pause High and Low Bytes	0x55 0x56	16-bit pause value used for PAUSE packet transmission. The pause value is in units of 512 bit times (51.2µs).
TXSTARTH TXSTARTL	Transmit Data Starting Address High and Low Bytes	0x59 0x5A	Starting address of outgoing packet in the transmit buffer. Packets added to the transmit buffer must start at 0x0000.
TXENDH TXENDL	Transmit Data Ending Address High and Low Bytes	0x57 0x58	Address of last byte added to the transmit buffer. This register is managed by hardware.
TXAUTOWR	Transmit Data AutoWrite	0x03	Writes to this register add a byte to the transmit buffer, set TXEND to the address of the written byte, and increment TXSTART.
TXSTA6 TXSTA5 TXSTA4 TXSTA3 TXSTA2 TXSTA1 TXSTA0	Transmit Status Vector	0x5C 0x5D 0x5E 0x5F 0x60 0x61 0x62	52-bit transmit status vector containing information about the last transmitted packet including collision count, successful transmission, total bytes transmitted, etc.

Table 15. Transmit Status Vector Description

Bit	Field Name	Description
51	Transmitted VLAN Frame	Last frame transmitted had length/type field of 0x8100 (VLAN protocol Identifier).
50	Back Pressure Applied	Back pressure was applied during transmission.
49	Transmitted PAUSE Frame	Last frame transmitted was a valid PAUSE control frame.
48	Transmitted Control Frame	Last frame transmitted was a control frame.
47-32	Total Bytes Transmitted	Number of bytes transmitted on wire including all bytes from collided attempts.
31	Transmit Under-Run	Last packet was aborted due to a data under-run condition.
30	Jumbo Packet Detected	Last packet was aborted due to the detection of a Jumbo packet (oversized frame). Jumbo packets are not supported.
29	Late Collision Detected	Last packet was aborted due to a collision occurring after the 51.2 µs collision window.
28	Excessive Collisions Detected	Last packet was aborted due to detection of 16 or more collisions.
27	Excessive Delay Detected	Aborted due to a delay longer than 2.42ms.
26	Delay Detected	Last packet was transmitted, but had delay (less than 2.42 ms).
25	Transmitted Broadcast Packet	Last packet transmitted had a broadcast destination address.
24	Transmitted Multicast Packet	Last packet transmitted had a multicast destination address.
23	Transmit Successful	Last packet was successfully transmitted.
22	Type Field Detected	Last packet's length/type field had a value greater than 1500.
21	Length Check Error	Last packet's length/type field had a value less than or equal to 1500 which did not match the actual frame length.
20	CRC Error	Last packet's CRC field did not match the internally generated CRC.
19-16	Transmit Collision Count	Number of collisions encountered during transmission of the last packet.
15-0	Transmit Byte Count	Number of bytes in last frame not counting collided bytes.

Register 18. TXCN: Transmit Control Register

R/W	R/W	R/W	R/W	R/W	R/W	R/W	W	Reset Value
OVRRIDE	—	CRCENOV	PADENOV	TXPPKT	BCKPRES	FDPLXOV	TXGO	00000000
Bit7	Bit6	Bit5	Bit4	Bit3	Bit2	Bit1	Bit0	Address: 0x53

Bit 7: OVRRIDE: Default Override
0: Settings for bits 5, 4, 3, 2, and 1 in TXCN will be ignored. MAC settings will take effect.
1: Settings for bits 5, 4, 3, 2, and 1 in TXCN will be applied. MAC settings will be overridden.

Bit 6: UNUSED. Read = 0b, Write = don't care.

Bit 5: CRCENOV: CRC Enable
0: Disable CRC append on transmission.
1: Enable CRC append on transmission.

Bit 4: PADENOV: Pad Enable
0: Disable padding of short frames.
1: Enable padding of short frames.

Bit 3: TXPPKT: Transmit a PAUSE control packet
0: Normal packet transmission. Packet data will be obtained from the transmit buffer.
1: A PAUSE control packet with the value of TXPAUSEH:TXPAUSEL will be transmitted. Data in the transmit buffer will not be accessed. PAUSE control packets are only valid in full-duplex mode.

Bit 2: BCKPRES: Apply Back Pressure
0: Normal packet transmission. Back pressure will not be applied.
1: Back pressure will be applied on transmission (only valid in half duplex mode).

Bit 1: FDPLXOV: Full Duplex Operation
Note: The transmit interface, MAC, and physical layer must be configured to the same duplex mode.
0: Transmit interface operates in half duplex mode.
1: Transmit interface operates in full duplex mode.

Bit 0: TXGO: Transmit Packet
Set this bit to '1' to begin transmission of a packet.
Note: TXGO should not be set to one if both TXSTART and TXEND are zero (i.e., no data has been added to the buffer).

Register 19. TXBUSY: Transmit Busy Indicator

R	R	R	R	R	R	R	R	Reset Value
—	—	—	—	—	—	—	TXBUSY	00000000
Bit7	Bit6	Bit5	Bit4	Bit3	Bit2	Bit1	Bit0	Address: 0x54

Bits 7–1: UNUSED. Read = 0000000b, Write = don't care.

Bit 0: TXBUSY: Packet Transmit Status
0: Packet Transmit is not in progress.
1: Packet Transmit is in progress.

Register 20. TXPAUSEH: Transmit Pause High Byte

R/W	R/W	R/W	R/W	R/W	R/W	R/W	R/W	Reset Value
								00000000
Bit7	Bit6	Bit5	Bit4	Bit3	Bit2	Bit1	Bit0	Address:
								0x55

Bits 7–0: TXPAUSEH: Transmit Pause High Byte
High byte of the 16-bit pause value sent in a PAUSE control packet. The pause value is in units of 512 bit times (512 bit times = 51.2 µs).

Register 21. TXPAUSEL: Transmit Pause Low Byte

R/W	R/W	R/W	R/W	R/W	R/W	R/W	R/W	Reset Value
								00000000
Bit7	Bit6	Bit5	Bit4	Bit3	Bit2	Bit1	Bit0	Address:
								0x56

Bits 7–0: TXPAUSEL: Transmit Pause Low Byte
Low byte of the 16-bit pause value sent in a PAUSE control packet. The pause value is in units of 512 bit times (512 bit times = 51.2 µs).

Register 22. TXSTARTH: Transmit Data Starting Address High Byte

R/W	R/W	R/W	R/W	R/W	R/W	R/W	R/W	Reset Value
								00000000
Bit7	Bit6	Bit5	Bit4	Bit3	Bit2	Bit1	Bit0	Address:
								0x59

Bits 7–0: TXSTARTH: Transmit Data Starting Address High Byte
High byte of the starting address of outgoing packet in the transmit buffer. Note: Outgoing packets must start at 0x0000.

Register 23. TXSTARTL: Transmit Data Starting Address Low Byte

R/W	R/W	R/W	R/W	R/W	R/W	R/W	R/W	Reset Value
								00000000
Bit7	Bit6	Bit5	Bit4	Bit3	Bit2	Bit1	Bit0	Address:
								0x5A

Bits 7–0: TXSTARTL: Transmit Data Starting Address Low Byte
Low byte of the starting address of outgoing packet in the transmit buffer. Note: Outgoing packets must start at 0x0000.

Register 24. TXENDH: Transmit Data Ending Address High Byte

R/W	R/W	R/W	R/W	R/W	R/W	R/W	R/W	Reset Value
								00000000
Bit7	Bit6	Bit5	Bit4	Bit3	Bit2	Bit1	Bit0	Address:
								0x57

Bits 7–0: TXENDH: Transmit Data Ending Address High Byte
High byte of the address of the last byte added to the transmit buffer.

Register 25. TXENDL: Transmit Data Ending Address Low Byte

R/W	R/W	R/W	R/W	R/W	R/W	R/W	R/W	Reset Value
								00000000
Bit7	Bit6	Bit5	Bit4	Bit3	Bit2	Bit1	Bit0	Address:
								0x58

Bits 7–0: TXENDL: Transmit Data Ending Address Low Byte
Low byte of the address of the last byte added to the transmit buffer.

Register 26. TXAUTOWR: Transmit Data AutoWrite

R/W	R/W	R/W	R/W	R/W	R/W	R/W	R/W	Reset Value
								00000000
Bit7	Bit6	Bit5	Bit4	Bit3	Bit2	Bit1	Bit0	Address:
								0x03

Bits 7–0: TXSTARTL: Transmit Data Starting Address Low Byte
Writes to this register add a single byte to the transmit buffer and set the TXEND pointer to the address of the byte currently being written.

Register 27. TXSTA6: Transmit Status Vector 6

R/W	R/W	R/W	R/W	R	R	R	R	Reset Value
—	—	—	—	TXVLAN	BCKPRES	TXPF	TXCF	00000000
Bit7	Bit6	Bit5	Bit4	Bit3	Bit2	Bit1	Bit0	Address:
								0x5C

Note: This register contains bits 51–48 of the Transmit Status Vector.

Bits 7–4: UNUSED. Read = 0000b, Write = don't care.
Bit 3. TXVLAN: Transmitted VLAN Frame
0: Transmitted frame had length/type field of 0x8100.
1: Transmitted frame did not have a length/type field of 0x8100.
Bit 2: BCKPRES: Back Pressure Applied
0: Back pressure was not applied during transmission.
1: Back pressure was applied during transmission.
Bit 1: TXPF: Transmitted PAUSE Frame
0: Transmitted frame was not a PAUSE control frame.
1: Transmitted frame was a valid PAUSE control frame.
Bit 0: TXCF: Transmitted Control Frame
0: Transmitted frame was not a control frame.
1: Transmitted frame was a control frame.

Register 28. TXSTA5: Transmit Status Vector 5

R	R	R	R	R	R	R	R	Reset Value
								00000000
Bit7	Bit6	Bit5	Bit4	Bit3	Bit2	Bit1	Bit0	Address:
								0x5D

Note: This register contains bits 47–40 of the Transmit Status Vector.

Bits 7–0: TXSTA5: Total Bytes Transmitted High Byte
The most significant 8-bits of the total number of bytes transmitted on the wire, including all bytes from collided attempts.

Register 29. TXSTA4: Transmit Status Vector 4

R	R	R	R	R	R	R	R	Reset Value
								00000000
Bit7	Bit6	Bit5	Bit4	Bit3	Bit2	Bit1	Bit0	Address:
								0x5E

Note: This register contains bits 40-32 of the Transmit Status Vector.

Bits 7-0: TXSTA4: Total Bytes Transmitted Low Byte
The least significant 8-bits of the total number of bytes transmitted on the wire, including all bytes from collided attempts.

Register 30. TXSTA3: Transmit Status Vector 3

R	R	R	R	R	R	R	R	Reset Value
TXURUN	TXJUMBO	TXLTCL	TXEXCL	TXEXDE	TXDE	TXBCAST	TXMCAST	00000000
Bit7	Bit6	Bit5	Bit4	Bit3	Bit2	Bit1	Bit0	Address:
								0x5F

Note: This register contains bits 31–24 of the Transmit Status Vector.

Bit 7: TXURUN: Transmit Under-Run
0: Transmit under-run did not occur.
1: Packet aborted due to data under-run condition.

Bit 6: TXJUMBO: Jumbo Packet Detected
0: Transmitted packet was not oversized.
1: Packet aborted due to its excessive size.

Bit 5: TXLTCL: Late Collision Detected
0: Late collision was not detected.
1: Packet aborted due to the detection of a collision after the 51.2 us collision window.

Bit 4: TXEXCL: Excessive Collisions Detected
0: Number of collisions on transmission was less than 16.
1: Packet aborted due to detection of 16 or more collisions.

Bit 3: TXEXDE: Excessive Delay Detected
0: Packet was transmitted without an excessive delay (greater than 2.42 ms). Please check other flags for information.
1: Packet was aborted due to an excessive delay (greater than 2.42 ms).

Bit 2: TXDE: Delay Detected
0: Packet was transmitted with no delay or was aborted. Please check other flags for information.
1: Packet was transmitted, but had some delay (less than 2.4 ms).

Bit 1: TXBCAST: Transmitted Broadcast Packet
0: Transmitted packet did not have a broadcast destination address.
1: Transmitted packet had a broadcast destination address.

Bit 0: TXMCAST: Transmitted Multicast Packet
0: Transmitted packet did not have a multicast destination address.
1: Transmit packet had a multicast destination address.

Register 31. TXSTA2: Transmit Status Vector 2

R	R	R	R	R	R	R	R	Reset Value
TXOK	TXTYPE	TXLCERR	TXCRCER	TXCOL3	TXCOL2	TXCOL1	TXCOL0	00000000
Bit7	Bit6	Bit5	Bit4	Bit3	Bit2	Bit1	Bit0	Address:
								0x60

Note: This register contains bits 23–16 of the Transmit Status Vector.

Bit 7: TXOK: Transmit Successful
0: Transmission was aborted.
1: Transmission was successful.

Bit 6: TXLOOR: Type Field Detected
0: Last packet's type/length field was used as a length.
1: Last packet's type/length field was used as a type.

Bit 5: TXLCERR: Length Check Error
0: Last packet's length field matched the actual frame length.
1: Last packet's length field did not match the actual frame length.

Bit 4: TXCRCER: CRC Error
0: Last packet's CRC matched the internally generated CRC.
1: Last packet's CRC did not match the internally generated CRC.

Bits 3–0: TXCOL3-0: Transmit Collision Count
Number of collisions encountered during transmission of the last packet.
Note: This bit field does not overflow and will remain at 1111b (15 collisions) if 15 or more collisions are encountered.

Register 32. TXSTA1: Transmit Status Vector 1

R	R	R	R	R	R	R	R	Reset Value
								00000000
Bit7	Bit6	Bit5	Bit4	Bit3	Bit2	Bit1	Bit0	Address:
								0x61

Note: This register contains bits 15–8 of the Transmit Status Vector.

Bits 7–0: TXSTA1: Transmit Byte Count High Byte
The most significant 8-bits of the number of bytes in the last transmitted frame. Does not include bytes transmitted due to collided attempts.

Register 33. TXSTA0: Transmit Status Vector 0

R	R	R	R	R	R	R	R	Reset Value
								00000000
Bit7	Bit6	Bit5	Bit4	Bit3	Bit2	Bit1	Bit0	Address:
								0x62

Note: This register contains bits 15–8 of the Transmit Status Vector.

Bits 7–0: TXSTA0: Transmit Byte Count Low Byte
The least significant 8-bits of the number of bytes in the last transmitted frame. Does not include bytes transmitted due to collided attempts.

12. Receive Interface

12.1. Overview

The CP2200/1 has a 4k circular receive FIFO buffer and an 8 entry translation look-aside buffer (TLB) capable of storing up to 8 packets at a time. Each TLB entry holds the starting address, length, and other information about a single received packet. Once a packet is received, the host microcontroller is notified using the interrupt request pin. The host microcontroller may then copy the contents of the packet to its local memory through the host interface or skip the packet by writing '1' to RXSKIP (RXCN.1). Skipped packets remain in memory but will be overwritten as new packets arrive.

The receive interface has an advanced receive filter and hash table to prevent unwanted packets from reaching the receive buffer. For all packet types not supported by the receive filter, the CP2200/1 allows the host microcontroller complete random access to the receive buffer. The host microcontroller can check specific bytes in the packet to determine whether or not to copy the packet.

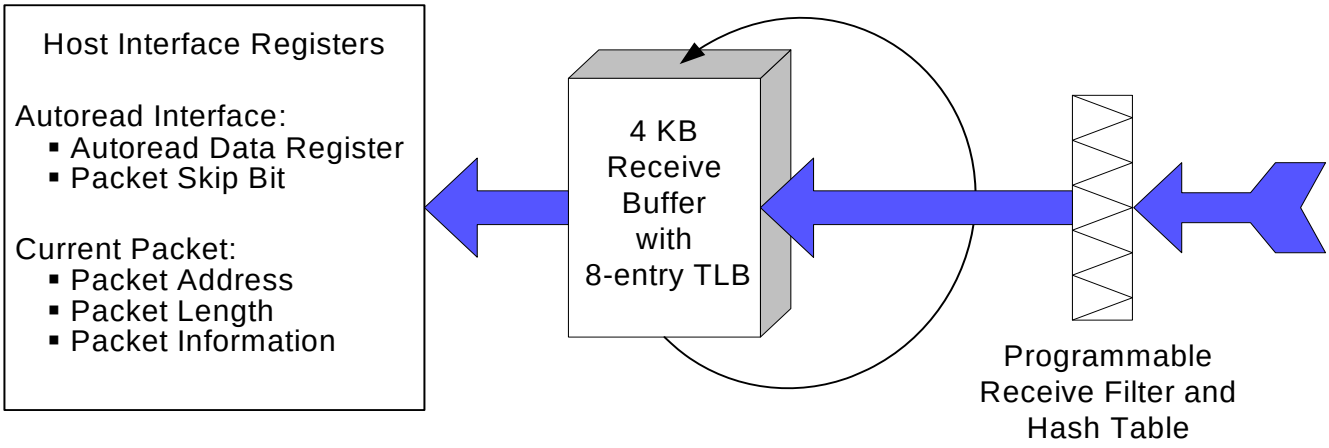

Figure 17. Receive Interface Block Diagram

12.2. Reading a Packet Using the Autoread Interface

Once reset initialization is complete (Section 6.2 on page 18) and the receive buffer, filter, and hash table (Section 12.4) are initialized, the CP2200/1 is ready to receive Ethernet packets. After receiving notification of a new packet, the following procedure can be used to read the packet:

Step 1: Read RXVALID (CPINFOH.7) and RXOK (CPINFOL.7) to check if the current packet was received correctly. The host processor may optionally use the packet starting address CPADDR to read specific bytes in the packet and determine whether to copy or skip the current packet. The random access method described in Section 7.1 on page 23 can be used to access the buffer.

Step 2: If RXVALID or RXOK is 0, or to skip the packet, write a '1' to RXSKIP (RXCN.1).
If RXVALID and RXOK are 1, read the length of the current packet from CPLENH:CPLENL.

Step 3: Read the entire packet, one byte at a time, by reading RXAUTORD.

Step 4: If the entire packet was read, write a '1' to RXCLRV (RXCN.2).
If there are any unread bytes remaining in the current buffer, write a '1' to RXSKIP (RXCN.1).

12.3. Timing and Buffer Overflow Considerations

For 10 Base-T Ethernet, a minimum-sized packet of 64 bytes is received in 51.2 us. The maximum number of packets that can be held by the receive buffer is eight. To ensure that pointer corruption does not occur, software should disable packet reception (RXINH = 1) after the seventh packet has arrived in the receive buffer. If the ability to service the packet received interrupt is longer than 51.2us, then software should use the random access method to retrieve data from the receive buffer. The random access method described in Section 7.1 on page 23.

Note: The value of CPADDRH:CPADDRL may be invalid if an overflow event occurs. After an overflow, the FIFOHEADH:FIFOHEADL pointer should be used to determine the starting address of the current packet. CPLEN will always remain valid even after an overflow event.

Note: If the Receive FIFO Full Interrupt is triggered, the interrupt flag must be cleared to re-enable packet reception. The Receive FIFO Full Interrupt is triggered based on the size of packets or on the number of packets. If triggered based on the number of packets, then pointer corruption has occurred.

12.4. Initializing the Receive Buffer, Filter and Hash Table

After a device reset, the receive buffer is empty and the filter is configured to accept broadcast packets and multicast packets matching a hash value of 0x0400. This hash value allows PAUSE control packets to pass through the receive filter.

The receive buffer does not require any additional initialization. The receive filter can be configured to accept or ignore broadcast packets, multicast packets, runt packets (Ethernet Frame smaller than 64 bytes), and packets with a CRC error. The receive filter is configured using the RXFILT register.

The device can be configured to accept broadcast packets and packets addressed to the controller's MAC address without using the hash table. If multicast packets need to be accepted, then the hash table can be programmed to accept packets addressed to specific address ranges.

The CP2200/1 implements a 16-bit hash table to represent all possible addresses in the 64-bit address space. Each of the possible 65536 possible values for the hash table represent a range of MAC addresses. If all 16 bits are set to '1', all multicast addresses will be accepted. If all 16-bits are set to '0', then all multicast addresses will be rejected.The following procedure can be used to determine which bits to set for a specific address:

Step 1: Perform a 32-bit CRC on the 6-bytes of the address using 0xC704DD7B as the polynomial.

Step 2: Record the least significant 4 bits of the CRC result (Hash Index).

Step 3: The Hash Index determines the bit that should be set in the hash table that will allow the address to be received. For example, if the least significant 4-bits of the CRC result are 101b (5d), then setting bit 5 of the 16-bit hash table will allow all MAC addresses whose CRC result is 5d to be accepted.

12.5. Receive Status and Control Registers

The CP2200/1 receive interface is controlled and managed through the registers in Table 16. The current packet registers provide information about the next packet to be unloaded from the receive buffer (the oldest packet received).

Table 16. Receive Status and Control Register Summary

Register	Long Name	Address	Description
RXCN	Receive Interface Control	0x11	Contains receive interface control bits such as RXSKIP, RXCLRV, RXRST, and RXINH.
RXSTA	Receive Interface Status	0x12	Indicates when the receive interface is busy receiving a frame and when the current packet has been completely read from the buffer.
RXAUTORD	Receive AutoRead	0x01	Provides an efficient method of reading entire packets sequentially from the receive buffer.
RXFILT	Receive Filter Configuration	0x10	Specifies the type of packets can pass through the receive filter.
RXHASHH RXHASHL	Multicast Hash Table	0x0E 0x0F	16-bit Hash Table used to filter multicast packets.
CPINFOH CPINFOL	Current Packet Information	0x1D 0x1E	Specifies information about the current packet such as broadcast/multicast, CRC errors, etc.
CPLENH CPLENL	Current Packet Length	0x1F 0x20	Specifies the length of the current packet in the receive buffer (in bytes).
CPADDRH CPADDRL	Current Packet Address	0x21 0x22	Specifies the starting address of the current packet in the receive buffer.

Register 34. RXCN: Receive Interface Control

R/W	R/W	R/W	R/W	R/W	W	W	W	Reset Value
—	—	—	—	RXINH	RXCLRV	RXSKIP	RXCLEAR	00000000
Bit7	Bit6	Bit5	Bit4	Bit3	Bit2	Bit1	Bit0	Address:
								0x11

Bits 7–4: UNUSED. Read = 0000b, Write = don't care.

Bit 3: RXINH: Receive Inhibit
Setting this bit to '1' temporarily inhibits new packet reception. If a packet is currently being received, reception will continue until the packet is received. Once set, this bit must be cleared to '0' by software to resume packet reception.

Bit 2: RXCLRV: Valid Bit Clear
Writing a '1' to this bit clears the valid bit of the current packet, freeing up the buffer for new packets. This action should only be started after all bytes of the current packet have been read (CPEND = 1). If the packet is not completely read, RXSKIP should be used to discard the remaining bytes.

Bit 1: RXSKIP: Skip Current Packet
Writing a '1' to this bit updates discards the current packet by clearing its valid bit and advances the AutoRead buffer pointer to the beginning of the next packet.

Bit 0: RXCLEAR: Receive Buffer Clear
Writing a '1' to this bit discards all packets in the receive buffer and resets all buffer pointers and valid bits to zero. Note: Any packets currently in the buffer will remain in memory, however, all information such as the starting address and length of each packet will be lost. Any new packets that arrive will overwrite the existing data.

Register 35. RXSTA: Receive Interface Status

R/W	R/W	R/W	R/W	R/W	R/W	R	R	Reset Value
—	—	—	—	—	—	CPEND	RXBUSY	00000000
Bit7	Bit6	Bit5	Bit4	Bit3	Bit2	Bit1	Bit0	Address:
								0x12

Bits 7–2: UNUSED. Read = 000000b, Write = don't care.

Bit 1: CPEND: Current Packet End Reached
This bit is automatically cleared by hardware when the valid bit for the current packet is cleared (see RXCLRV description) or the current packet is discarded (see RXSKIP description).
0: The last byte of the current packet has not been read using the AutoRead interface.
1: The last byte of the current packet has been read using the AutoRead interface.

Bit 0: RXBUSY: Receiving Packet
0: Receive interface is idle.
1: Receive interface is currently receiving a packet.

Register 36. RXAUTORD: Receive AutoRead Data Register

R/W	R/W	R/W	R/W	R/W	R/W	R/W	R/W	Reset Value
								00000000
Bit7	Bit6	Bit5	Bit4	Bit3	Bit2	Bit1	Bit0	Address:
								0x01

Bits 7–0: RXAUTORD: Receive AutoRead Data Register
Reads from this register read a single byte from the receive buffer and adjust the receive buffer pointer RXFIFOHEAD accordingly.

Register 37. RXFILT: Receive Filter Configuration

R/W	R/W	R/W	R/W	R/W	R/W	R/W	R/W	Reset Value
—	—	—	—	IGNRUNT	IGNERR	IGNBCST	IGNMCST	00001100
Bit7	Bit6	Bit5	Bit4	Bit3	Bit2	Bit1	Bit0	Address:
								0x10

Bits 7–4: UNUSED. Read = 0000b, Write = don't care.
Bit 3: IGNRUNT: Ignore Runt Packets
0: Runt packets are not ignored.
1: Runt packets are ignored.
Bit 2: IGNERR: Ignore FCS Error Packets
0: Packets with FCS error are not ignored.
1: Packets with FCS error are ignored.
Bit 1: IGNBCST: Ignore Broadcast Packets
0: Broadcast packets are not ignored.
1: Broadcast packets are ignored.
Bit 0: IGNMCST: Ignore Multicast Packets
0: Multicast packets are not ignored.
1: Multicast packets are ignored.

Register 38. RXHASHH: Multicast Hash Table High Byte

R/W	R/W	R/W	R/W	R/W	R/W	R/W	R/W	Reset Value
								00000100
Bit7	Bit6	Bit5	Bit4	Bit3	Bit2	Bit1	Bit0	Address:
								0x0E

Bits 7–0: RXHASHH: Multicast Hash Table High Byte
High Byte of 16-bit multicast hash table.

Register 39. RXHASHL: Multicast Hash Table Low Byte

R/W	R/W	R/W	R/W	R/W	R/W	R/W	R/W	Reset Value
								00000000
Bit7	Bit6	Bit5	Bit4	Bit3	Bit2	Bit1	Bit0	Address:
								0x0F

Bits 7–0: RXHASHL: Multicast Hash Table Low Byte
Low Byte of 16-bit multicast hash table.

Register 40. CPINFOH: Current Packet Information High Byte

R	R	R	R	R	R	R	R	Reset Value
RXVALID	RXVLAN	RXUCF	RXPCF	RXCF	RXADATA	BCAST	MCAST	00000000
Bit7	Bit6	Bit5	Bit4	Bit3	Bit2	Bit1	Bit0	Address:
								0x1D

Bit 7: RXVALID: Current packet valid
0: The current packet TLB slot is empty.
1: There is a packet in the current packet TLB slot.
Bit 6: RXVLAN: VLAN Type Detected
0: VLAN tagged frame not detected.
1: VLAN tagged frame detected.
Bit 5: RXUNSUP: Unsupported Control Frame
0: Unsupported control frame not detected.
1: Unsupported control frame detected.
Bit 4: RXPCF: Pause Control Frame
0: Pause control frame not detected.
1: Pause control frame detected.
Bit 3: RXCF: Control Frame
0: Control frame not detected.
1: Control frame detected.
Bit 2: RXADATA: Additional Data Received
0: Normal Operation.
1: 1 to 7 additional bits of data received following receipt of the packet.
Bit 1: BCAST: Broadcast Packet
0: Current packet is not a broadcast packet.
1: Current packet is a broadcast packet.
Bit 0: MCAST: Multicast Packet
0: Current packet is not a multicast packet.
1: Current packet is a multicast packet.

Register 41. CPINFOL: Current Packet Information Low Byte

R	R	R	R	R	R	R	R	Reset Value
RXOK	LENGTH	LENERR	CRCERR	Reserved	Reserved	RXLEN	RXDROP	00000000
Bit7	Bit6	Bit5	Bit4	Bit3	Bit2	Bit1	Bit0	Address:
								0x1E

Bit 7: RXOK: Receive OK
0: Receive not OK.
1: Receive OK.
Bit 6: LENGTH: Length/Type Field Detection
0: The length/type field of the current packet contains the packet length.
1: The length/type field of the current packet contains the packet type.
Bit 5: LENERR: Length Check Error
0: No errors detected in length field.
1: The length field does not match actual packet length.
Bit 4: CRCERR: CRC Error
0: CRC check passed.
1: CRC check failed.
Bits 3–2: Reserved: Read = varies.
Bit 1: RXLEN: Receive Length
0: Normal Operation.
1: The data received is not long enough to form a valid packet.
Bit 0: RXDROP: Packet Dropped
0: Normal operation.
1: A packet has been dropped.

Register 42. CPLENH: Current Packet Length High Byte

R	R	R	R	R	R	R	R	Reset Value
—	—	—	—	—	—	—	—	00000000
Bit7	Bit6	Bit5	Bit4	Bit3	Bit2	Bit1	Bit0	Address:
								0x1F

Bits 7–0: CPLENH: Current Packet Length High Byte
High byte of the current packet length.

Register 43. CPLENL: Current Packet Length Low Byte

R	R	R	R	R	R	R	R	Reset Value
								00000000
Bit7	Bit6	Bit5	Bit4	Bit3	Bit2	Bit1	Bit0	Address:
								0x20

Bits 7–0: CPLENL: Current Packet Length Low Byte
Low byte of the current packet length.

Register 44. CPADDRH: Current Packet Address High Byte

R	R	R	R	R	R	R	R	Reset Value
								00000000
Bit7	Bit6	Bit5	Bit4	Bit3	Bit2	Bit1	Bit0	Address:
								0x21

Note: The contents of this register are invalid following a buffer overflow event.

Bits 7–0: CPADDRH: Current Packet Address High Byte
High byte of the current packet starting address in the receive FIFO buffer.

Register 45. CPADDRL: Current Packet Address Low Byte

R	R	R	R	R	R	R	R	Reset Value
								00000000
Bit7	Bit6	Bit5	Bit4	Bit3	Bit2	Bit1	Bit0	Address:
								0x22

Note: The contents of this register are invalid following a buffer overflow event.

Bits 7–0: CPADDRL: Current Packet Address Low Byte
Low byte of the current packet starting address in the receive FIFO buffer.

12.6. Advanced Receive Buffer Operation

Receive buffer operation is automatically handled by hardware and does not require any assistance from the host processor. **Note: The information in this section is provided for reference purposes only and will typically not be used except when debugging a problem and additional control over the receive buffer is required.**

Figure 18 shows a detailed block diagram of the receive buffer. As packets arrive and pass through the receive filter, they are added to the circular receive buffer at the address pointed to by the tail pointer. The FIFO tail pointer is incremented after each byte is received. As soon as a new packet arrives, the receive buffer controller searches for an unused TLB slot to store data about the received packet. If an unused TLB slot is found, it is claimed and assigned to the packet currently being received by setting the slot's valid bit to '1'. A Packet Received interrupt will be generated after the entire packet is copied to the buffer. If all 8 slots are full (valid bits for all slots are set to '1'), then the packet will be dropped and a Receive FIFO Full interrupt will be generated.

Each TLB slot holds information about its assigned packet such as starting address in the buffer, length, and information about the packet such as the type (broadcast, multicast, unicast) and any errors that occurred during reception (CRC error, incomplete packet, etc.). The receive buffer controller rotates through the TLB slots in a circular fashion. For debugging purposes, the host processor may access any TLB slot using the TLB registers listed in Table 17.

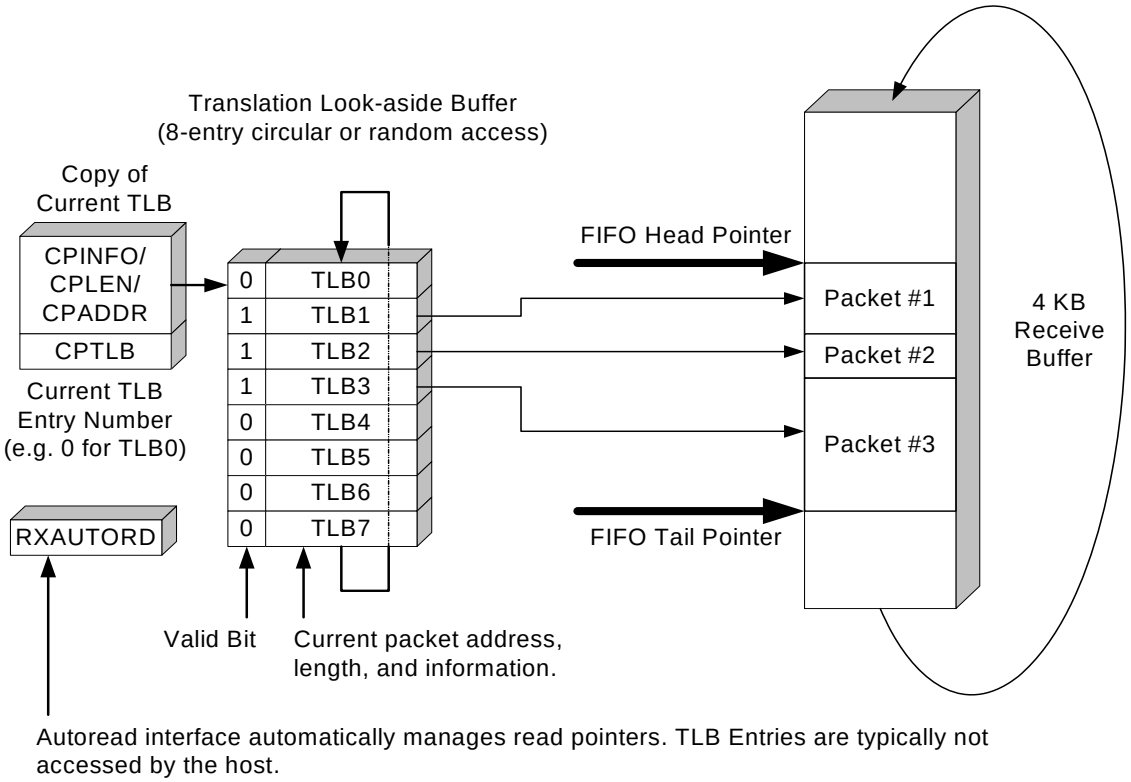

Figure 18. Receive Buffer Block Diagram

The oldest packet received starts at the address pointed to by the FIFO head pointer. This packet (packet #1 in Figure 18) will be referred to as the current packet. The FIFO head pointer is used by the AutoRead interface to read data from the current packet. As data is read using the AutoRead interface, the FIFO head pointer is incremented until the entire packet is read out. Once the packet is read out, the host processor must clear the valid bit of the packet by writing a '1' to RXCLRV (RXCN.2). If the host processor chooses not to read the entire packet, the valid bit should be cleared (and unread data skipped) by writing a '1' to RXSKIP (RXCN.1).

A copy of the TLB slot associated with the current packet is always available by reading the CTLB registers listed in Table 16. The same information can be obtained by reading CPTLB to determine the current TLB slot, then directly accessing the slot using the registers in Table 17.

The Receive FIFO Full interrupt will be generated once all free space in the buffer is used or all TLB slots are filled. The host processor should read the RXFIFOSTA register to determine the cause of the interrupt. To receive additional packets after the buffer is filled, packets must be removed from the buffer by reading them out or discarding them. Packets can be discarded one at a time or all at once by writing '1' to RXCLEAR (RXCN.0).

12.7. Receive Buffer Advanced Status and Control Registers

The receive buffer is controlled and managed through the registers in Table 17. These registers are not commonly accessed by the host processor except for debug purposes.

Table 17. Receive Status and Control Register Summary

Register	Long Name	Address	Description
CPTLB	Current Packet TLB Number	0x1A	Specifies the TLB number (0–7) associated with the current packet.
TLBVALID	TLB Valid Indicator	0x1C	Indicates which TLBs currently have valid packets.
TLBnINFOH TLBnINFOL	TLBn Packet Information	multiple	Specifies information about the packet associated with TLBn (n = 0–7).
TLBLENH TLBLENL	TLBn Packet Length	multiple	Specifies the length of the packet associated with TLBn (n = 0–7).
TLBnADDRH TLBnADDRL	TLBn Packet Address	multiple	Specifies the starting address of the packet associated with TLBn (n = 0–7).
RXFIFOTAILH RXFIFOTAILL	Receive FIFO Buffer Tail Pointer	0x15 0x16	Points to the byte following the last valid byte. This is where new packets are added.
RXFIFOHEADH RXFIFOHEADL	Receive FIFO Buffer Head Pointer	0x17 0x18	Points to the beginning of the current packet and is incremented with each Auto Read.
RXFIFOSTA	Receive FIFO Buffer Status	0x5B	Indicates the cause of the Receive FIFO Buffer Full interrupt.

Register 46. CPTLB: Current Packet TLB Number

R/W	R/W	R/W	R/W	R/W	R/W	R/W	R/W	Reset Value
—	—	—	—	—	CPTLB			00000000
Bit7	Bit6	Bit5	Bit4	Bit3	Bit2	Bit1	Bit0	Address:
								0x1A

Bits 7–3: UNUSED. Read = 00000b; Write = don't care.
Bits 2–0: CPTLB[2:0]: Current Packet TLB Number
The TLB Number (0–7) of the TLB slot associated with the current packet.

Register 47. TLBVALID: TLB Valid Indicator

R/W	R/W	R/W	R/W	R/W	R/W	R/W	R/W	Reset Value
VAL7	VAL6	VAL5	VAL4	VAL3	VAL2	VAL1	VAL0	00000000
Bit7	Bit6	Bit5	Bit4	Bit3	Bit2	Bit1	Bit0	Address: 0x1C

Bits 7–0: TLBVALID: TLB Valid Indicator
Displays the valid bits for the eight TLB slots in a single byte.

Note: This register may be used to clear multiple valid bits simultaneously. For all writes, bits with a value of ‘0’ will cause the associated valid bit to be cleared, and bits with a value of ‘1’ will be ignored. For example, writing 0xFE to this register will clear the valid bit for TLB0.

Register 48. TLBnINFOH: TLBn Information High Byte

R	R	R	R	R	R	R	R	Reset Value
Reserved	RXVLAN	RXUCF	RXPCF	RXCF	RXADATA	BCAST	MCAST	00000000
Bit7	Bit6	Bit5	Bit4	Bit3	Bit2	Bit1	Bit0	

Address: TLB0INFOH: 0x23; TLB1INFOH: 0x29; TLB2INFOH: 0x2F; TLB3INFOH: 0x35;
TLB4INFOH: 0x3B; TLB5INFOH: 0x41; TLB6INFOH: 0x47; TLB7INFOH: 0x4D

Bit 7: Reserved. Read = varies;
Bit 6: RXVLAN: VLAN Type Detected
0: VLAN tagged frame not detected.
1: VLAN tagged frame detected.
Bit 5: RXUNSUP: Unsupported Control Frame
0: Unsupported control frame not detected.
1: Unsupported control frame detected.
Bit 4: RXPCF: Pause Control Frame
0: Pause control frame not detected.
1: Pause control frame detected.
Bit 3: RXCF: Control Frame
0: Control frame not detected.
1: Control frame detected.
Bit 2: RXADATA: Additional Data Received
0: Normal Operation.
1: 1 to 7 additional bits of data received following receipt of the packet.
Bit 1: BCAST: Broadcast Packet
0: Packet is not a broadcast packet.
1: Packet is a broadcast packet.
Bit 0: MCAST: Multicast Packet
0: Packet is not a multicast packet.
1: Packet is a multicast packet.

Register 49. TLBnINFOL: TLBn Information Low Byte

R	R	R	R	R	R	R	R	Reset Value
RXOK	LENGTH	LENERR	CRCERR	Reserved	Reserved	RXLEN	RXDROP	00000000
Bit7	Bit6	Bit5	Bit4	Bit3	Bit2	Bit1	Bit0	

Address: TLB0INFOH: 0x24; TLB1INFOH: 0x2A; TLB2INFOH: 0x30; TLB3INFOH: 0x36;
TLB4INFOH: 0x3C; TLB5INFOH: 0x42; TLB6INFOH: 0x48; TLB7INFOH: 0x4E

Bit 7: RXOK: Receive OK
0: Receive not OK.
1: Receive OK.
Bit 6: LENGTH: Length/Type Field Detection
0: The length/type field of the current packet contains the packet length.
1: The length/type field of the current packet contains the packet type.
Bit 5: LENERR: Length Check Error
0: No errors detected in length field.
1: The length field does not match actual packet length.
Bit 4: CRCERR: CRC Error
0: CRC check passed.
1: CRC check failed.
Bits 3–2: Reserved: Read = varies.
Bit 1: RXLEN: Receive Length
0: Normal Operation.
1: The data received is not long enough to form a valid packet.
Bit 0: RXDROP: Packet Dropped
0: Normal operation.
1: A packet has been dropped.

Register 50. TLBnLENH: TLBn Packet Length High Byte

R	R	R	R	R	R	R	R	Reset Value
								00000000
Bit7	Bit6	Bit5	Bit4	Bit3	Bit2	Bit1	Bit0	

Address: TLB0LENH: 0x25; TLB1LENH: 0x2B; TLB2LENH: 0x31; TLB3LENH: 0x37;
TLB4LENH: 0x3D; TLB5LENH: 0x43; TLB6LENH: 0x49; TLB7LENH: 0x4F

Bits 7–0: TLBnLENH: TLBn Packet Length High Byte
High byte of the packet length for the packet associated with TLBn.

Register 51. TLBnLENL: TLBn Packet Length Low Byte

R	R	R	R	R	R	R	R	Reset Value
								00000000
Bit7	Bit6	Bit5	Bit4	Bit3	Bit2	Bit1	Bit0	

Address: TLB0LENH: 0x26; TLB1LENH: 0x2C; TLB2LENH: 0x32; TLB3LENH: 0x38;
TLB4LENH: 0x3E; TLB5LENH: 0x44; TLB6LENH: 0x4A; TLB7LENH: 0x50

Bits 7–0: TLBnLENL: TLBn Packet Length Low Byte
Low byte of the packet length for the packet associated with TLBn.

Register 52. TLBnADDRH: TLBn Packet Address High Byte

R	R	R	R	R	R	R	R	Reset Value
								00000000
Bit7	Bit6	Bit5	Bit4	Bit3	Bit2	Bit1	Bit0	

Note: The contents of this register are invalid following a buffer overflow event.

Address: TLB0ADDRH: 0x27; TLB1ADDRH: 0x2D; TLB2ADDRH: 0x33; TLB3ADDRH: 0x39;
TLB4ADDRH: 0x3F; TLB5ADDRH: 0x45; TLB6ADDRH: 0x4B; TLB7ADDRH: 0x51

Bits 7–0: TLBnADDRH: TLBn Packet Address High Byte
High byte of the packet starting address for the packet associated with TLBn.

Register 53. TLBnADDRL: TLBn Packet Address Low Byte

R	R	R	R	R	R	R	R	Reset Value
								00000000
Bit7	Bit6	Bit5	Bit4	Bit3	Bit2	Bit1	Bit0	

Note: The contents of this register are invalid following a buffer overflow event.

Address: TLB0ADDRH: 0x28; TLB1ADDRH: 0x2E; TLB2ADDRH: 0x34; TLB3ADDRH: 0x3A;
TLB4ADDRH: 0x40; TLB5ADDRH: 0x46; TLB6ADDRH: 0x4C; TLB7ADDRH: 0x52

Bits 7–0: TLBnADDRL: TLBn Packet Address Low Byte
Low byte of the packet starting address for the packet associated with TLBn.

Register 54. RXFIFOHEADH: Receive FIFO Head Pointer High Byte

R/W	R/W	R/W	R/W	R/W	R/W	R/W	R/W	Reset Value
								00000000
Bit7	Bit6	Bit5	Bit4	Bit3	Bit2	Bit1	Bit0	Address:
								0x17

Bits 7–0: RXFIFOHEADH: Receive FIFO Head Pointer High Byte
High byte of the receive FIFO buffer head pointer.

Register 55. RXFIFOHEADL: Receive FIFO Head Pointer Low Byte

R/W	R/W	R/W	R/W	R/W	R/W	R/W	R/W	Reset Value
								00000000
Bit7	Bit6	Bit5	Bit4	Bit3	Bit2	Bit1	Bit0	Address:
								0x18

Bits 7–0: RXFIFOHEADL: Receive FIFO Head Pointer Low Byte
Low byte of the receive FIFO buffer head pointer.

Register 56. RXFIFOTAILH: Receive FIFO Tail Pointer High Byte

R/W	R/W	R/W	R/W	R/W	R/W	R/W	R/W	Reset Value
								00000000
Bit7	Bit6	Bit5	Bit4	Bit3	Bit2	Bit1	Bit0	Address:
								0x15

Bits 7–0: RXFIFOTAILH: Receive FIFO Tail Pointer High Byte
High byte of the receive FIFO buffer tail pointer.

Register 57. RXFIFOTAILL: Receive FIFO Tail Pointer Low Byte

R/W	R/W	R/W	R/W	R/W	R/W	R/W	R/W	Reset Value
								00000000
Bit7	Bit6	Bit5	Bit4	Bit3	Bit2	Bit1	Bit0	Address:
								0x16

Bits 7–0: RXFIFOTAILL: Receive FIFO Tail Pointer Low Byte
Low byte of the receive FIFO buffer tail pointer.

Register 58. RXFIFOSTA: Receive FIFO Status Register

R/W	R/W	R/W	R/W	R/W	R/W	R/W	R/W	Reset Value
—	—	—	—	—	—	FIFOSTA1	FIFOSTA0	00000000
Bit7	Bit6	Bit5	Bit4	Bit3	Bit2	Bit1	Bit0	Address: 0x5B

This register is set by hardware and is valid after an RX FIFO Full Interrupt is generated or if TLBVALID equals 0xFF.

Bits 7–2: UNUSED. Read = 000000b, Write = don't care.
Bits 1–0: FIFOSTA[1:0]: Receive FIFO Status
00: Initial Value—No information.
01: The last packet successfully received used all available free space in the buffer.
10: The last packet successfully received was the 8th packet in the receive buffer. There is free space remaining in the receive buffer; however, the maximum number of packets in the buffer has been reached. Any future packets received will cause overflow.
Note: Receiving an unsuccessful 9th packet will cause overflow.
11: The last packet successfully received was the eighth packet in the receive buffer and used all available free space in the buffer.

13. Flash Memory

The CP2200/1 has 8 kB of on-chip non-volatile Flash memory fully accessible by the host processor. The last six bytes of this memory space (addresses 0x1FFA to 0x1FFF) are factory preprogrammed and contain a unique 48-bit MAC Address (Individual Address) registered with the IEEE Registration Authority. The most significant byte of the MAC address is at 0x1FFA, and the least significant byte is at 0x1FFF. **The last page of Flash containing the MAC address is erasable, and the user should exercise caution to prevent erasing the MAC Address.**

13.1. Programming the Flash Memory

The Flash memory can be programmed one byte at a time through the parallel host interface. Once cleared to a logic 0, a Flash bit must be erased to set it back to logic 1. A Flash bit may always be changed from logic 1 to logic 0, as long as Flash bytes are only written once between erase cycles. Flash erase operations erase an entire 512 byte sector at a time. Flash write and erase operations are automatically timed by hardware and do not affect the parallel host interface. After initiating a Flash write or erase operation, the host CPU can continue to access the CP2200/1 through the parallel host interface while the Flash operation is taking place. The host is notified with an interrupt request when the Flash write or erase operation is complete. Refer to Table 18 for complete Flash memory electrical characteristics including typical write and erase cycle times.

The Flash memory can be written and erased using the FLASHADDRH:FLASHADDRL, FLASHDATA, and FLASHERASE registers. Once a Flash operation is initiated, the status can be monitored using the FLASHSTA register, or the host can wait for notification by the interrupt signal.

13.1.1. Flash Lock and Key Protection

The Flash memory is protected from errant write and erase operations by a lock and key function. Flash reads are unrestricted. The Flash Lock and Key Register (FLASHKEY) must be written with the correct key codes, in sequence, before each Flash write or erase operation. If a Flash write or erase operation is attempted without first writing the correct key codes to the FLASHKEY register, Flash cannot be written or erased until the next reset. After programming Flash, the CP2200/1 should be reset in order to protect the device from errant Flash operations.

The key codes for unlocking the CP2200/1 are 0xA5 and 0xF1. These codes must be written in sequence to the FLASHKEY register prior to each Flash write or erase operation. **Note: To ensure the integrity of Flash contents, the on-chip V_{DD} Monitor should not be disabled while the Flash memory is unlocked.**

13.1.2. Flash Erase Procedure

Step 1: Write 0xA5 followed by 0xF1 to FLASHKEY.

Step 2: Set FLASHADDRH:FLASHADDRL to any address within the 512-byte page to be erased.

Step 3: Write the value 0x01 to FLASHERASE.

Step 4: Check FLASHSTA to determine when the Flash operation is complete. The Flash Write/Erase Completed interrupt can also be use to determine when the operation completes.

13.1.3. Flash Write Procedure

Step 1: Write 0xA5 followed by 0xF1 to FLASHKEY.

Step 2: If the byte to be written is not 0xFF, then erase the page containing the byte.

Step 3: Set FLASHADDRH:FLASHADDRL to the address of the byte to be written.

Step 4: Write the value to be written to the FLASHDATA register.

Step 5: Check FLASHSTA to determine when the Flash operation is complete. The Flash Write/Erase Completed interrupt can also be used to determine when the operation is complete.

13.2. Reading the Flash Memory

Flash reads occur much faster than Flash write or erase operations and are completed within the minimum read strobe time specified by the parallel host interface. Flash is read using the FLASHADDRH:FLASHADDRL, FLASHDATA, and FLASHAUTORD registers. The FLASHAUTORD register provides an efficient method of accessing sequential data in Flash by automatically incrementing the Flash address pointer after each read.

13.2.1. Flash Read Procedure

Step 1: Set FLASHADDRH:FLASHADDRL to the address of the byte to be read.

Step 2: Read the value of the byte from FLASHDATA.

13.2.2. Multiple Byte Flash Read Procedure

Step 1: Set FLASHADDRH:FLASHADDRL to the address of the first byte to be read.

Step 2: For each byte, read the value from FLASHAUTORD.

Table 18. Flash Electrical Characteristics

V_{DD} = 3.1 to 3.6 V, –40 to +85 °C unless otherwise specified.

Parameters	Conditions	Min	Typ	Max	Units
Flash Size		8192	—	—	bytes
Endurance		20k	100k	—	Erase/ Write
Erase Cycle Time		—	11	—	ms
Write Cycle Time		40	55	70	µs

13.3. Flash Access Registers

The CP2200 Flash is accessed through the registers in Table 17. See the register tables following Table 17 for detailed register descriptions

Table 19. Flash Access Register Summary

Register	Long Name	Address	Description
FLASHSTA	Flash Status	0x7B	Used to determine the status of a Flash write or erase operation.
FLASHKEY	Flash Lock and Key	0x67	Write-only register allowing the host to unlock the Flash for writing or erasing.
FLASHADDRH FLASHADDRL	Flash Address Register High and Low Bytes	0x69 0x68	16-bit Address used for Flash operations.
FLASHDATA	Flash Read/Write Data Register	0x06	Data register used for writing or reading a single byte of Flash.
FLASHAUTORD	Flash AutoRead Data Register	0x05	Data register used for reading a block of sequential data stored in Flash. Each read from this register increments the Flash address register by 1.
FLASHERASE	Flash Erase	0x6A	Initiates a Flash erase operation.

Register 59. FLASHSTA: Flash Status Register

R/W	R/W	R/W	R/W	R	R	R	R	Reset Value
—	—	—	—	FLBUSY	Reserved	FLWRITE	FLERASE	00000000
Bit7	Bit6	Bit5	Bit4	Bit3	Bit2	Bit1	Bit0	Address: 0x7B

Note: To determine when a Flash operation completes, the FLBUSY bit should be polled or software should wait for the Flash Write/Erase Operation Complete Interrupt to occur.

Bits 7–4: UNUSED. Read = 0000b, Write = don't care.
Bit 3: FLBUSY: FLASH Busy Indicator
This bit indicates when a FLASH write or erase operation is in progress.
0: FLASH is idle.
1: FLASH write/erase operation is currently in progress.
Bit 2: Reserved.
Bit 1: FLWRITE: FLASH Write
0: The last Flash operation completed was not a Flash write.
1: The last Flash operation completed was a Flash write.
Bit 0: FLERASE: FLASH Erase
0: The last Flash operation completed was not a Flash erase.
1: The last Flash operation completed was a Flash erase.

Register 60. FLASHKEY: FLASH Lock and Key Register

R/W	R/W	R/W	R/W	R/W	R/W	R/W	R/W	Reset Value
								00000000
Bit7	Bit6	Bit5	Bit4	Bit3	Bit2	Bit1	Bit0	Address:
								0x67

Bits 7-0: FLKEY: Flash Lock and Key Register
This register must be written to unlock the Flash for writing or erasing. To unlock the Flash, first write 0xA5 and then 0xF1 to this register. The V_{DD} Monitor should not be disabled while the Flash is unlocked. The device must be unlocked prior to each Flash write/erase operation.

Register 61. FLASHADDRH: FLASH Address Register High Byte

R/W	R/W	R/W	R/W	R/W	R/W	R/W	R/W	Reset Value
								00000000
Bit7	Bit6	Bit5	Bit4	Bit3	Bit2	Bit1	Bit0	Address:
								0x69

Bits7–0: FLASHADDRH: Flash Address Register High Byte
Holds the most significant eight bits of the target FLASH address.

Register 62. FLASHADDRL: FLASH Address Register Low Byte

R/W	R/W	R/W	R/W	R/W	R/W	R/W	R/W	Reset Value
								00000000
Bit7	Bit6	Bit5	Bit4	Bit3	Bit2	Bit1	Bit0	Address:
								0x68

Bits7–0: FLASHADDRL: Flash Address Register Low Byte
Holds the least significant eight bits of the target FLASH address.

Register 63. FLASHDATA: FLASH Read/Write Data Register

R/W	R/W	R/W	R/W	R/W	R/W	R/W	R/W	Reset Value
								00000000
Bit7	Bit6	Bit5	Bit4	Bit3	Bit2	Bit1	Bit0	Address:
								0x06

Bits7–0: FLASHDATA: Flash Read/Write Data Register
Read:
Value of the Flash byte at the location specified by FLASHADDRH:FLASHADDRL.

Write:
Initiates a Flash write operation to the Flash byte at the address in FLASHADDRH:FLASHADDRL. The Flash memory must be unlocked, and the target Flash byte should have a value of 0xFF (value of erased Flash).

Register 64. FLASHAUTORD: FLASH AutoRead Data Register

R	R	R	R	R	R	R	R	Reset Value
								00000000
Bit7	Bit6	Bit5	Bit4	B	Bit2	Bit1	Bit0	Address:
								0x05

Bits7–0: FLASHAUTORD: Flash AutoRead Data Register
Reads from this register return the value of the Flash byte at the location specified by the Flash Address Register. The Flash Address Register is automatically incremented by 1 after the read.

Register 65. FLASHERASE: FLASH Erase Register

R/W	R/W	R/W	R/W	R/W	R/W	R/W	R/W	Reset Value
—	—	—	—	—	—	Reserved	FLEGO	00000000
Bit7	Bit6	Bit5	Bit4	Bit3	Bit2	Bit1	Bit0	Address:
								0x6A

Bits 7–2: UNUSED. Read = 000000b, Write = don’t care.
Bit 1: Reserved. Must write 0b.
Bit 0: FLEGO: Flash Erase Start.
Writing a ‘1’ to this bit initiates a Flash erase operation on the 512-byte page of Flash containing the Flash byte at the location specified in the Flash Address Register. The Flash memory must be unlocked prior to starting a Flash erase operation.

14. Media Access Controller (MAC)

The CP2200/1 has an IEEE 802.3 compliant Ethernet Media Access Controller (MAC). The MAC can be configured to automatically pad short frames (full duplex mode only), append CRC, and perform frame length checking. A loopback mode separate from PHY loopback is also provided for system debugging. The MAC is configured through nine indirect 16-bit registers summarized in Table 20.

14.1. Initializing the MAC

MAC initialization occurs after the physical layer initialization and typically occurs once after each reset or Auto-Negotiation Complete interrupt. Most MAC indirect registers can be left at their reset values. See “6.2. Reset Initialization” on page 18 for the complete reset initialization procedure. The following are the steps required to initialize the MAC:

Step 1: Determine if the physical layer is set to full-duplex or half-duplex. The MAC must be set to the same duplex mode as the physical layer before sending or receiving any packets.

Step 2: **Write 0x40B3 (full-duplex) or 0x4012 (half-duplex) to MACCF.** The appropriate bits in this register may also be set or cleared to change padding options or MAC behavior.

Step 3: **Write 0x0015 (full-duplex) or 0x0012 (half-duplex) to IPGT**.

Step 4: **Write 0x0C12 to IPGR**.

Step 5: **Write 0x05EE to MAXLEN**.

Step 6: Program the 48-bit Ethernet MAC Address by **writing to MACAD0:MACAD1:MACAD2.**

Step 7: **Write 0x0001 to MACCN to enable reception.** If loopback mode or flow control is desired, set the appropriate bits to enable these functions.

14.2. Accessing the Indirect MAC Registers

The indirect MAC registers are accessed through four direct mapped registers: MACADDR, MACDATAH, MACDATAL, and MACRW. The MAC registers can be accessed using the following procedure:

Step 1: Write the address of the indirect register to MACADDR.

Step 2: If writing a value to the indirect register, write a 16-bit value to MACDATAH:MACDATAL.

Step 3: Write any value to MACRW to transfer the contents of MACDATAH:MACDATAL to the indirect register.

Step 4: Perform a read on MACRW to transfer the contents of the indirect register to MACDATAH:MACDATAL. The MACDATAH and MACDATAL registers may now be directly read to determine the contents of the indirect register.

Register 66. MACADDR: MAC Indirect Address

R/W	R/W	R/W	R/W	R/W	R/W	R/W	R/W	Reset Value
								00000000
Bit7	Bit6	Bit5	Bit4	Bit3	Bit2	Bit1	Bit0	Address:
								0x0A

Bits 7–0: MACADDR: MAC Indirect Address
Indirect MAC register address targeted by reads/writes to MACRW.

Register 67. MACDATAH: MAC Data High Byte

R/W	R/W	R/W	R/W	R/W	R/W	R/W	R/W	Reset Value
								00000000
Bit7	Bit6	Bit5	Bit4	Bit3	Bit2	Bit1	Bit0	Address:
								0x0B

Bits 7–0: MAC Data High Byte
Holds the most significant 8-bits of data read or written to an indirect MAC register.

Register 68. MACDATAL: MAC Data Low Byte

R/W	R/W	R/W	R/W	R/W	R/W	R/W	R/W	Reset Value
								00000000
Bit7	Bit6	Bit5	Bit4	Bit3	Bit2	Bit1	Bit0	Address:
								0x0C

Bits 7–0: MAC Data Low Byte
Holds the least significant 8-bits of data read or written to an indirect MAC register.

Register 69. MACRW: MAC Read/Write Initiate

R/W	R/W	R/W	R/W	R/W	R/W	R/W	R/W	Reset Value
								00000000
Bit7	Bit6	Bit5	Bit4	Bit3	Bit2	Bit1	Bit0	Address:
								0x0D

Bits 7–0: MAC Read/Write Initiate
Initiates a read or write to the indirect MAC register at the address stored in MACADDR.
Write: The contents of MACDATAH:MACDATAL are transferred to the target MAC register.
Read: The contents of the target MAC register are transferred to MACDATAH:MACDATAL.

14.3. Indirect MAC Register Descriptions

The MAC is configured through nine indirect 16-bit registers listed in Table 20. See the figures following Table 20 for detailed register descriptions.

Table 20. Indirect MAC Register Summary

Register	Long Name	Address	Description
MACCN	MAC Control	0x00	Used to enable reception and other options.
MACCF	MAC Configuration	0x01	Used to configure padding options and other settings.
IPGT	Back-to-Back Interpacket Delay	0x02	Sets the Back-to-Back Interpacket Delay.
IPGR	Non-Back-to-Back Interpacket Delay	0x03	Sets the Non-Back-to-Back Interpacket Delay.
CWMAXR	Collision Window and Maximum Retransmit	0x04	Sets the collision window size and the maximum number of retransmits allowed.
MAXLEN	Maximum Frame Length	0x05	Sets the maximum receive frame length.
MACAD0 MACAD1 MACAD2	MAC Address	0x10 0x11 0x12	Sets the MAC address of the local device.

Indirect Register 1. MACCN: MAC Control Register

R/W	R/W	R/W	R/W	R/W	R/W	R/W	R/W
Reserved	RANDRST	Reserved					
Bit15	Bit14	Bit13	Bit12	Bit11	Bit10	Bit9	Bit8

R/W	R/W	R/W	R/W	R/W	R/W	R/W	R/W	Default Value
Reserved			LOOPBCK	TXPAUSE	RXPAUSE	Reserved	RCVEN	0x8000
Bit7	Bit6	Bit5	Bit4	Bit3	Bit2	Bit1	Bit0	MACADDR: 0x00

Bit 15: Reserved. Read = varies; Must write 0b.
Bit 14: RANDRST: Random Number Generator Reset
Writing a ‘1’ to this bit resets the random number generator within the transmit function.
Bits 13–5: Reserved. Read = varies; Must write 000000000b.
Bit 4: LOOPBCK: Loopback Mode Enable Bit
Note: MAC Loopback Mode is independent of the physical layer loopback mode.
0: Normal operation.
1: MAC transmit data is internally looped back as MAC receive data.
Bit 3: TXPAUSE: TX Flow Control Enable Bit (Full-Duplex Only)
0: PAUSE control frames are blocked.
1: PAUSE control frames are allowed to pass through the MAC.
Bit 2: RXPAUSE: RX Flow Control Enable Bit (Full-Duplex Only)
0: PAUSE control frames received from the physical layer are ignored.
1: PAUSE control frames received from the physical layer are acted upon.
Bit 1: Reserved. Read = 0; Must write 0b.
Bit 0: RCVEN: Receive Enable
0: The MAC blocks control frames from reaching the receive interface. The MAC blocks all received packets from the receive interface.
1: The MAC allows received packets to reach the receive interface.

Indirect Register 2. MACCF: MAC Configuration Register

R/W	R/W	R/W	R/W	R/W	R/W	R/W	R/W
Reserved	ABORTD	EBBPD	EBD	Reserved		RLPRE	PUREPRE
Bit15	Bit14	Bit13	Bit12	Bit11	Bit10	Bit9	Bit8

R/W	R/W	R/W	R/W	R/W	R/W	R/W	R/W	Default Value
PADMD1	PADMD0	PADEN	CRCEN	PHEADER	Reserved	LENCHK	FLLDPLX	0x0000
Bit7	Bit6	Bit5	Bit4	Bit3	Bit2	Bit1	Bit0	MACADDR: 0x01

Bit 15: Reserved. Read = 0b; Must write 0b.
Bit 14: ABORTD: Abort Disable Bit
0: MAC will abort when excessive delay is detected and update the transmit status vector.
1: MAC will attempt to transmit indefinitely as specified in IEEE 802.3.
Bit 13: EBBPD: Exponential Backoff after Back Pressure Disable Bit (Half-Duplex Only)
0: After incidentally causing a collision during back pressure, the MAC will use the exponential backoff algorithm as specified in IEEE 802.3.
1: After incidentally causing a collision during back pressure, the MAC will immediately transmit without using the exponential backoff algorithm.
Bit 12: EBD: Exponential Backoff Disable (Half-Duplex Only)
0: MAC will use the exponential backoff algorithm as specified in IEEE 802.3.
1: MAC will immediately retransmit following a collision.
Bits 11–10: Reserved. Read = 00b; Write = don't care.
Bit 9: RLPRE: Reject Long Preamble
0: MAC allows any length preamble as specified in IEEE 802.3.
1: MAC rejects packets with a preamble greater than 12 bytes in length.
Bit 8: PUREPRE: Pure Preamble Enforcement
0: No preamble checking is performed.
1: MAC will verify the content of the preamble to ensure it contains 0x55 and is error-free. Packets with an invalid preamble will be rejected.
Bit 7–6: PADMD[1:0]: Pad Mode
Note: This bit field is ignored if PADEN is cleared to '0'. See Table 21 for a complete description.
Bit 5: PADEN: Pad Enable Bit (must be set to 0 in half-duplex operation)
Note: See Table 21 for a complete description.
Bit 4: CRCEN: CRC Enable Bit
Note: This bit must be set to '1' if padding is enabled.
0: CRC will not be appended. Frames presented to the MAC must contain CRC.
1: CRC will be appended.

Indirect Register 2. MACCF: MAC Configuration Register (Continued)

Table 21. Pad Operation

PADMD1[7]	PADMD0[6]	PADEN[5]	CRCEN[4]	Action
x	x	0	0	No padding added on transmitted packets, check CRC
x	x	0	1	No padding added on transmitted packets, append CRC
0	0	1	1	Pad short frames to 60 bytes, append CRC
x	1	1	1	Pad short frames to 64 bytes, append CRC
1	0	1	1	Auto Detect Tagged VLAN Frames (IEEE802.1q) If untagged: Pad to 60 bytes, append CRC If tagged: Pad to 64 bytes, append CRC

Bit 3: PHEADER: Proprietary Header Select Bit
0: No proprietary header exists on the front of IEEE 802.3 frames.
1: Four bytes of proprietary header information exist on the front of IEEE 802.3 frames. These bytes will be ignored by the CRC function.

Bit 2: Reserved. Read = 0b; Must write 0b.

Bit 1: LENCHK: Frame Length Checking Enable Bit
0: Frame length checking is disabled.
1: Transmit and receive frame lengths are compared to the Length/Type field. If the Length/Type field represents a length then the check is performed. Mismatches are reported in the Transmit/Receive status vectors.

Bit 0: FLLDPLX: Full-Duplex Mode Enable Bit
0: MAC operates in half-duplex mode.
1: MAC operates in full-duplex mode.

Indirect Register 3. IPGT: Back-to-Back Inter-Packet Gap Register

R/W	R/W	R/W	R/W	R/W	R/W	R/W	R/W	
Reserved								
Bit15	Bit14	Bit13	Bit12	Bit11	Bit10	Bit9	Bit8	
R/W	R/W	R/W	R/W	R/W	R/W	R/W	R/W	Default Value
Reserved	IPGT							0x0000
Bit7	Bit6	Bit5	Bit4	Bit3	Bit2	Bit1	Bit0	MACADDR: 0x02

Bits 15–7: Reserved. Read = 000000000b; Must write 000000000b.

Bits 6–0: IPGT: Back-to-Back Inter-Packet Gap Register

Sets the minimum delay between the end of any transmitted packet and the start of a new packet. In Full-Duplex mode, the register value should be set to the desired number of time units (each time unit is 0.46 µs) minus 3. The recommended setting is 0x15 (21d), which yields 9.6 µs.

In Half-Duplex mode, the register value should be set to the desired number of time units (each time unit is 0.46 µs) minus 6. The recommended setting is 0x12 (18d), which yields 9.6 µs.

Indirect Register 4. IPGR: Non-Back-to-Back Inter-Packet Gap Register

R/W	R/W	R/W	R/W	R/W	R/W	R/W	R/W	
Reserved	IPGR1							
Bit15	Bit14	Bit13	Bit12	Bit11	Bit10	Bit9	Bit8	
R/W	R/W	R/W	R/W	R/W	R/W	R/W	R/W	Default Value
Reserved	IPGR2							0x0000
Bit7	Bit6	Bit5	Bit4	Bit3	Bit2	Bit1	Bit0	MACADDR: 0x03

Bit 15: Reserved. Read = 0b; Must write 0b.

Bits 14–8: IPGR1: Non-Back-to-Back Inter-Packet Gap Part 1

Sets the optional carrier sense window referenced in IEEE 802.3 Section 4.2.3.2.1. The range of values for this bit field are 0x00 to IPGR2. The recommended value is 0x0C.

Bit 7: Reserved. Read = 0b; Must write 0b.

Bits 6–0: IPGR2: Non-Back-to-Back Inter-Packet Gap Part 2

Sets the Non-Back-to-Back Inter-Packet Gap. The recommended value is 0x12, which represents a minimum inter-packet gap of 9.6 µs.

Indirect Register 5. CWMAXR: Collision Window and Maximum Retransmit Register

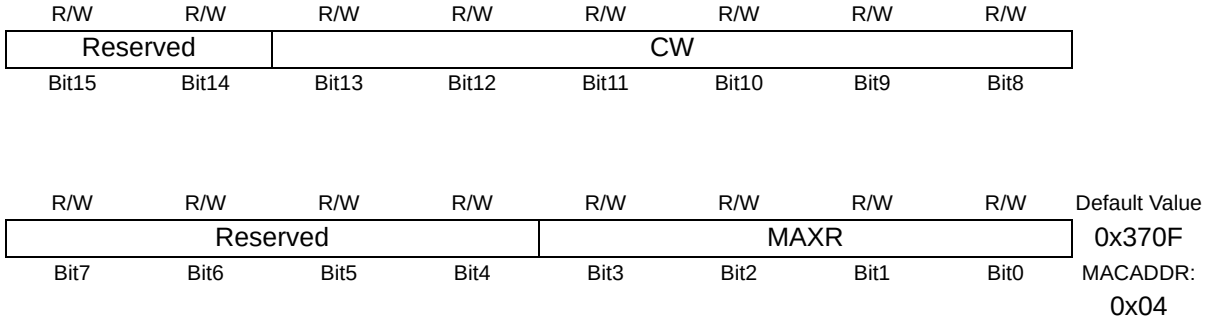

Note: This register does not require initialization and will be left at its reset value by most systems.

Bits 15–14: Reserved. Read = 00b; Must write 00b.

Bits 13–8: CW: Collision Window

Sets the collision window in which collisions occur in a properly configured network. The collision window is specified in the number of bytes from the start of transmission. The preamble and frame delimiter are included in the byte count. Its default of 0x37 corresponds to the count of frame bytes at the end of the window.

Bits 7–4: Reserved. Read = 0000b; Must write 0000b.

Bits 3–0: MAXR: Maximum Retransmit Attempts

Sets the maximum number of retransmit attempts following a collision before aborting the packet due to excessive collisions. IEEE 802.3 specifies a maximum value of 0x0F (15d).

Indirect Register 6. MAXLEN: Maximum Frame Length Register

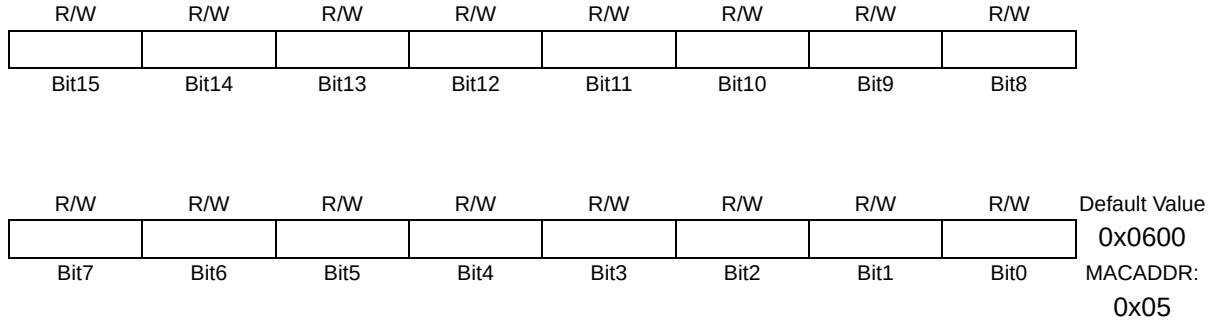

Note: This register does not require initialization and will be left at its reset value will be set to 1518 (0x05EE) by most systems.

Bits 15–0: MAXF: Maximum Frame Length

Specifies the maximum length of a receive frame. The default value is 0x600 (1536 octets). This register should be programmed if a shorter maximum length restriction is desired. Examples of shorter frame lengths are untagged (1518 octets) and tagged (1522 octets). If a proprietary header is allowed, this field should be adjusted accordingly.

Indirect Register 7. MACAD0: MAC Address 0

R/W	R/W	R/W	R/W	R/W	R/W	R/W	R/W	
OCTET6								
Bit15	Bit14	Bit13	Bit12	Bit11	Bit10	Bit9	Bit8	
R/W	R/W	R/W	R/W	R/W	R/W	R/W	R/W	Default Value
OCTET5								0x0000
Bit7	Bit6	Bit5	Bit4	Bit3	Bit2	Bit1	Bit0	MACADDR: 0x10

Bits 15–8: OCTET6: MAC Address, 6th Octet
This field holds the sixth (least significant) octet of the MAC address.
Bits 7–0: OCTET5: MAC Address, 5th Octet
This field holds the fifth octet of the MAC address.

Indirect Register 8. MACAD1: MAC Address 1

R/W	R/W	R/W	R/W	R/W	R/W	R/W	R/W	
OCTET4								
Bit15	Bit14	Bit13	Bit12	Bit11	Bit10	Bit9	Bit8	
R/W	R/W	R/W	R/W	R/W	R/W	R/W	R/W	Default Value
OCTET3								0x0000
Bit7	Bit6	Bit5	Bit4	Bit3	Bit2	Bit1	Bit0	MACADDR: 0x11

Bits 15–8: OCTET4: MAC Address, 4th Octet
This field holds the fourth octet of the MAC address.
Bits 7–0: OCTET3: MAC Address, 3rd Octet
This field holds the third octet of the MAC address.

Indirect Register 9. MACAD2: MAC Address 2

R/W	R/W	R/W	R/W	R/W	R/W	R/W	R/W	
OCTET2								
Bit15	Bit14	Bit13	Bit12	Bit11	Bit10	Bit9	Bit8	
R/W	R/W	R/W	R/W	R/W	R/W	R/W	R/W	Default Value
OCTET1								0x0000
Bit7	Bit6	Bit5	Bit4	Bit3	Bit2	Bit1	Bit0	MACADDR: 0x12

Bits 15–8: OCTET2: MAC Address, 2nd Octet
This field holds the second octet of the MAC address.
Bits 7–0: OCTET1: MAC Address, first Octet
This field holds the first (most significant) octet of the MAC address.

15. Physical Layer (PHY)

The CP2200/1 has an IEEE 802.3 compliant 10 BASE-T Ethernet physical layer transceiver that includes a receiver, transmitter, auto-negotiation, loopback, jabber, smart squelch, polarity correction, and link integrity functions. If enabled, the auto-negotiation function automatically negotiates the speed of the data link and the duplex mode. Both half-duplex and full-duplex modes are supported.

The physical layer is controlled and monitored through three registers: PHYCN, PHYCF, and PHYSTA. The various functions and test modes that can be enabled and monitored through these registers are explained in the following sections.

15.1. Auto-Negotiation and Duplex Mode

Auto-negotiation allows the CP2200/1 to be connected to any 10/100/1000 BASE-T Ethernet network and advertise its capabilities. Auto-negotiation uses a series of fast link pulses to send 16-bit link code words. Many conditions (e.g., failure to detect fast link pulses) can cause auto-negotiation to fail. On failure, the Auto-Negotiation Failed interrupt will be generated, and/or the Auto-Negotiation Complete Interrupt will not be generated. The PHYSTA status register will indicate the cause of failure, and the physical layer will default to half-duplex mode. On success, the Auto-Negotiation Complete interrupt will be generated, and the Auto-Negotiation Failed interrupt will not be generated. Both interrupts must be checked to ensure that Auto-Negotiation has succeeded.

The advertised link speed will always be 10BASE-T. The duplex mode (half or full) will be negotiated, and full duplex will be selected if supported by the network. Full duplex mode allows the physical layer to send and receive data at the same time. In half duplex mode, data can only be transmitted or received at any given time. Full duplex mode provides overall higher performance and reduces collisions. Software may also choose to advertise its ability to send and receive PAUSE control packets by setting ADPAUSE (PHYCF.2) to ‘1’.

Important Note: When using auto-negotiation, the auto-negotiation enable bit AUTONEG (PHYCF.4) must be set to ‘1’ prior to enabling the physical layer. To restart auto-negotiation, the physical layer (transmitter, receiver, or both) must be disabled and reenabled.

Important Note: The CP220x supports legacy link partners that cannot auto-negotiate. If the link partner cannot autonegotiate, then the physical layer will default to half-duplex mode.

15.2. Auto-Negotiation Synchronization

The CP220x implements an autonegotiation scheme where autonegotiation is attempted for 250 ms, then a break-link delay of 1.5 seconds is inserted between auto-negotiation attempts. When the break-link delay is active, the CP220x does not listen for incoming auto-negotiation requests and does not attempt to auto-negotiate. If one device starts autonegotiation while the other device is in its “break-link period”, the autonegotiation attempt will fail. If the devices are unsyncronized, this can lead to a situation where each device attempts to autonegotiate in the other device’s “break-link period”. This can be solved by synchronizing one or both devices using the following procedure:

Step 1: Disable the physical layer by writing 0x00 to the PHYCN register.

Step 2: Enable the physical layer with link integrity test and auto-negotiation turned off.

1. Disable the transmitter power save mode (TXPWR = 0x80) and set physical layer options (PHYCF = SMSQ | JABBER | ADPAUSE | AUTOPOL).
2. Enable the physical layer (PHYEN = 1).
3. Wait for the physical layer to power up. See Physical Layer Startup Time in Table 22 on page 93.
4. Enable the transmitter and receiver (TXEN = 1 and RXEN = 1).

Step 3: Poll the Wake-on-LAN interrupt flag (WAKEINT) to detect if a link partner is present.

1. If there is a signal, wait 250 ms then begin autonegotiation.
2. If there is no signal, wait 1.5 seconds then begin autonegotiation.

15.3. Loopback Mode

Loopback Mode provides the ability to transfer data from the physical layer's output directly to it's input to aid in system debugging. When PHYCN.3 is set to '1', transmit data is looped back to the receiver via an internal analog path. The transmit drivers and receive input circuitry are bypassed, isolating the device from the network. This prevents network traffic from affecting the result of any system self-tests and guarantees a collision-free environment.

15.4. Link Integrity Function

The Link Integrity function provides the ability to detect and respond to a 10 BASE-T link failure. When such a failure is detected, the transmitter and receiver are automatically disabled, and the state of the link is reported in LINKSTA (PHYCN.0). The host can disable the link integrity function by clearing LINKINT (PHYCF.6) to '0'. When the link integrity function is disabled, the physical layer will operate regardless of the presence of link pulses.

15.5. Receiver Smart Squelch and Automatic Polarity Correction

The physical layer receiver can detect and correct for noise or incorrect polarity of the received signal. If the receiver Smart Squelch feature is enabled by setting SMSQ (PHYCF.7) to '1', the receiver circuitry performs a combination of amplitude and timing measurements (in accordance with IEEE 802.3) to determine the validity of received data. This prevents noise from falsely triggering the receiver in the absence of valid data.

Automatic polarity correction can automatically detect and correct the polarity of the received data to compensate for a wiring error at either end of the 10 BASE-T cable. When automatic polarity correction is enabled by setting AUTOPOL (PHYCF.1) to '1', the polarity of the receive data is indicated in POLREV (PHYCN.1). When automatic polarity detection is disabled, the polarity of the receive data can be manually reversed by setting REVPOL (PHYCF.0) to '1'.

15.6. Transmitter Jabber Function

Provides the ability to automatically disable the transmitter if software attempts to transmit a packet longer than the maximum allowed packet length (per IEEE 802.3). The host processor will be notified via the Jabber Detected Interrupt if a jabber condition is automatically handled by the hardware. Enabling the jabber function is recommended to ensure that the embedded system using the CP2200/1 for Ethernet communication does not generate a jabber condition on the wire.

15.7. Initializing the Physical Layer

The physical layer should be configured to the desired mode prior to setting the enable bit PHYEN (PHYCN.7). The following procedure should be used to initialize the physical layer:

Step 1: If auto-negotiation is used, implement the synchronization procedure in Section 15.2 on page 88.

Step 2: Disable the physical layer by writing 0x00 to the PHYCN register.

Step 3: Configure Desired Options using the PHYCN and PHYCF registers:

1. Specify the Duplex Mode or enable Auto-Negotiation.
2. Enable or Disable Loopback Mode.
3. Disable the transmitter power save mode (TXPWR = 0x80).
4. Enable the desired functions such as Receiver Smart Squelch, Automatic Polarity Correction, Link Integrity, Jabber Protection, and PAUSE packet capability advertisement.
5. If Automatic Polarity Correction is disabled, manually set the desired polarity.

Step 4: Enable the physical layer:

1. Enable the physical layer (PHYEN = 1).
2. Wait for the physical layer to power up. See Physical Layer Startup Time in Table 22 on page 93.
3. Enable the transmitter and receiver (TXEN = 1 and RXEN = 1).

Step 5: Wait for auto-negotiation to complete. If auto-negotiation is not enabled, software may wait for a valid link or go directly to MAC Initialization.

Step 6: Enable the desired Activity, Link, or Activity/Link LEDs using the Register 15, “IOPWR: Port Input/Output Power Register,” on page 45.

Step 7: Initialize the MAC to the same duplex mode reported by the physical layer in the PHYCN register.

Note: Step 6 and Step 7 are repeated in the reset initialization procedure. Software only needs to perform these steps once.

Register 70. PHYCN: Physical Layer Control Register

R/W	R/W	R/W	R/W or RO	R/W	R	R	R	Reset Value
PHYEN	TXEN	RXEN	DPLXMD	LBMD	LPRFAULT	POLREV	LINKSTA	00000000
Bit7	Bit6	Bit5	Bit4	Bit3	Bit2	Bit1	Bit0	Address: 0x78

Important Note: When using auto-negotiation, the auto-negotiation enable bit, AUTONEG (PHYCF.4), must be set to “1” prior to setting PHYEN, TXEN, and RXEN to 1. To restart auto-negotiation, clear one of the three enable bits (PHYEN, TXEN, and RXEN) to “0” then set it back to “1”.

Bit 7: PHYEN: Physical Layer Enable
0: The physical layer is placed in a low-power state with limited functionality.
1: The physical layer is placed in a normal power state and is fully functional.

Bit 6: TXEN: Transmitter Enable
0: Physical Layer’s transmitter is placed in a low-power state. Packet transmission and Link Pulse Generation Functions are disabled.
1. Physical layer’s transmitter is enabled.

Bit 5: RXEN: Receiver Enable
0: Physical layer’s receiver is placed in a low-power state. Packet reception is disabled.
1: Physical layer’s receiver is enabled.

Bit 4: DPLXMD: Full-duplex Mode Enable Bit
Note: This bit is read-only when Auto-Negotiation is enabled.
0: Half-duplex mode is selected.
1: Full-duplex mode is selected.

Bit 3: LBMD: Loopback Mode Enable Bit
Note: Loopback mode is automatically disabled if a jabber condition is detected.
0: Loopback mode is disabled.
1: Loopback mode is enabled.

Bit 2: LPRFAULT: Link Partner Remote Fault (Local Fault) Indicator
0: Normal operation.
1: The link partner has detected a link fault and has sent notification during auto-negotiation. This condition can occur if the local transmitter is disabled and link pulses are no longer generated.

Bit 1: POLREV: Polarity Reversed Indicator
0: Incorrect link polarity has not been detected.
1: Incorrect link polarity detected. Link polarity has been automatically reversed.

Bit 0: LINKSTA: Link Status Indicator
0: Link is bad.
1: Link is good.

Register 71. PHYCF: Physical Layer Configuration Register

R/W	R/W	R/W	R/W	R/W	R/W	R/W	R/W	Reset Value
SMSQ	LINKINTG	JABBER	AUTONEG	Reserved	ADPAUSE	AUTOPOL	REVPOL	00000000
Bit7	Bit6	Bit5	Bit4	Bit3	Bit2	Bit1	Bit0	Address: 0x79

Bit 7: SMSQ: Receiver Smart Squelch Enable Bit
0: Receiver Smart Squelch is disabled.
1: Receiver Smart Squelch is enabled.

Bit 6: LINKINT: Link Integrity Function Enable Bit
Note: When enabled, the link integrity function will automatically disable the transmitter and receiver and update LINKSTA (PHYCN.0) if a link failure is detected.
0: Link integrity function is disabled.
1. Link integrity function is enabled.

Bit 5: JABBER: Jabber Protection Function Enable Bit
Note: When enabled, the jabber protection function will automatically disable loopback mode if a jabber condition is detected.
0: Jabber protection function is disabled.
1: Jabber protection function is enabled.

Bit 4: AUTONEG: Auto-Negotiation Enable Bit
0: Auto-Negotiation function is disabled.
1: Auto-Negotiation function is enabled.

Bit 3: Reserved. Read = 0b; Must write 0b.

Bit 2: ADPAUSE: Advertise Pause Packet Capability
0: Indicates (during auto-negotiation) that the CP2200/01 does not have pause packet capability.
1: Indicates (during auto-negotiation) that the CP2200/01 does have pause packet capability.

Bit 1: AUTOPOL: Automatic Polarity Correction Enable Bit
0: Automatic receiver polarity correction is disabled.
1: Automatic receiver polarity correction is enabled.

Bit 0: REVPOL: Polarity Reversal Bit
Note: This bit is ignored if Automatic Polarity Correction is enabled.
0: The receiver polarity is normal.
1: The receiver polarity is reversed.

Register 72. PHYSTA: Physical Layer Status Register

R	R	R	R	R	R	R	R	Reset Value
LGCILF	LGCLSF	AKDLF	AKDAMF	AKDCMF	ABDLF	ABDAKMF	ABDABMF	00000000
Bit7	Bit6	Bit5	Bit4	Bit3	Bit2	Bit1	Bit0	Address: 0x80

Note: The Auto-Negotiation states and error types are described in Clause 28 of IEEE 802.3.

Bit 7: LGCILF: Link Good Check Incompatible Link Failure
0: Normal operation.
1: Auto-negotiation failed due to an incompatible link.

Bit 6: LGCLSF: Link Good Check Line Status Failure
0: Normal operation.
1. Auto-negotiation failed due to a link fault.

Bit 5: AKDLF: Acknowledge Detect Link Failure
0: Normal operation.
1: Auto-negotiation failed due to lack of reception of fast link pulses.

Bit 4: AKDAMF: Acknowledge Detect Acknowledge Match Failure
0: Normal operation.
1: Auto-negotiation failed due to reception of a link code word with the ACK bit cleared.

Bit 3: AKDCMF: Acknowledge Detect Consistency Match Failure
0: Normal operation.
1: Auto-negotiation failed due to reception of inconsistent link code words.

Bit 2: ABDLF: Ability Detect Link Failure
0: Normal operation.
1: Auto-negotiation failed due to lack of reception of fast link pulses.

Bit 1: ABDAKMF: Ability Detect Acknowledge Match Failure
0: Normal operation.
1: Auto-negotiation failed due to the reception of link code word(s) with the ACK bit set.

Bit 0: ABDABMF: Ability Detect Ability Match Failure
0: Normal operation.
1: Auto-negotiation failed due to the lack of reception of three consecutive link code words.

Table 22. 10BASE-T Interface DC Electrical Characteristics

V_{DD} = 3.1 to 3.6 V, –40 to +85 °C unless otherwise specified.

Parameters	Conditions	Min	Typ	Max	UNITS
Transmitter Differential Output Voltage (Peak)		2.2	2.5	2.8	V
Receiver Normal Squelch Level (Peak)		—	585	—	mV
Receiver Low Squelch Level		—	330	—	mV
Physical Layer Startup Time		—	1	—	ms

Table 23. 10BASE-T Transmit Switching Characteristics

V_{DD} = 3.1 to 3.6 V, –40 to +85 °C unless otherwise specified.

Symbol	Parameters	Min	Typ	Max	UNITS
T_{TXJIT}	TX Pair Jitter into 100 Ω Load	—	1	—	ns
T_{TXHLD}	TX Pair Positive Hold time at End of Packet	—	200	—	ns
T_{TXRET}	TX Pair Return to ≤ 50 mV after Last Positive Transition	—	210	—	ns

Table 24. 10BASE-T Receive Switching Characteristics

V_{DD} = 3.1 to 3.6 V, –40 to +85 °C unless otherwise specified.

Symbol	Description	Min	Typ	Max	UNITS
T_{RXJIT}	Allowable Received Jitter	—	—	±13.5	ns
T_{CSA}	Carrier Sense Assertion Delay	—	400	—	ns
T_{IPB}	Invalid Preamble Bits after Assertion of Carrier Sense	2	—	2	bits
T_{CSD}	Carrier Sense Deassertion Delay	—	200	—	ns

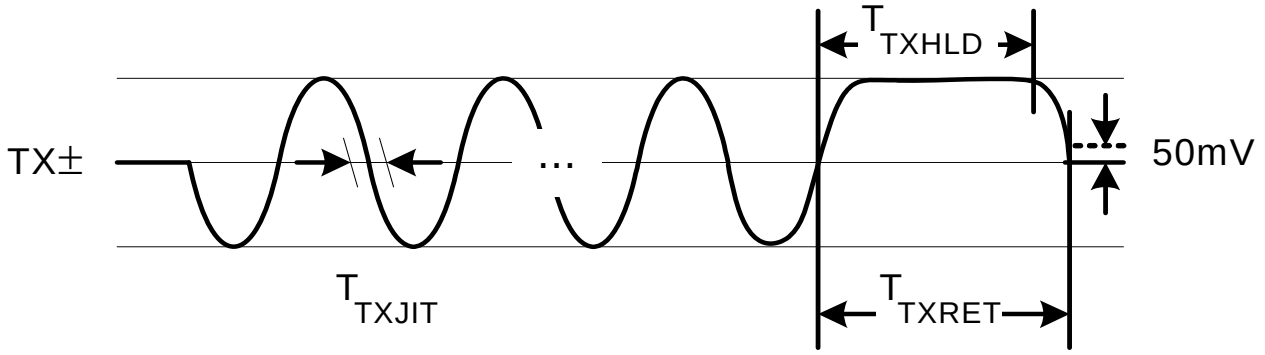

Figure 19. 10BASE-T Transmit

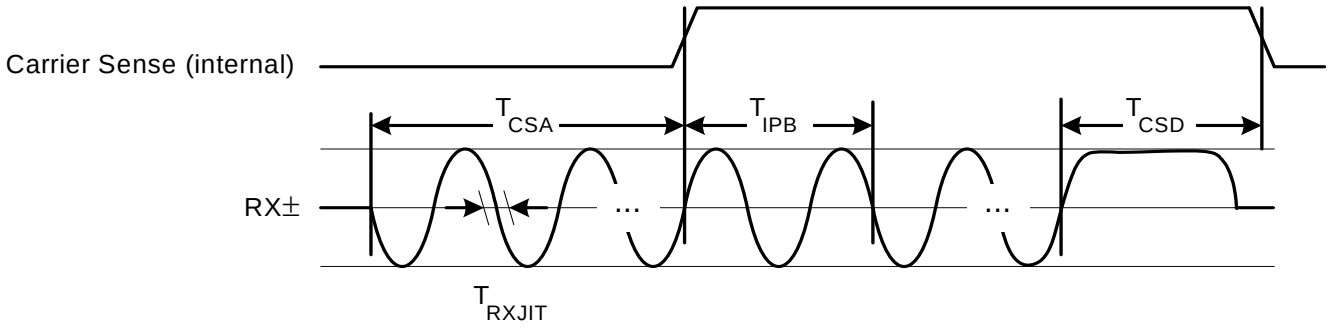

Figure 20. 10BASE-T Receive

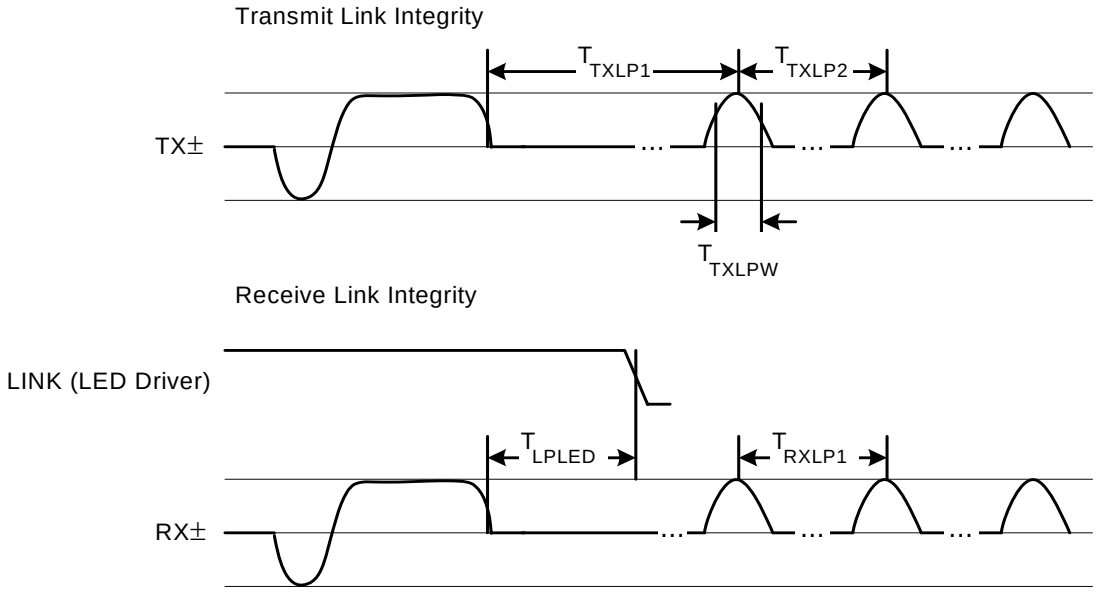

Figure 21. 10BASE-T Link Integrity

Table 25. 10BASE-T Link Integrity Switching Characteristics

V_{DD} = 3.1 to 3.6 V, –40 to +85 °C unless otherwise specified.

Symbol	Description	Min	Typ	Max	UNITS
T_{TXLP1}	First Transmitted Link Pulse after Last Transmitted Packet	—	16	—	ms
T_{TXLP2}	Time Between Transmitted Link Pulses	—	16	—	ms
T_{TXLPW}	Width of Transmitted Link Pulses	80	100	210	ns
T_{RXLP1}	Received Link Pulse Separation	8	—	24	ms
T_{LPLED}	Last Receive Activity to Link Fail	—	150	—	ms

16. Parallel Interface

The CP2200/1 has an 8-bit parallel host interface used to access the direct registers on the device. The parallel interface supports multiplexed or non-multiplexed operation using the Intel® or Motorola® bus format. The MUXEN pin can be driven high to place the device in multiplexed operation or driven low to select non-multiplexed operation. The MOTEN pin can be driven high to place the device in Motorola bus format or driven low to place the device in Intel bus format.

Notes:

1. The CP2201 (28-pin package) can only be used in multiplexed mode.
2. The PCB traces connecting $\overline{RD}$, $\overline{WR}$, $\overline{CS}$, ALE, and all address and data lines should be matched such that the propagation delay does not vary by more than **5 ns** between any two signals.

A parallel interface read or write operation typically requires 260 ns (non-multiplexed) or 300 ns (multiplexed) to transfer one byte of data. If back-to-back operations are scheduled on a non-multiplexed bus, data rates up to 30 Mbps can be achieved. Tables 26 through 29 provide detailed information about bus timing in each mode.

16.1. Non-Multiplexed Intel Format

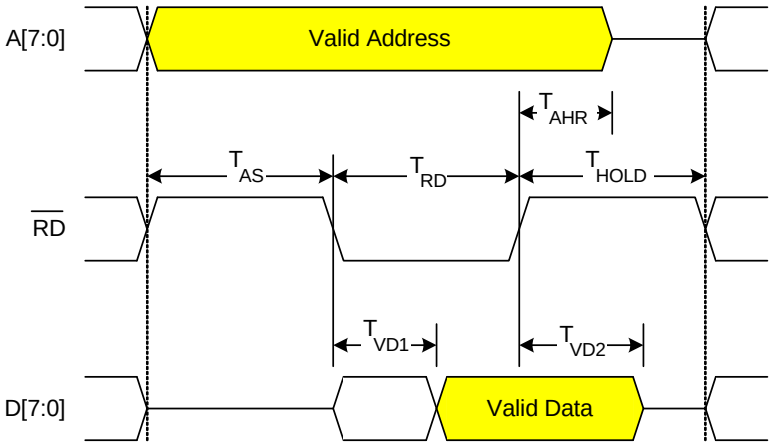

Notes:
1. $\overline{CS}$ must be asserted with or before $\overline{RD}$.
2. $\overline{WR}$ must remain de-asserted during a READ.

Figure 22. Nonmuxed Intel READ

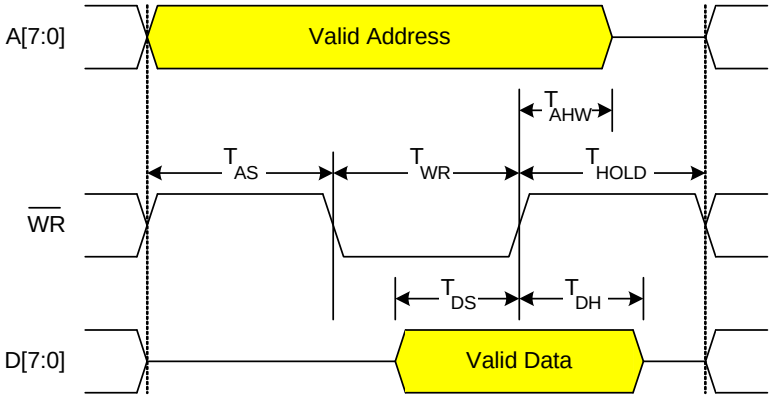

Notes:
1. $\overline{CS}$ must be asserted with or before $\overline{WR}$.
2. $\overline{RD}$ must remain de-asserted during a WRITE.

Figure 23. Nonmuxed Intel WRITE

Table 26. Non-Multiplexed Intel Mode AC Parameters

Symbol	Description	Min	Typ	Max	UNITS
T_{AS}	Address Setup Time (Read/Write)	30	—	—	ns
T_{RD}	RD Low Pulse Width (Read)	160	—	—	ns
T_{VD1}	RD Falling to Valid Data Out (Read)	—	—	140	ns
T_{VD2}	RD Rising to Data Bus Tri-State (Read)	—	60	—	ns
T_{WR}	WR Low Pulse Width (Write)	120	—	—	ns
T_{DS}	Data Setup Time (Write)	40	—	—	ns
T_{DH}	Data Hold Time (Write)	20	—	—	ns
T_{AHR}	Address Hold Time (Read)	30	—	—	ns
T_{AHW}	Address Hold Time (Write)	30	—	—	ns
T_{HOLD}	Hold Delay (Read/Write)	60	—	—	ns

16.2. Multiplexed Intel Format

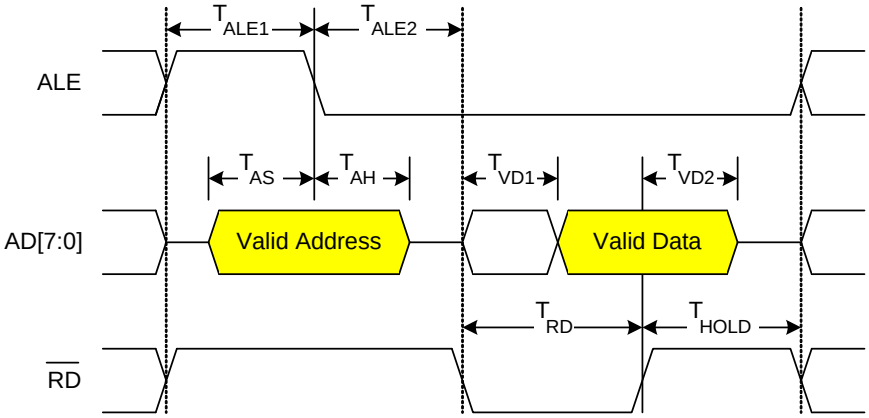

Notes:
1. CS must be asserted with or before RD.
2. WR must remain de-asserted during a READ.

Figure 24. Multiplexed Intel READ

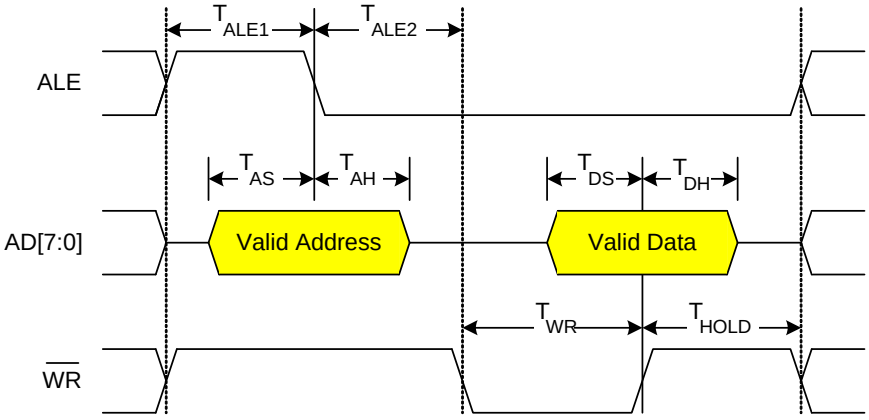

Notes:
1. CS must be asserted with or before WR
2. RD must remain de-asserted during a WRITE.

Figure 25. Multiplexed Intel WRITE

Table 27. Multiplexed Intel Mode AC Parameters

Parameter	Description	Min	Typ	Max	UNITS
T_{ALE1}	ALE High Pulse Width	40	—	—	ns
T_{ALE2}	ALE Falling to RD/WR Falling	40	—	—	ns
T_{AS}	Address Setup Time (Read/Write)	40	—	—	ns
T_{AH}	Address Hold Time (Read/Write)	40	—	—	ns
T_{RD}	RD Low Pulse Width	160	—	—	ns
T_{VD1}	RD Falling to Valid Data Out	—	—	140	ns
T_{VD2}	RD Rising to Data Bus Tri-State	—	60	—	ns
T_{WR}	WR Low Pulse Width	120	—	—	ns
T_{DS}	Data Setup Time (Write)	40	—	—	ns
T_{DH}	Data Hold Time (Write)	40	—	—	ns
T_{HOLD}	Hold Delay (Read/Write)	60	—	—	ns

16.3. Non-Multiplexed Motorola Format

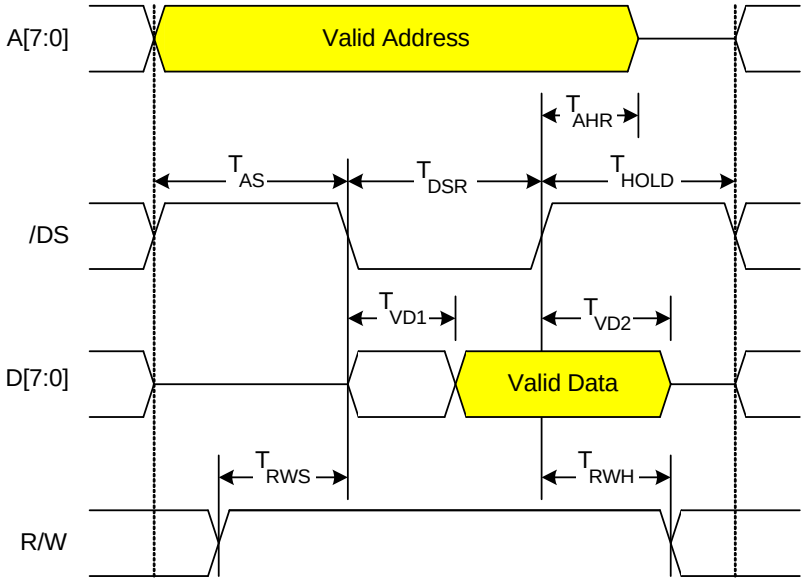

Note: /CS must be asserted with or before /DS.

Figure 26. Nonmuxed Motorola READ

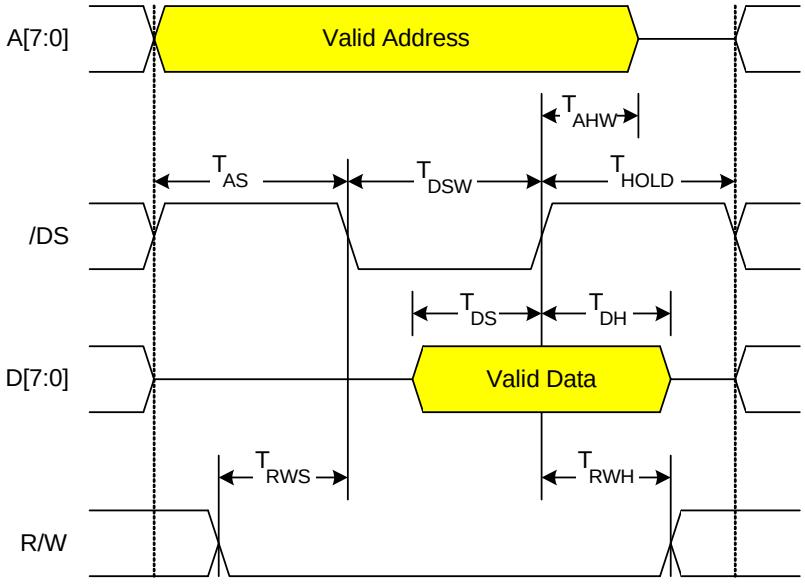

Note: /CS must be asserted with or before /DS.

Figure 27. Nonmuxed Motorola WRITE

Table 28. Non-Multiplexed Motorola Mode AC Parameters

Parameter	Description	Min	Typ	Max	UNITS
T_{AS}	Address Setup Time (Read/Write)	30	—	—	ns
T_{RWS}	R/W Setup Time (Read/Write)	30	—	—	ns
T_{DSR}	DS Low Pulse Width (Read)	160	—	—	ns
T_{VD1}	DS Falling to Valid Data Out (Read)	—	—	140	ns
T_{VD2}	DS Rising to Data Bus Tri-State (Read)	—	60	—	ns
T_{DSW}	DS Low Pulse Width (Write)	120	—	—	ns
T_{DS}	Data Setup Time (Write)	40	—	—	ns
T_{DH}	Data Hold Time (Write)	20	—	—	ns
T_{AHR}	Address Hold Time (Read)	30	—	—	ns
T_{AHW}	Address Hold Time (Write)	30	—	—	ns
T_{RWH}	R/W Hold Time (Read/Write)	20	—	—	ns
T_{HOLD}	Hold Delay (Read/Write)	60	—	—	ns

16.4. Multiplexed Motorola Format

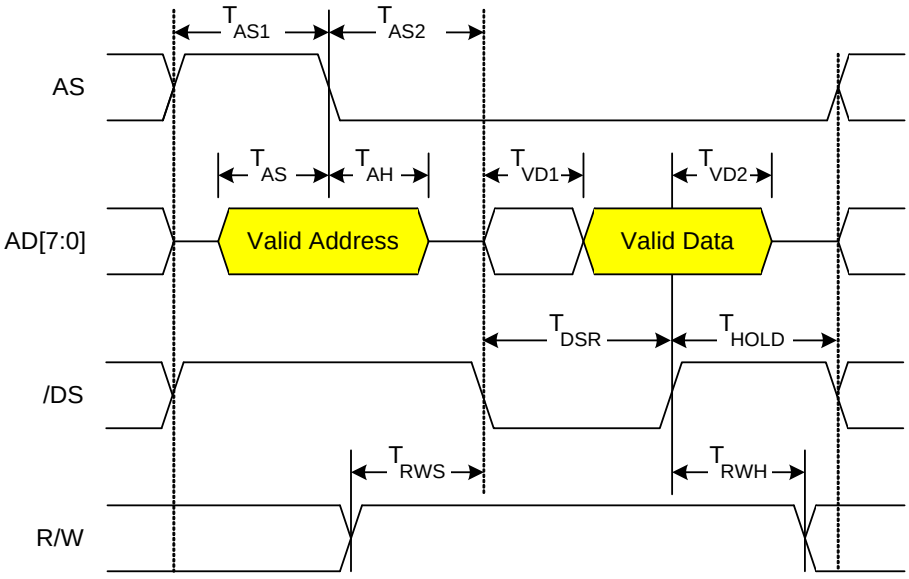

Note: /CS must be asserted with or before /DS.

Figure 28. Multiplexed Motorola READ

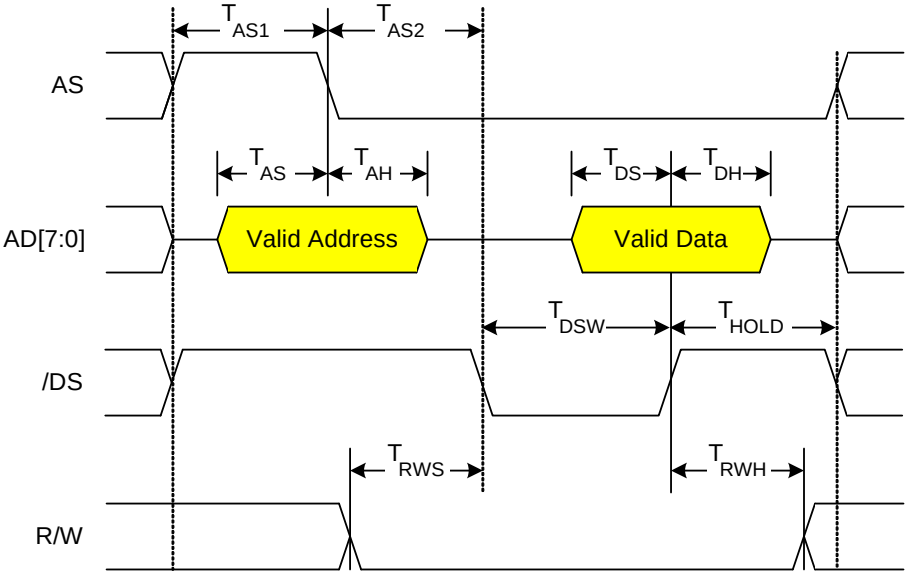

Note: /CS must be asserted with or before /DS.

Figure 29. Multiplexed Motorola WRITE

Table 29. Multiplexed Motorola Mode AC Parameters

Parameter	Description	Min	Typ	Max	UNITS
T_{AS1}	AS High Pulse Width (Read/Write)	40	—	—	ns
T_{AS2}	AS Falling to DS Falling (Read/Write)	40	—	—	ns
T_{AS}	Address Setup Time (Read/Write)	40	—	—	ns
T_{AH}	Address Hold Time (Read/Write)	40	—	—	ns
T_{RWS}	R/W Setup Time (Read/Write)	40	—	—	ns
T_{DSR}	DS Low Pulse Width (Read)	160	—	—	ns
T_{VD1}	DS Falling to Valid Data Out (Read)	—	—	140	ns
T_{VD2}	DS Rising to Data Bus Tri-State (Read)	—	60	—	ns
T_{DSR}	DS Low Pulse Width (Write)	120	—	—	ns
T_{DS}	Data Setup Time (Write)	40	—	—	ns
T_{DH}	Data Hold Time (Write)	60	—	—	ns
T_{RWH}	R/W Hold Time (Read/Write)	60	—	—	ns
T_{HOLD}	Hold Delay (Read/Write)	60	—	—	ns

17. Revision-Specific Behavior

This chapter contains behavioral differences between CP220x "REV C" and behavior as stated in the data sheet.

17.1. Revision Identification

The Lot ID Code on the top side of the device package can be used for decoding device revision information. On CP220x devices, the revision letter is the first letter of the Lot ID Code.

Figures 30 and 31 show how to find the Lot ID Code on the top side of the device package.

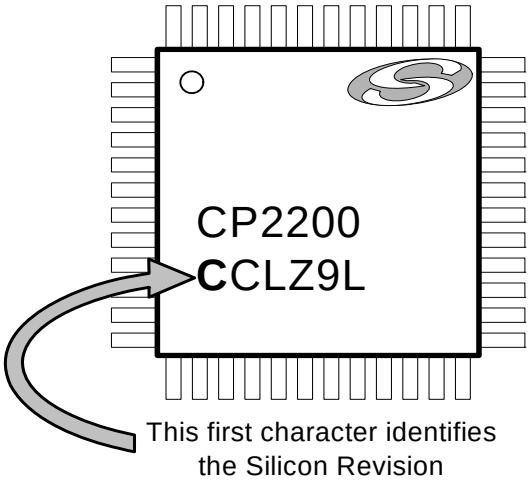

Figure 30. Device Package—TQFP 48

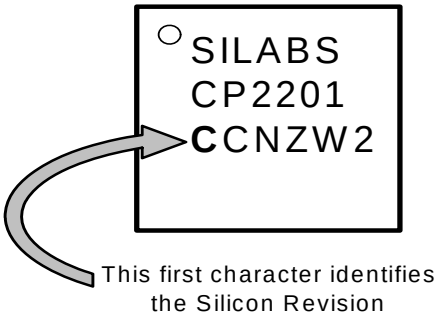

Figure 31. Device Package—QFN 28

17.2. MAC Address Filtering

Problem

For unicast packets received over the Ethernet wire, the receive filter only validates the first 5 bytes of the 6-byte Ethernet MAC Address. Any packet addressed to a device whose MAC address only differs in the 6th byte will be allowed to pass through the receive filter.

Workaround

The Ethernet driver on the host controller should verify that the 6th byte of each packet (i.e., the final byte of the MAC address) matches its assigned MAC address. If it detects a mismatch, the packet should be discarded by writing 1 to the RXSKIP bit.

Implications on Throughput

This behavior does not slow down the rate which the embedded system can send or receive packets, since the CP220x must receive and filter all packets on the network. However, it can interrupt the host controller for received packets addressed to another device with a similar MAC address (where the only difference is in the 6th byte) on the same subnet. On a managed switch network, present on most corporate LANs, the effect of this behavior is minimal due to the fact that the managed switch filters out unicast packets not addressed to the receiving Ethernet device.

Document Change List

Revision 0.4 to Revision 0.41

- Modified Figure 2, “Typical Connection Diagram (Non-Multiplexed),” on page 6 and Figure 3, “Typical Connection Diagram (Multiplexed),” on page 7 for improved EMI emmissions and common mode stability.

Revision 0.41 to Revision 1.0

- Added Maximum Supply Current specification in Table 2 on page 9.
- Updated the maximum XTAL1 Input Low Voltage specification from 0.8 to 0.7 V (see Table 8 on page 20).
- Updated the maximum $\overline{\text{RST}}$ Input Pullup Current specification from 40 to 50 µA (see Table 13 on page 42).
- Updated the Non-Multiplexed EMIF address hold time from 20 to 30 ns and the T_{vd2} specification from 40 to 60 ns. Note that the T_{hold} specification is unchanged from its value of 60 ns; therefore, changes to host timing will not be required in most applications. See Section 16 on page 96.
- Added a Revision-Specific Behavior chapter. See Section 17 on page 104.
- Removed text indicating that all packets on the wire can be received and buffered by the CP220x.

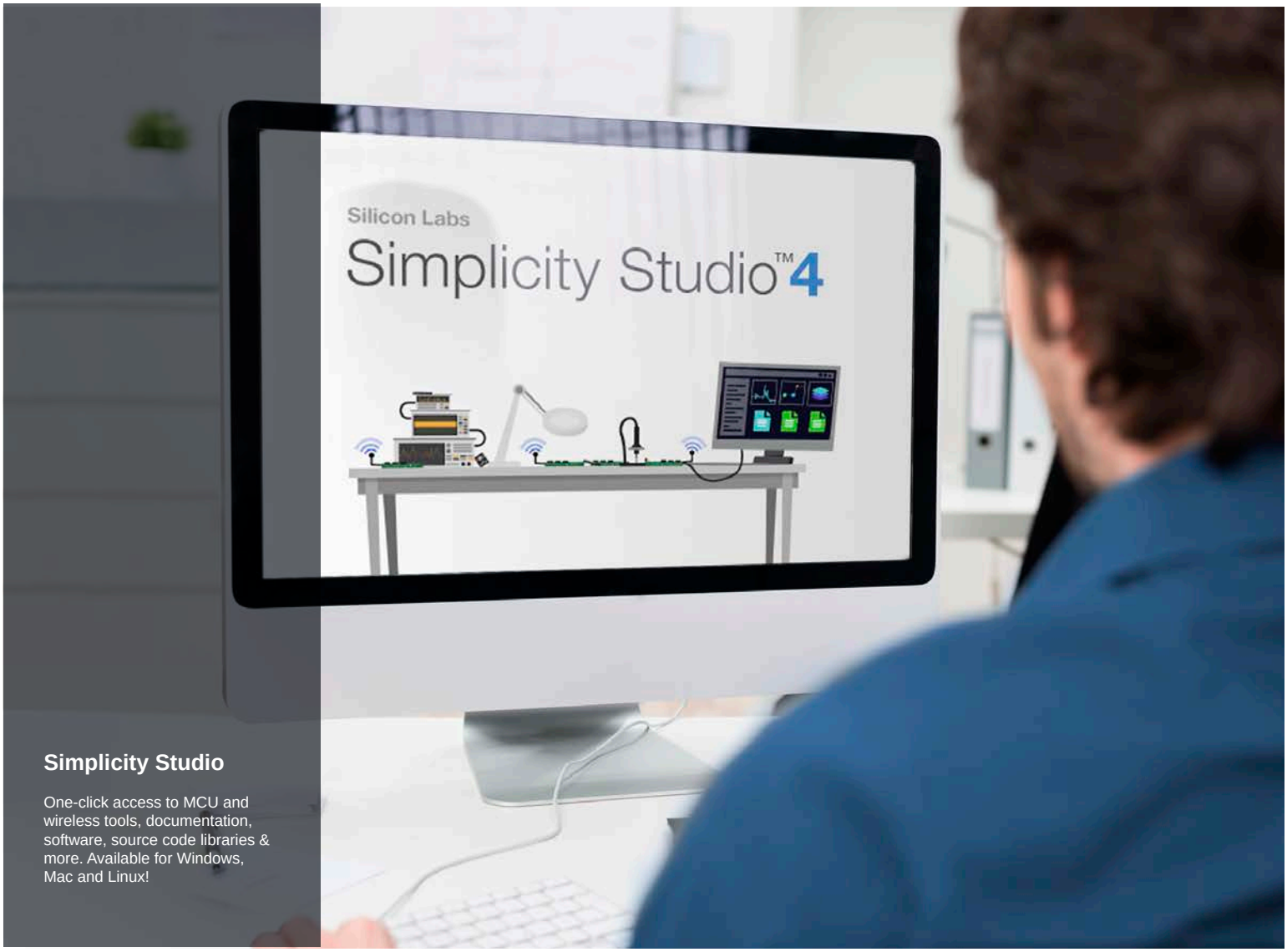

Simplicity Studio

One-click access to MCU and wireless tools, documentation, software, source code libraries & more. Available for Windows, Mac and Linux!

IoT Portfolio
www.silabs.com/IoT

SW/HW
www.silabs.com/simplicity

Quality
www.silabs.com/quality

Support and Community
community.silabs.com

Disclaimer
Silicon Labs intends to provide customers with the latest, accurate, and in-depth documentation of all peripherals and modules available for system and software implementers using or intending to use the Silicon Labs products. Characterization data, available modules and peripherals, memory sizes and memory addresses refer to each specific device, and "Typical" parameters provided can and do vary in different applications. Application examples described herein are for illustrative purposes only. Silicon Labs reserves the right to make changes without further notice and limitation to product information, specifications, and descriptions herein, and does not give warranties as to the accuracy or completeness of the included information. Silicon Labs shall have no liability for the consequences of use of the information supplied herein. This document does not imply or express copyright licenses granted hereunder to design or fabricate any integrated circuits. The products are not designed or authorized to be used within any Life Support System without the specific written consent of Silicon Labs. A "Life Support System" is any product or system intended to support or sustain life and/or health, which, if it fails, can be reasonably expected to result in significant personal injury or death. Silicon Labs products are not designed or authorized for military applications. Silicon Labs products shall under no circumstances be used in weapons of mass destruction including (but not limited to) nuclear, biological or chemical weapons, or missiles capable of delivering such weapons.

Trademark Information
Silicon Laboratories Inc.® , Silicon Laboratories®, Silicon Labs®, SiLabs® and the Silicon Labs logo®, Bluegiga®, Bluegiga Logo®, Clockbuilder®, CMEMS®, DSPLL®, EFM®, EFM32®, EFR, Ember®, Energy Micro, Energy Micro logo and combinations thereof, "the world's most energy friendly microcontrollers", Ember®, EZLink®, EZRadio®, EZRadioPRO®, Gecko®, ISOmodem®, Precision32®, ProSLIC®, Simplicity Studio®, SiPHY®, Telegesis, the Telegesis Logo®, USBXpress® and others are trademarks or registered trademarks of Silicon Labs. ARM, CORTEX, Cortex-M3 and THUMB are trademarks or registered trademarks of ARM Holdings. Keil is a registered trademark of ARM Limited. All other products or brand names mentioned herein are trademarks of their respective holders.

SILICON LABS

Silicon Laboratories Inc.
400 West Cesar Chavez
Austin, TX 78701
USA

http://www.silabs.com