Si5338

I²C-Programmable Any-Frequency, Any-Output Quad Clock Generator

Features

- Low power MultiSynth™ technology enables independent, any-frequency synthesis on four differential output drivers
- PCIe Gen 1/2/3/4 Common Clock and Gen 3 SRNS compliant
- Highly-configurable output drivers with up to four differential outputs, eight single-ended clock outputs, or a combination of both
- Low phase jitter of 0.7 ps RMS typ
- High precision synthesis allows true zero ppm frequency accuracy on all outputs
- Flexible input reference:
  - External crystal: 8 to 30 MHz
  - CMOS input: 5 to 200 MHz
  - SSTL/HSTL input: 5 to 350 MHz
  - Differential input: 5 to 710 MHz
- Independently configurable outputs support any frequency or format:
  - LVPECL/LVDS: 0.16 to 710 MHz
  - HCSL: 0.16 to 250 MHz
  - CMOS: 0.16 to 200 MHz
  - SSTL/HSTL: 0.16 to 350 MHz
- Independent output voltage per driver: 1.5, 1.8, 2.5, or 3.3 V
- Single supply core with excellent PSRR: 1.8, 2.5, 3.3 V
- Independent frequency increment/decrement feature enables glitchless frequency adjustments in 1 ppm steps
- Independent phase adjustment on each of the output drivers with an accuracy of ≤20 ps steps
- Highly configurable spread spectrum (SSC) on any output:
  - Any frequency from 5 to 350 MHz
  - Any spread from 0.5 to 5.0%
  - Any modulation rate from 33 to 63 kHz
- External feedback mode allows zero-delay mode
- Loss of lock and loss of signal alarms
- I²C/SMBus compatible interface
- Easy to use programming software
- Small size: 4 x 4 mm, 24-QFN
- Low power: 45 mA core supply typ
- Wide temperature range: –40 to +85 °C

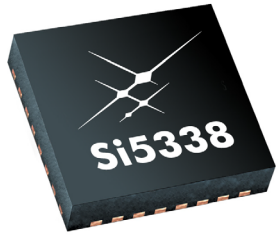

Ordering Information:
See page 42.

Pin Assignments

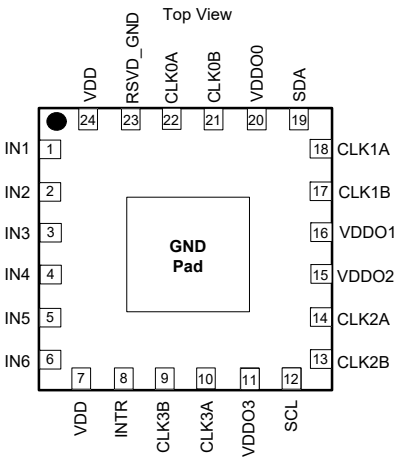

Applications

- Ethernet switch/router
- PCIe Gen1/2/3/4
- Broadcast video/audio timing
- Processor and FPGA clocking
- Any-frequency clock conversion
- MSAN/DSLAM/PON
- Fibre Channel, SAN
- Telecom line cards
- 1 GbE and 10 GbE

Description

The Si5338 is a high-performance, low-jitter clock generator capable of synthesizing any frequency on each of the device's four output drivers. This timing IC is capable of replacing up to four different frequency crystal oscillators or operating as a frequency translator. Using its patented MultiSynth™ technology, the Si5338 allows generation of four independent clocks with 0 ppm precision. Each output clock is independently configurable to support various signal formats and supply voltages. The Si5338 provides low-jitter frequency synthesis in a space-saving 4 x 4 mm QFN package. The device is programmable via an I²C/SMBus-compatible serial interface and supports operation from a 1.8, 2.5, or 3.3 V core supply.

I²C device programming is made easy with ClockBuilder Pro, available at https://www.skyworksinc.com/en/Application-Pages/Clockbuilder-Pro-Software.

Measuring PCIe clock jitter is quick and easy with the Skyworks Solutions PCIe Clock Jitter Tool. Download it for free at https://www.skyworksinc.com/en/application-pages/pci-express-learning-center.

Functional Block Diagram

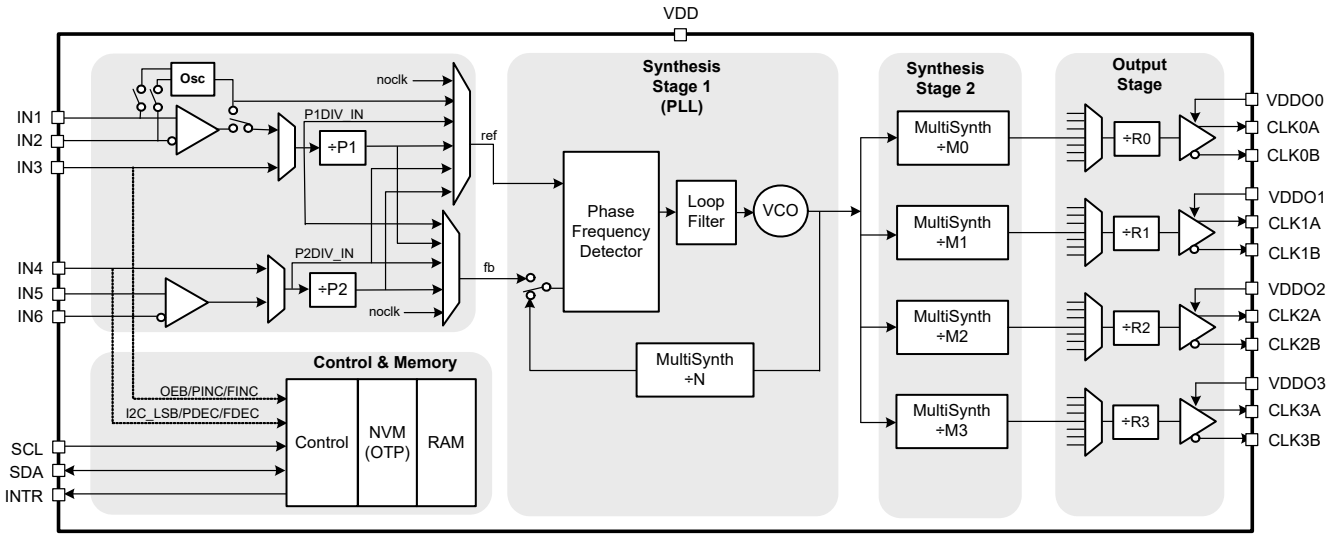

TABLE OF CONTENTS

Section	Page
1. Electrical Specifications	**4**
2. Typical Application Circuits	**17**
3. Functional Description	**18**
3.1. Overview	18
3.2. Input Stage	19
3.3. Synthesis Stages	19
3.4. Output Stage	21
3.5. Configuring the Si5338	21
3.6. Status Indicators	24
3.7. Output Enable	24
3.8. Power Consumption	25
3.9. Reset Options	27
3.10. Features of the Si5338	27
4. Applications of the Si5338	**29**
4.1. Free-Running Clock Generator	29
4.2. Synchronous Frequency Translation	30
4.3. Configurable Buffer and Level Translator	30
5. I^2C Interface	**31**
6. Si5338 Registers	**32**
7. Pin Descriptions	**33**
8. Device Pinout by Part Number	**37**
9. Package Outline: 24-Lead QFN	**39**
10. Recommended PCB Land Pattern	**40**
11. Top Marking	**41**
11.1. Si5338 Top Marking	41
11.2. Top Marking Explanation	41
12. Ordering Information	**42**
13. Device Errata	**43**
Document Change List	**44**

1. Electrical Specifications

Table 1. Recommended Operating Conditions

(V_{DD} = 1.8 V –5% to +10%, 2.5 V ±10%, or 3.3 V ±10%, T_A = –40 to 85 °C)

Parameter	Symbol	Test Condition	Min	Typ	Max	Unit
Ambient Temperature	T_A		–40	25	85	°C
Core Supply Voltage	V_{DD}		2.97	3.3	3.63	V
			2.25	2.5	2.75	V
			1.71	1.8	1.98	V
Output Buffer Supply Voltage	V_{DDOn}		1.4	—	3.63	V

Note: All minimum and maximum specifications are guaranteed and apply across the recommended operating conditions. Typical values apply at nominal supply voltages and an operating temperature of 25 °C unless otherwise noted.

Table 2. Absolute Maximum Ratings[1]

Parameter	Symbol	Test Condition	Value	Unit
DC Supply Voltage	V_{DD}		–0.5 to 3.8	V
Storage Temperature Range	T_{STG}		–55 to 150	°C
ESD Tolerance		HBM (100 pF, 1.5 kΩ)	2.5	kV
ESD Tolerance		CDM	550	V
ESD Tolerance		MM	175	V
Latch-up Tolerance			JESD78 Compliant	
Junction Temperature	T_J		150	°C
Peak Soldering Reflow Temperature[2]			260	°C

Notes:
1. Permanent device damage may occur if the absolute maximum ratings are exceeded. Functional operation should be restricted to the conditions as specified in the operational sections of this data sheet. Exposure to absolute maximum rating conditions for extended periods may affect device reliability.
2. Refer to JEDEC J-STD-020 standard for more information.

Table 3. DC Characteristics

(V_{DD} = 1.8 V –5% to +10%, 2.5 V ±10%, or 3.3 V ±10%, T_A = –40 to 85 °C)

Parameter	Symbol	Test Condition	Min	Typ	Max	Unit
Core Supply Current	I_{DD}	100 MHz on all outputs, 25 MHz refclk	—	45	60	mA
Core Supply Current (Buffer Mode)	I_{DDB}	50 MHz refclk	—	12	—	mA
Output Buffer Supply Current	I_{DDOx}	LVPECL, 710 MHz	—	—	30	mA
		LVDS, 710 MHz	—	—	8	mA
		HCSL, 250 MHz 2 pF load	—	—	20	mA
		CML, 350 MHz	—	12	—	mA
		SSTL, 350 MHz	—	—	19	mA
		CMOS, 50 MHz 15 pF load[1]	—	6	9	mA
		CMOS, 200 MHz[1,2] 3.3 V VDD0	—	13	18	mA
		CMOS, 200 MHz[1,2] 2.5 V	—	10	14	mA
		CMOS, 200 MHz[1,2] 1.8 V	—	7	10	mA
		HSTL, 350 MHz	—	—	19	mA

Notes:
1. Single CMOS driver active.
2. Measured into a 5” 50 Ω trace with 2 pF load.

Table 4. Thermal Characteristics

Parameter	Symbol	Test Condition	Value	Unit
Thermal Resistance Junction to Ambient	θ_{JA}	Still Air	37	°C/W
Thermal Resistance Junction to Case	θ_{JC}	Still Air	10	°C/W

Table 5. Performance Characteristics

(V_{DD} = 1.8 V –5% to +10%, 2.5 V ±10%, or 3.3 V ±10%, T_A = –40 to 85 °C)

Parameter	Symbol	Test Condition	Min	Typ	Max	Unit
PLL Acquisition Time	t_{ACQ}		—	—	25	ms
PLL Tracking Range	f_{TRACK}		5000	20000	—	ppm
PLL Loop Bandwidth	f_{BW}		—	1.6	—	MHz
MultiSynth Frequency Synthesis Resolution	f_{RES}	Output frequency ≤ Fvco/8	0	0	1	ppb
CLKIN Loss of Signal Detect Time	t_{LOS}		—	2.6	5	µs
CLKIN Loss of Signal Release Time	t_{LOSRLS}		0.01	0.2	1	µs
PLL Loss of Lock Detect Time	t_{LOL}		—	5	10	ms
POR to Output Clock Valid (Pre-programmed Devices)	t_{RDY}		—	—	2	ms
Input-to-Output Propagation Delay	t_{PROP}	Buffer Mode (PLL Bypass)	—	2.5	4	ns
Output-Output Skew	t_{DSKEW}	Rn divider = 1[1]	—	—	100	ps
POR to I^2C Ready			—	—	15	ms
Programmable Initial Phase Offset	P_{OFFSET}		–45	—	+45	ns
Phase Increment/Decrement Accuracy	P_{STEP}		—	—	20	ps
Phase Increment/Decrement Range	P_{RANGE}		–45	—	+45	ns
MultiSynth range for phase increment/decrement	f_{PRANGE}		5	—	Fvco/8[2]	MHz
Phase Increment/Decrement Update Time	P_{UPDATE}	Pin control[2,3] MultiSynth output >18 MHz	667	—	—	ns

Notes:

1. Outputs at integer-related frequencies and using the same driver format. See "3.10.3. Programmable Initial Phase Offset" on page 27.
2. The maximum step size is only limited by the register lengths; however, the MultiSynth output frequency must be kept between 5 MHz and Fvco/8.
3. Update rate via I^2C is also limited by the time it takes to perform a write operation.
4. Default value is 0.5% down spread.
5. Default value is ~31.5 kHz.

Table 5. Performance Characteristics (Continued)
(V_{DD} = 1.8 V –5% to +10%, 2.5 V ±10%, or 3.3 V ±10%, T_A = –40 to 85 °C)

Parameter	Symbol	Test Condition	Min	Typ	Max	Unit
Phase Increment/Decrement Update Time	P_{UPDATE}	Pin control[2,3] MultiSynth output <18 MHz Number of periods of MultiSynth output frequency	—	10	12	Periods
Frequency Increment/Decrement Step Size	f_{STEP}	R divider not used	1	—	See Note 2	ppm
MultiSynth range for frequency increment/decrement	f_{RANGE}	R divider not used	5	—	Fvco/8	MHz
Frequency Increment/Decrement Update Time	f_{UPDATE}	Pin control[2,3] MultiSynth output >18 MHz	—	—	667	ns
Frequency Increment/Decrement Update Time	f_{UPDATE}	Pin control[2,3] MultiSynth output <18 MHz Number of periods of MultiSynth output frequency	—	10	12	Periods
Spread Spectrum PP Frequency Deviation	SS_{DEV}	MultiSynth Output ≤ ~Fvco/8	0.1	—	5.0[4]	%
Spread Spectrum Modulation Rate	SS_{DEV}	MultiSynth Output ≤ ~Fvco/8	30	—	63[5]	kHz

Notes:
1. Outputs at integer-related frequencies and using the same driver format. See "3.10.3. Programmable Initial Phase Offset" on page 27.
2. The maximum step size is only limited by the register lengths; however, the MultiSynth output frequency must be kept between 5 MHz and Fvco/8.
3. Update rate via I^2C is also limited by the time it takes to perform a write operation.
4. Default value is 0.5% down spread.
5. Default value is ~31.5 kHz.

Table 6. Input and Output Clock Characteristics

(V_{DD} = 1.8 V –5% to +10%, 2.5 V ±10%, or 3.3 V ±10%, T_A = –40 to 85 °C)

Parameter	Symbol	Test Condition	Min	Typ	Max	Unit
Input Clock (AC Coupled Differential Input Clocks on Pins IN1/2, IN5/6)[1]						
Frequency	f_{IN}		5	—	710	MHz
Differential Voltage Swing	V_{PP}	710 MHz input	0.4	—	2.4	V_{PP}
Rise/Fall Time[2]	t_R/t_F	20%–80%	—	—	1.0	ns
Duty Cycle	DC	< 1 ns tr/tf	40	—	60	%
Duty Cycle	DC (PLL bypass)[3]	< 1 ns tr/tf	45	—	55	%
Input Impedance[1]	R_{IN}		10	—	—	kΩ
Input Capacitance	C_{IN}		—	3.5	—	pF
Input Clock (DC-Coupled Single-Ended Input Clock on Pins IN3/4)						
Frequency	f_{IN}	CMOS	5	—	200	MHz
Input Voltage	V_I		–0.1	—	3.73	V
Input Voltage Swing		200 MHz	0.8	—	VDD+10%	Vpp
Rise/Fall Time[4]	t_R/t_F	10%–90%	—	—	4	ns
Rise/Fall Time[4]	t_R/t_F	20%–80%	—	—	2.3	ns
Duty Cycle[5]	DC	< 4 ns tr/tf	40	—	60	%
Input Capacitance	C_{IN}		—	2.0	—	pF
Output Clocks (Differential)						
Frequency[6]	f_{OUT}	LVPECL, LVDS, CML	0.16	—	350	MHz
			367	—	473.33	MHz
			550	—	710	MHz
		HCSL	0.16	—	250	MHz

Notes:

1. Use an external 100 Ω resistor to provide load termination for a differential clock. See Figure 3.
2. For best jitter performance, keep the midpoint differential input slew rate on pins 1,2,5,6 faster than 0.3 V/ns.
3. Minimum input frequency in clock buffer mode (PLL bypass) is 5 MHz. Operation to 1 MHz is also supported in buffer mode, but loss-of-signal (LOS) status is not functional.
4. For best jitter performance, keep the mid point input single ended slew rate on pins 3 or 4 faster than 1 V/ns.
5. Not in PLL bypass mode.
6. Only two unique frequencies above 350 MHz can be simultaneously output, Fvco/4 and Fvco/6. See "3.3. Synthesis Stages" on page 19.
7. CML output format requires ac-coupling of the differential outputs to a differential 100 Ω load at the receiver.
8. Includes effect of internal series 22 Ω resistor.

Table 6. Input and Output Clock Characteristics (Continued)
(V_{DD} = 1.8 V –5% to +10%, 2.5 V ±10%, or 3.3 V ±10%, T_A = –40 to 85 °C)

Parameter	Symbol	Test Condition	Min	Typ	Max	Unit
LVPECL Output Voltage	V_{OC}	common mode	—	V_{DDO}– 1.45 V	—	V
	V_{SEPP}	peak-to-peak single-ended swing	0.55	0.8	0.96	V_{PP}
LVDS Output Voltage (2.5/3.3 V)	V_{OC}	common mode	1.125	1.2	1.275	V
	V_{SEPP}	Peak-to-Peak Single-Ended Swing	0.25	0.35	0.45	V_{PP}
LVDS Output Voltage (1.8 V)	V_{OC}	Common Mode	0.8	0.875	0.95	V
	V_{SEPP}	Peak-to-Peak Single-Ended Swing	0.25	0.35	0.45	V_{PP}
HCSL Output Voltage	V_{OC}	Common Mode	0.35	0.375	0.400	V
	V_{SEPP}	Peak-to-Peak Single-Ended Swing	0.575	0.725	0.85	V_{PP}
CML Output Voltage	V_{OC}	Common Mode	—	See Note [7]	—	V
	V_{SEPP}	Peak-to-Peak Single-Ended Swing	0.67	0.860	1.07	V_{PP}
Rise/Fall Time	t_R/t_F	20%–80%	—	—	450	ps
Duty Cycle[5]	DC		45	—	55	%
Output Clocks (Single-Ended)						
Frequency	f_{OUT}	CMOS	0.16	—	200	MHz
		SSTL, HSTL	0.16	—	350	MHz
CMOS 20%–80% Rise/Fall Time	t_R/t_F	2 pF load	—	0.45	0.85	ns
CMOS 20%–80% Rise/Fall Time	t_R/t_F	15 pF load	—	—	2.0	ns

Notes:
1. Use an external 100 Ω resistor to provide load termination for a differential clock. See Figure 3.
2. For best jitter performance, keep the midpoint differential input slew rate on pins 1,2,5,6 faster than 0.3 V/ns.
3. Minimum input frequency in clock buffer mode (PLL bypass) is 5 MHz. Operation to 1 MHz is also supported in buffer mode, but loss-of-signal (LOS) status is not functional.
4. For best jitter performance, keep the mid point input single ended slew rate on pins 3 or 4 faster than 1 V/ns.
5. Not in PLL bypass mode.
6. Only two unique frequencies above 350 MHz can be simultaneously output, Fvco/4 and Fvco/6. See "3.3. Synthesis Stages" on page 19.
7. CML output format requires ac-coupling of the differential outputs to a differential 100 Ω load at the receiver.
8. Includes effect of internal series 22 Ω resistor.

Table 6. Input and Output Clock Characteristics (Continued)
(V_{DD} = 1.8 V –5% to +10%, 2.5 V ±10%, or 3.3 V ±10%, T_A = –40 to 85 °C)

Parameter	Symbol	Test Condition	Min	Typ	Max	Unit
CMOS Output Resistance			—	50	—	Ω
SSTL Output Resistance			—	50	—	Ω
HSTL Output Resistance			—	50	—	Ω
CMOS Output Voltage[8]	V_{OH}	4 mA load	VDDO – 0.3	—		V
	V_{OL}	4 mA load		—	0.3	V
SSTL Output Voltage	V_{OH}	SSTL-3 VDDOx = 2.97 to 3.63 V	0.45xVDDO+0.41	—	—	V
	V_{OL}		—	—	0.45xVDDO –0.41	V
	V_{OH}	SSTL-2 VDDOx = 2.25 to 2.75 V	0.5xVDDO+0.41	—	—	V
	V_{OL}		—	—	0.5xVDDO–0.41	V
	V_{OH}	SSTL-18 VDDOx = 1.71 to 1.98 V	0.5xVDDO+0.34	—		V
	V_{OL}		—	—	0.5xVDDO–0.34	V
HSTL Output Voltage	V_{OH}	VDDO = 1.4 to 1.6 V	0.5xVDDO+0.3	—	—	V
	V_{OL}		—	—	0.5xVDDO – 0.3	V
Duty Cycle[5]	DC		45	—	55	%

Notes:
1. Use an external 100 Ω resistor to provide load termination for a differential clock. See Figure 3.
2. For best jitter performance, keep the midpoint differential input slew rate on pins 1,2,5,6 faster than 0.3 V/ns.
3. Minimum input frequency in clock buffer mode (PLL bypass) is 5 MHz. Operation to 1 MHz is also supported in buffer mode, but loss-of-signal (LOS) status is not functional.
4. For best jitter performance, keep the mid point input single ended slew rate on pins 3 or 4 faster than 1 V/ns.
5. Not in PLL bypass mode.
6. Only two unique frequencies above 350 MHz can be simultaneously output, Fvco/4 and Fvco/6. See "3.3. Synthesis Stages" on page 19.
7. CML output format requires ac-coupling of the differential outputs to a differential 100 Ω load at the receiver.
8. Includes effect of internal series 22 Ω resistor.

Table 7. Control Pins

(V_{DD} = 1.8 V –5% to +10%, 2.5 V ±10%, or 3.3 V ±10%, T_A = –40 to 85 °C)

Parameter	Symbol	Condition	Min	Typ	Max	Unit
Input Control Pins (IN3, IN4)						
Input Voltage Low	V_{IL}		–0.1	—	0.3 x V_{DD}	V
Input Voltage High	V_{IH}		0.7 x V_{DD}	—	3.73	V
Input Capacitance	C_{IN}		—	—	4	pF
Input Resistance	R_{IN}		—	20	—	kΩ
Output Control Pins (INTR)						
Output Voltage Low	V_{OL}	I_{SINK} = 3 mA	0	—	0.4	V
Rise/Fall Time 20–80%	t_R/t_F	C_L < 10 pf, pull up = 1 kΩ	—	—	10	ns

Table 8. Crystal Specifications for 8 to 11 MHz

Parameter	Symbol	Min	Typ	Max	Unit
Crystal Frequency	f_{XTAL}	8	—	11	MHz
Load Capacitance (on-chip differential)	c_L (supported)*	11	12	13	pF
	c_L (recommended)	17	18	19	pF
Crystal Output Capacitance	c_O	—	—	6	pF
Equivalent Series Resistance	r_{ESR}	—	—	300	Ω
Crystal Max Drive Level	d_L	100	—	—	µW

***Note:** See "AN360: Crystal Selection Guide for Si533x and Si5355/56 Devices" for how to adjust the registers to accommodate a 12 pF crystal C_L.

Table 9. Crystal Specifications for 11 to 19 MHz

Parameter	Symbol	Min	Typ	Max	Unit
Crystal Frequency	f_{XTAL}	11	—	19	MHz
Load Capacitance (on-chip differential)	c_L (supported)*	11	12	13	pF
	c_L (recommended)	17	18	19	pF
Crystal Output Capacitance	c_O	—	—	5	pF
Equivalent Series Resistance	r_{ESR}	—	—	200	Ω
Crystal Max Drive Level	d_L	100	—	—	µW

***Note:** See "AN360: Crystal Selection Guide for Si533x and Si5355/56 Devices" for how to adjust the registers to accommodate a 12 pF crystal C_L.

Table 10. Crystal Specifications for 19 to 26 MHz

Parameter	Symbol	Min	Typ	Max	Unit
Crystal Frequency	f_{XTAL}	19		26	MHz
Load Capacitance (on-chip differential)	c_L (supported)*	11	12	13	pF
	c_L (recommended)	17	18	19	pF
Crystal Output Capacitance	c_O			5	pF
Equivalent Series Resistance	r_{ESR}			100	Ω
Crystal Max Drive Level	d_L	100			µW

***Note:** See "AN360: Crystal Selection Guide for Si533x and Si5355/56 Devices" for how to adjust the registers to accommodate a 12 pF crystal C_L.

Table 11. Crystal Specifications for 26 to 30 MHz

Parameter	Symbol	Min	Typ	Max	Unit
Crystal Frequency	f_{XTAL}	26		30	MHz
Load Capacitance (on-chip differential)	c_L (supported)*	11	12	13	pF
	c_L (recommended)	17	18	19	pF
Crystal Output Capacitance	c_O			5	pF
Equivalent Series Resistance	r_{ESR}			75	Ω
Crystal Max Drive Level	d_L	100			µW

***Note:** See "AN360: Crystal Selection Guide for Si533x and Si5355/56 Devices" for how to adjust the registers to accommodate a 12 pF crystal C_L.

Table 12. Jitter Specifications[1,2,3]

(V_{DD} = 1.8 V –5% to +10%, 2.5 V ±10%, or 3.3 V ±10%, T_A = –40 to 85 °C)

Parameter	Symbol	Test Condition	Min	Typ	Max	Unit
GbE Random Jitter (12 kHz–20 MHz)[4]	J_{GbE}	CLKIN = 25 MHz All CLKn at 125 MHz[5]	—	0.7	1	ps RMS
GbE Random Jitter (1.875–20 MHz)	R_{JGbE}	CLKIN = 25 MHz All CLKn at 125 MHz[5]	—	0.38	0.79	ps RMS
OC-12 Random Jitter (12 kHz–5 MHz)	J_{OC12}	CLKIN = 19.44 MHz All CLKn at 155.52 MHz[5]	—	0.7	1	ps RMS
PCI Express 1.1 Common Clocked		Total Jitter[6]	—	20.1	33.6	ps pk-pk
PCI Express 2.1 Common Clocked		RMS Jitter[6], 10 kHz to 1.5 MHz	—	0.15	1.47	ps RMS
		RMS Jitter[6], 1.5 MHz to 50 MHz	—	0.58	0.75	ps RMS
PCI Express 3.0 Common Clocked		RMS Jitter[6]	—	0.15	0.45	ps RMS
PCIe Gen 3 Separate Reference No Spread, SRNS		PLL BW of 2–4 or 2–5 MHz, CDR = 10 MHz	—	0.11	0.32	ps RMS
PCIe Gen 4, Common Clock		PLL BW of 2–4 or 2–5 MHz, CDR = 10 MHz	—	0.15	0.45	ps RMS
Period Jitter	J_{PER}	N = 10,000 cycles[7]	—	10	30	ps pk-pk

Notes:

1. All jitter measurements apply for LVDS/HCSL/LVPECL/CML output format with a low noise differential input clock and are made with an Agilent 90804 oscilloscope. All RJ measurements use RJ/DJ separation.
2. For best jitter performance, keep the single ended clock input slew rates at Pins 3 and 4 more than 1.0 V/ns and the differential clock input slew rates more than 0.3 V/ns.
3. All jitter data in this table is based upon all output formats being differential. When single-ended outputs are used, there is the potential that the output jitter may increase due to the nature of single-ended outputs. If your configuration implements any single-ended output and any output is required to have jitter less than 3 ps rms, contact Skyworks Solutions for support to validate your configuration and ensure the best jitter performance. In many configurations, CMOS outputs have little to no effect upon jitter.
4. D_J for PCI and GbE is < 5 ps pp
5. Output MultiSynth in Integer mode.
6. All output clocks 100 MHz HCSL format. Jitter is from the PCIE jitter filter combination that produces the highest jitter. See AN562 for details. Jitter is measured with the Intel Clock Jitter Tool, Ver. 1.6.4.
7. Input frequency to the Phase Detector between 25 and 40 MHz and any output frequency ≥ 5 MHz.
8. Measured in accordance with JEDEC standard 65.
9. Rj is multiplied by 14; estimate the pp jitter from Rj over 2^{12} rising edges.
10. Gen 4 specifications based on the PCI-Express Base Specification 4.0 rev. 0.5.
11. Download the Skyworks Solutions PCIe Clock Jitter Tool at https://www.skyworksinc.com/en/application-pages/pci-express-learning-center.

Table 12. Jitter Specifications[1,2,3] (Continued)
(V_{DD} = 1.8 V –5% to +10%, 2.5 V ±10%, or 3.3 V ±10%, T_A = –40 to 85 °C)

Parameter	Symbol	Test Condition	Min	Typ	Max	Unit
Cycle-Cycle Jitter	J_{CC}	N = 10,000 cycles Output MultiSynth operated in integer or fractional mode[7]	—	9	29	ps pk[8]
Random Jitter (12 kHz–20 MHz)	R_J	Output and feedback MultiSynth in integer or fractional mode[7]	—	0.7	1.5	ps RMS
Deterministic Jitter	D_J	Output MultiSynth operated in fractional mode[7]	—	3	15	ps pk-pk
		Output MultiSynth operated in integer mode[7]	—	2	10	ps pk-pk
Total Jitter (12 kHz–20 MHz)	$T_J = D_J+14xR_J$ (See Note 9)	Output MultiSynth operated in fractional mode[7]	—	13	36	ps pk-pk
		Output MultiSynth operated in integer mode[7]	—	12	20	ps pk-pk

Notes:
1. All jitter measurements apply for LVDS/HCSL/LVPECL/CML output format with a low noise differential input clock and are made with an Agilent 90804 oscilloscope. All RJ measurements use RJ/DJ separation.
2. For best jitter performance, keep the single ended clock input slew rates at Pins 3 and 4 more than 1.0 V/ns and the differential clock input slew rates more than 0.3 V/ns.
3. All jitter data in this table is based upon all output formats being differential. When single-ended outputs are used, there is the potential that the output jitter may increase due to the nature of single-ended outputs. If your configuration implements any single-ended output and any output is required to have jitter less than 3 ps rms, contact Skyworks Solutions for support to validate your configuration and ensure the best jitter performance. In many configurations, CMOS outputs have little to no effect upon jitter.
4. D_J for PCI and GbE is < 5 ps pp
5. Output MultiSynth in Integer mode.
6. All output clocks 100 MHz HCSL format. Jitter is from the PCIE jitter filter combination that produces the highest jitter. See AN562 for details. Jitter is measured with the Intel Clock Jitter Tool, Ver. 1.6.4.
7. Input frequency to the Phase Detector between 25 and 40 MHz and any output frequency ≥ 5 MHz.
8. Measured in accordance with JEDEC standard 65.
9. Rj is multiplied by 14; estimate the pp jitter from Rj over 2^{12} rising edges.
10. Gen 4 specifications based on the PCI-Express Base Specification 4.0 rev. 0.5.
11. Download the Skyworks Solutions PCIe Clock Jitter Tool at https://www.skyworksinc.com/en/application-pages/pci-express-learning-center.

Table 13. Jitter Specifications, Clock Buffer Mode (PLL Bypass)*
(V_{DD} = 1.8 V –5% to +10%, 2.5 V ±10%, or 3.3 V ±10%, T_A = –40 to 85 °C)

Parameter	Symbol	Test Condition	Min	Typ	Max	Unit
Additive Phase Jitter (12 kHz–20 MHz)	t_{RPHASE}	0.7 V pk-pk differential input clock at 622.08 MHz with 70 ps rise/fall time	—	0.165	—	ps RMS
Additive Phase Jitter (50 kHz–80 MHz)	$t_{RPHASEWB}$	0.7 V pk-pk differential input clock at 622.08 MHz with 70 ps rise/fall time	—	0.225	—	ps RMS
***Note:** All outputs are in Clock Buffer mode (PLL Bypass).						

Table 14. Typical Phase Noise Performance

Offset Frequency	25 MHz XTAL to 156.25 MHz	27 MHz Ref In to 148.3517 MHz	19.44 MHz Ref In to 155.52 MHz	Units
100 Hz	–90	–87	–110	dBc/Hz
1 kHz	–120	–117	–116	dBc/Hz
10 kHz	–126	–123	–123	dBc/Hz
100 kHz	–132	–130	–128	dBc/Hz
1 MHz	–132	–132	–128	dBc/Hz
10 MHz	–145	–145	–145	dBc/Hz

Table 15. I²C Specifications (SCL,SDA)[1]

Parameter	Symbol	Test Condition	Standard Mode		Fast Mode		Unit
			Min	Max	Min	Max	
LOW Level Input Voltage	V_{ILI2C}		–0.5	0.3 x V_{DDI2C}	–0.5	0.3 x V_{DDI2C}[2]	V
HIGH Level Input Voltage	V_{IHI2C}		0.7 x V_{DDI2C}	3.63	0.7 x V_{DDI2C}[2]	3.63	V
Hysteresis of Schmitt Trigger Inputs	V_{HYS}		N/A	N/A	0.1	—	V
LOW Level Output Voltage (open drain or open collector) at 3 mA Sink Current	V_{OLI2C}[2]	V_{DDI2C}[2] = 2.5/3.3 V	0	0.4	0	0.4	V
		V_{DDI2C}[2] = 1.8 V	N/A	N/A	0	0.2 x V_{DDI2C}	V
Input Current	I_{I2C}		–10	10	–10	10	µA
Capacitance for each I/O Pin	C_{I2C}	V_{IN} = –0.1 to V_{DDI2C}	—	4	—	4	pF
I²C Bus Timeout	—	Timeout Enabled	25	35	25	35	ms
Data Rate		Standard Mode	100		400		kbps
Hold Time (Repeated) START Condition	$t_{HD:STA}$		4.0	—	0.6	—	µs
Set-Up Time for a Repeated START Condition	$t_{SU:STA}$		4.7	—	0.6	—	µs
Data Hold Time[3,4]	$t_{HD:DAT}$		100	—	100	—	ns
Data Set-Up Time	$t_{SU:DAT}$		250	—	150	—	ns

Notes:
1. Refer to NXP's UM10204 I²C-bus specification and user manual UM10204_3 for further details:
2. I²C pullup voltages (VDDI2C) of 1.71 to 3.63 V are supported. Must write register 27[7] = 1 if the I²C bus voltage is less than 2.5 V to maintain compatibility with the I²C bus standard.
3. Hold time is defined as the time that data should hold its logical value after clock has transitioned to a logic low.
4. Guaranteed by characterization.

2. Typical Application Circuits

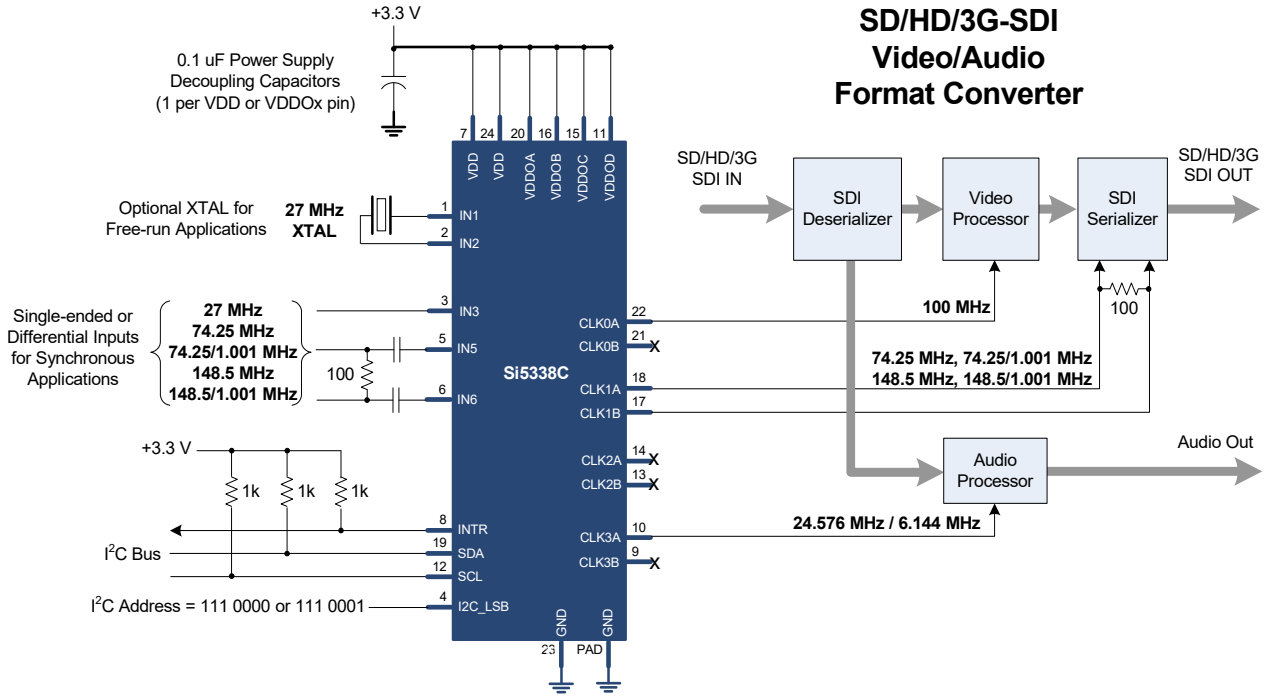

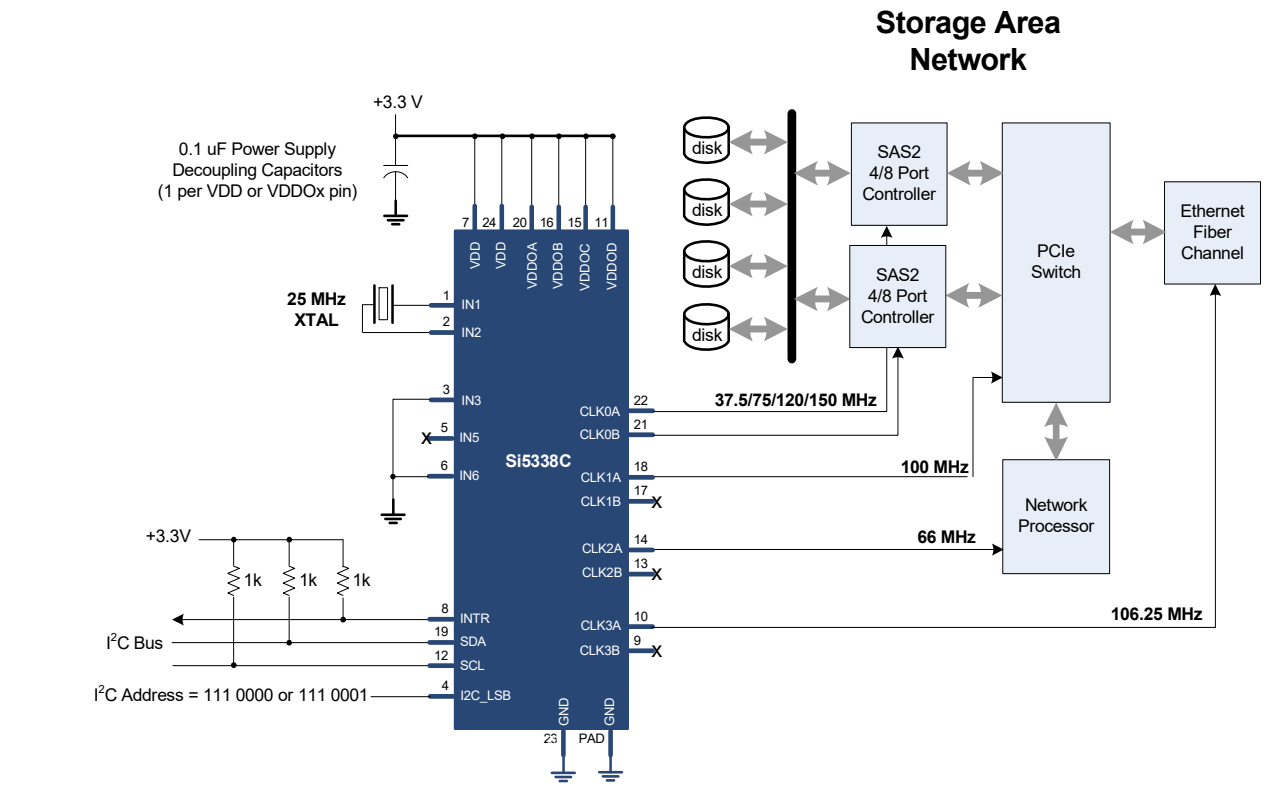

3. Functional Description

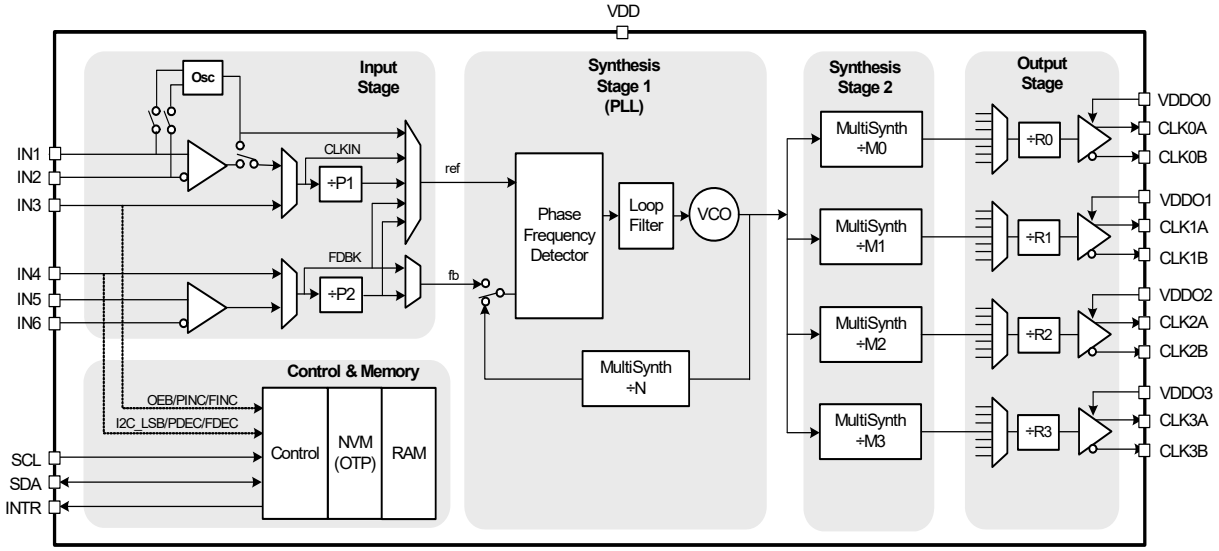

Figure 1. Si5338 Block Diagram

3.1. Overview

The Si5338 is a high-performance, low-jitter clock generator capable of synthesizing four independent user-programmable clock frequencies up to 350 MHz and select frequencies up to 710 MHz. The device supports free-run operation using an external crystal, or it can lock to an external clock for generating synchronous clocks. The output drivers support four differential clocks or eight single-ended clocks or a combination of both. The output drivers are configurable to support common signal formats, such as LVPECL, LVDS, HCSL, CMOS, HSTL, and SSTL. Separate output supply pins allow supply voltages of 3.3, 2.5, 1.8, and 1.5 V to support the multi-format output driver. The core voltage supply accepts 3.3, 2.5, or 1.8 V and is independent from the output supplies.

Using its two-stage synthesis architecture and patented high-resolution MultiSynth technology, the Si5338 can generate four independent frequencies from a single input frequency. In addition to clock generation, the inputs can bypass the synthesis stage enabling the Si5338 to be used as a high-performance clock buffer or a combination of a buffer and generator.

For applications that need fine frequency adjustments, such as clock margining, each of the synthesized frequencies can be incremented or decremented in user-defined steps as low as 1 ppm per step.

Output-to-output phase delays are also adjustable in user-defined steps with an error of <20 ps to compensate for PCB trace delays or for fine tuning of setup and hold margins.

A zero-delay mode is also available to help minimize input-to-output delay. Spread spectrum is available on each of the clock outputs for EMI-sensitive applications, such as PCI Express.

Configuration and control of the Si5338 is mainly handled through the I^2C/SMBus interface. Some features, such as output enable and frequency or phase adjustments, can optionally be pin controlled. The device has a maskable interrupt pin that can be monitored for loss of lock or loss of input signal conditions.

The device also provides the option of storing a user-definable clock configuration in its non-volatile memory (NVM), which becomes the default clock configuration at power-up.

3.1.1. ClockBuilder Pro™ Software

To simplify device configuration, Skyworks Solutions provides ClockBuilder Pro, which can operate stand alone or in conjunction with the Si5338 EVB. When the software is connected to an Si5338 EVB it will control both the supply voltages to the Si5338 as well as the entire clock path within the Si5338. ClockBuilder Pro can also measure the current delivered by the EVB regulators to each supply voltage of the Si5338. A Si5338 configuration can be written to a text file to be used by any system to configure the Si5338 via I^2C.

ClockBuilder Pro can be downloaded from https://www.skyworksinc.com/en/Application-Pages/Clockbuilder-Pro-Software

3.2. Input Stage

The input stage supports four inputs. Two are used as the *clock inputs* to the synthesis stage, and the other two are used as *feedback inputs* for zero delay or external feedback mode. In cases where external feedback is not required, all four inputs are available to the synthesis stage. The *reference selector* selects one of the inputs as the reference to the synthesis stage. The input configuration is selectable through the I^2C interface. The input MUXes are set automatically in ClockBuilder Pro (see "3.1.1. ClockBuilder Pro™ Software"). For information on setting the input MUXs manually, see the Si5338 Reference Manual: Configuring the Si5338 without ClockBuilder Pro.

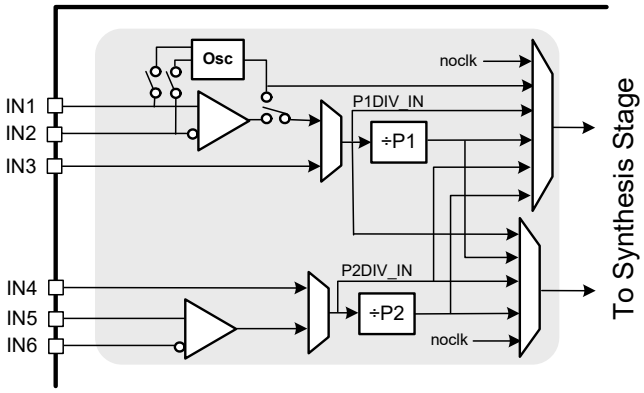

Figure 2. Input Stage

IN1/IN2 and IN5/IN6 are differential inputs capable of accepting clock rates from 5 to 710 MHz. The differential inputs are capable of interfacing to multiple signals, such as LVPECL, LVDS, HSCT, HCSL, and CML. Differential signals must be ac-coupled as shown in Figure 3. A termination resistor of 100 Ω placed close to the input pins is also required. Refer to Table 6 for signal voltage limits.

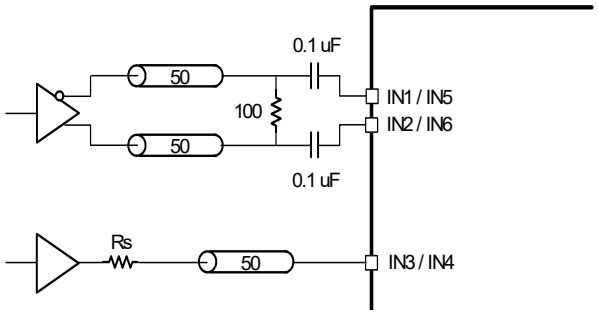

Figure 3. Interfacing Differential and Single-Ended Signals to the Si5338

IN3 and IN4 accept single-ended signals from 5 MHz to 200 MHz. The single-ended inputs are internally ac-coupled; so, they can accept a wide variety of signals without requiring a specific dc level. The input signal only needs to meet a minimum voltage swing and must not exceed a maximum VIH or a minimum VIL. Refer to Table 6 for signal voltage limits. A typical single-ended connection is shown in Figure 3. For additional termination options, refer to "AN408: Termination Options for Any-Frequency, Any-Output Clock Generators and Clock Buffers—Si5338, Si5334, Si5330".

For free-run operation, the internal oscillator can operate from a low-frequency fundamental mode crystal (XTAL) with a resonant frequency between 8 and 30 MHz. A crystal can easily be connected to pins IN1 and IN2 without external components as shown in Figure 4. See Tables 8–11 for crystal specifications that are guaranteed to work with the Si5338.

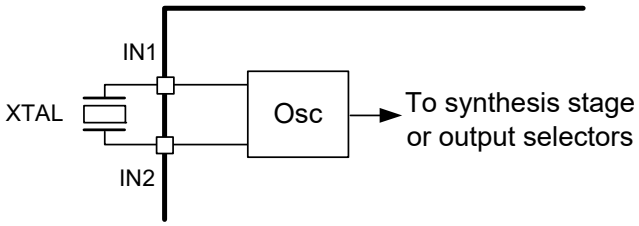

Figure 4. Connecting an XTAL to the Si5338

Refer to "AN360: Crystal Selection Guide for Si533x/5x Devices" for information on the crystal selection.

3.2.1. Loss-of-Signal (LOS) Alarm Detectors

There are two LOS detectors: LOS_CLKIN and LOS_FDBK. These detectors are tied to the outputs of the P1 and P2 frequency dividers, which are always enabled. See "3.6. Status Indicators" on page 24 for details on the alarm indicators. These alarms are used during programming to ensure that a valid input clock is detected. The input MUXs are set automatically in ClockBuilder Pro (see the Si5338 Reference Manual to set manually).

3.3. Synthesis Stages

Next-generation timing applications require a wide range of frequencies that are often non-integer related. Traditional clock architectures address this by using multiple single PLL ICs, often at the expense of BOM complexity and power. The Si5338 uses patented MultiSynth technology to dramatically simplify timing architectures by integrating the frequency synthesis capability of four Phase-Locked Loops (PLLs) in a single device, greatly reducing size and power requirements versus traditional solutions.

Synthesis of the output clocks is performed in two stages, as shown in Figure 5. The first stage consists of a high-frequency analog phase-locked loop (PLL) that multiplies the input stage to a frequency within the range of 2.2 to 2.84 GHz. Multiplication of the input frequency is accomplished using a proprietary and highly precise MultiSynth feedback divider (N), which allows the PLL to generate any frequency within its VCO range with much less jitter than typical fractional N PLL.

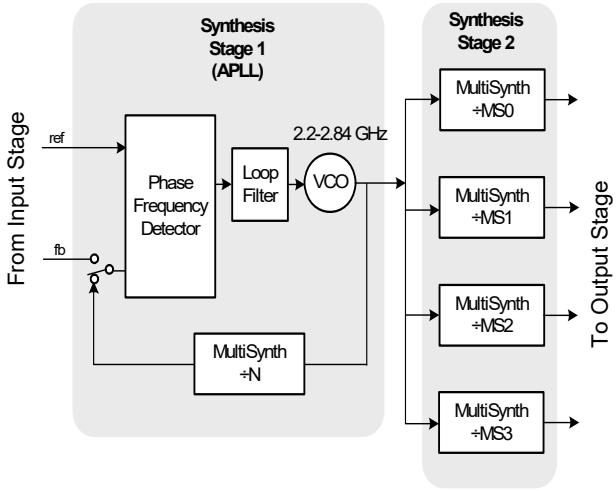

Figure 5. Synthesis Stages

The second stage of synthesis consists of the output MultiSynth dividers (MS_x). Based on a fractional N divider, the MultiSynth divider shown in Figure 6 switches seamlessly between the two closest integer divider values to produce the exact output clock frequency with 0 ppm error.

To eliminate phase error generated by this process, the MultiSynth block calculates the relative phase difference between the clock produced by the fractional-N divider and the desired output clock and dynamically adjusts the phase to match the ideal clock waveform. This novel approach makes it possible to generate any output clock frequency without sacrificing jitter performance.

This architecture allows the output of each MultiSynth to produce any frequency from 5 to $F_{VCO}/8$ MHz. To support higher frequency operation, the MultiSynth divider can be bypassed. In bypass mode, integer divide ratios of 4 and 6 are supported. This allows for output frequencies of $F_{VCO}/4$ and $F_{VCO}/6$ MHz, which translates to 367–473.33 MHz and 550–710 MHz respectively. Because each MultiSynth uses the same VCO output, there are output frequency limitations when output frequencies greater than $F_{VCO}/8$ are desired.

For example, if 375 MHz is needed at the output of MultiSynth0, the VCO frequency would need to be 2.25 GHz. Now, all the other MultiSynths can produce any frequency from 5 MHz up to a maximum frequency of 2250/8 = 281.25 MHz. MultiSynth1,2,3 could also produce $F_{VCO}/4$ = 562.5 MHz or $F_{VCO}/6$ = 375 MHz. Only two unique frequencies above $F_{VCO}/8$ can be output: $F_{VCO}/6$ and $F_{VCO}/4$.

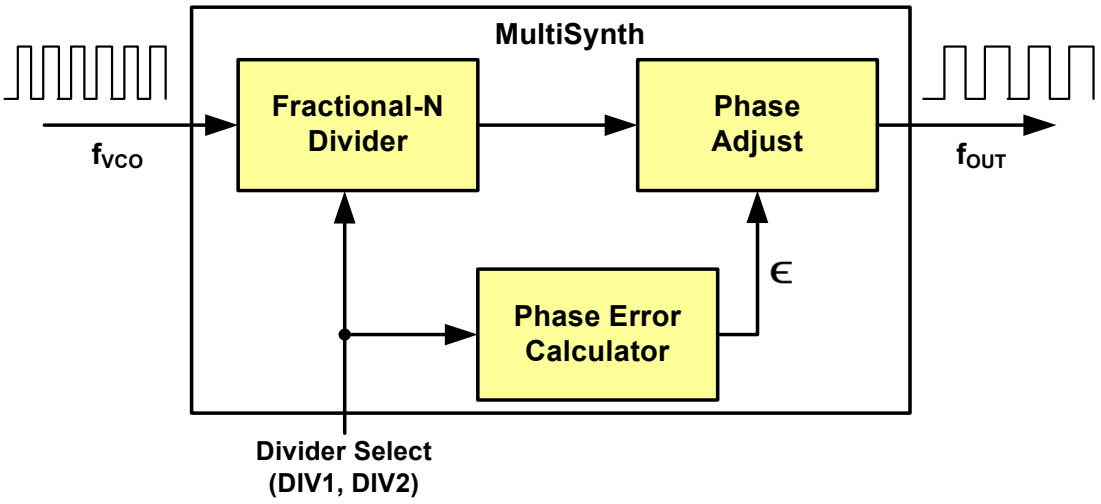

Figure 6. Skyworks Solutions' MultiSynth Technology

3.4. Output Stage

The output stage consists of output selectors, output dividers, and programmable output drivers as shown in Figure 7.

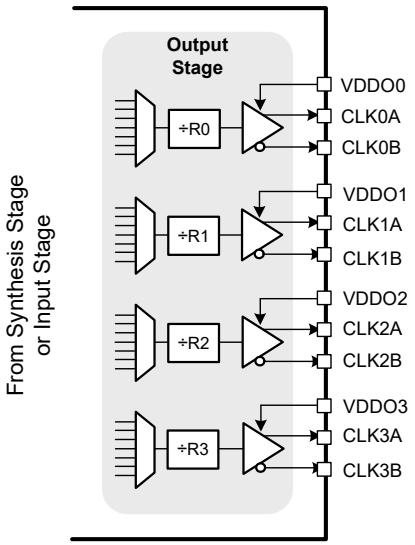

Figure 7. Output Stage

The output selectors select the clock source for the output drivers. By default, each output driver is connected to its own MultiSynth block (e.g. MS0 to CLK0, MS1 to CLK1, etc), but other combinations are possible by reconfiguring the device. The PLL can be bypassed by connecting the input stage signals (osc, ref, refdiv, fb, or fbdiv) directly to the output divider. Bypassing an input directly to an output will not allow phase alignment of that output to other outputs. Each of the output drivers can also connect to the first MultiSynth block (MS0) enabling a fan-out function. This allows the Si5338 to act as a clock generator, a fanout buffer, or a combination of both in the same package.

The output dividers (R0, R1, R2, R3) allow another stage of clock division.These dividers are configurable as divide by 1 (default), 2, 4, 8, 16, or 32. When an Rn does not equal 1, the phase alignment function for that output will not work.

The output drivers are configurable to support common signal formats, such as LVPECL, LVDS, HCSL, CMOS, HSTL, and SSTL. Separate output supply pins ($VDDO_n$) are provided for each output buffer.

The voltage on these supply pins can be 3.3, 2.5, 1.8, or 1.5 V as needed for the possible output formats. Additionally, the outputs can be configured to stop high, low, or tri-state when the PLL has lost lock. If the Si5338 is used in a zero delay mode, the output that is fed back must be set for always on, which will override any output disable signal.

Each of the outputs can also be enabled or disabled through the I^2C port. A single pin to enable/disable all outputs is available in the Si5338K/L/M.

3.5. Configuring the Si5338

The Si5338 is a highly-flexible clock generator that is entirely configurable through its I^2C interface. The device's default configuration is stored in non-volatile memory (NVM) as shown in Figure 8. The NVM is a one-time programmable memory (OTP), which can store a custom user configuration at power-up. This is a useful feature for applications that need a clock present at power-up (e.g., for providing a clock to a processor).

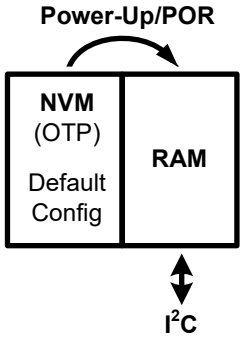

Figure 8. Si5338 Memory Configuration

During a power cycle or a power-on reset (POR), the contents of the NVM are copied into random access memory (RAM), which sets the device configuration that will be used during operation. Any changes to the device configuration after power-up are made by reading and writing to registers in the RAM space through the I^2C interface. ClockBuilder Pro (see "3.1.1. ClockBuilder Pro™ Software" on page 18) can be used to easily configure register map files that can be written into RAM (see "3.5.2. Creating a New Configuration for RAM" for details). Alternatively, the register map file can be created manually with the help of the equations in the Si5338 Reference Manual.

Two versions of the Si5338 are available. First, standard, non-customized Si5338 devices are available in which the RAM can be configured in-circuit via I^2C (example part number Si5338C-A-GM). Alternatively, standard Si5338 devices can be field-programmed using the Si5338/56-PROG-EVB field programmer. Second, custom factory-programmed Si5338 devices are available that include a user-specified startup frequency configuration (example part number Si5338C-Axxxxx-GM). See "12. Ordering Information" on page 42 for details.

3.5.1. Ordering a Custom NVM Configuration

The Si5338 is orderable with a factory-programmed custom NVM configuration. This is the simplest way of using the Si5338 since it generates the desired output frequencies at power-up or after a power-on reset (POR). This default configuration can be reconfigured in RAM through the I^2C interface after power-up (see “3.5.2. Creating a New Configuration for RAM”).

Custom 7-bit I^2C addresses may also be requested. Note that for the A/B/C devices, the I^2C LS bit address is the logical “or” of the I^2C address LS bit in Register 27 and the state of the I2C_LSB pin. If I2C_LSB pin functionality is required, custom I^2C addresses may only be even numbers. For all other variants of the device, custom I^2C addresses may be even or odd numbers. See the Si5338 Reference Manual: Configuring the Si5338 without ClockBuilder Pro for more details.

The first step in ordering a custom device is generating an NVM file which defines the input and output clock frequencies and signal formats. This is easily done using the ClockBuilder Pro software (see "3.1.1. ClockBuilder Pro™ Software" on page 18). This GUI based software generates an NVM file, which is used by the factory to manufacture custom parts. Each custom part is marked with a unique part number identifying the specific configuration (e.g., Si5338C-A00100-GM). Consult your local sales representative for more details on ordering a custom Si5338.

3.5.2. Creating a New Configuration for RAM

Any Si5338 device can be configured by writing to registers in RAM through the I^2C interface. A non-factory programmed device must be configured in this manner.

The first step is to determine all the register values for the required configuration. This can be accomplished by one of two methods.

1. Create a device configuration (register map) using ClockBuilder Pro (v3.0 or later; see "3.1.1. ClockBuilder Pro™ Software" on page 18).
    a. Configure the frequency plan.
    b. Configure the output driver format and supply voltage.
    c. Configure frequency and/or phase inc/dec (if desired).
    d. Configure spread spectrum (if desired).
    e. Configure for zero-delay mode (if desired, see "3.10.6. Zero-Delay Mode" on page 28).
    f. If needed go to the Advanced tab and make additional configurations.
    g. Save the configuration using the Options > Save Register Map File or Options > Save C code Header.
2. Create a device configuration, register by register, using the Si5338 Reference Manual.

3.5.3. Writing a Custom Configuration to RAM

Writing a new configuration (register map) to the RAM consists of pausing the LOL state-machine, writing new values to the IC accounting for the write-allowed mask (see the Si5338 Reference Manual, “10. Si5338 Registers”), validating the input clock or crystal, locking the PLL to the input with the new configuration, restarting the LOL state-machine, and calibrating the VCO for robust operation across temperature. The flow chart in Figure 9 enumerates the details:

Note: The write-allowed mask specifies which bits must be read and modified before writing the entire register byte (a.k.a. read-modify-write). “AN428: Jump Start: In-System, Flash-Based Programming for Skyworks Solutions’ Timing Products” illustrates the procedure defined in Section 3.5.2 with ANSI C code.

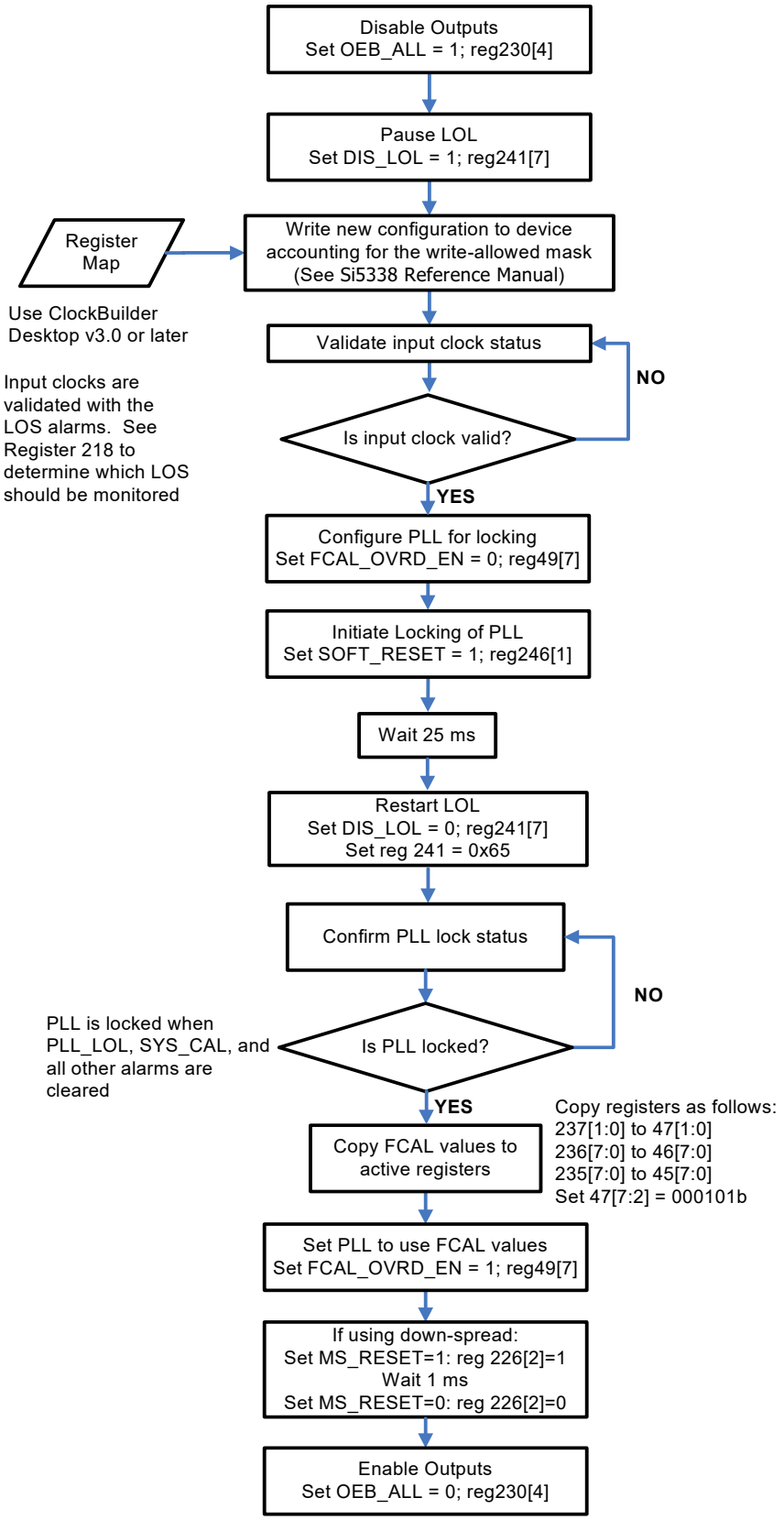

Figure 9. I²C Programming Procedure

3.5.4. Writing a Custom Configuration to NVM

An alternative to ordering an Si5338 with a custom NVM configuration is to use the field programming kit (Si5338/56-PROG-EVB) to write directly to the NVM of a “blank” Si5338. Since NVM is an OTP memory, it can only be written once. The default configuration can be reconfigured by writing to RAM through the I2C interface (see “3.5.2. Creating a New Configuration for RAM”).

3.6. Status Indicators

A logic-high interrupt pin (INTR) is available to indicate a loss of signal (LOS) condition, a PLL loss of lock (PLL_LOL) condition, or that the PLL is in process of acquiring lock (SYS_CAL). PLL_LOL is held high when the input frequency drifts beyond the PLL tracking range. It is held low during all other times and during a POR or soft_reset. SYS_CAL is held high during a POR or SOFT reset so that no chattering occurs during the locking process. As shown in Figure 10, a status register at address 218 is available to help identify the exact event that caused the interrupt pin to become active. Register 247 is the sticky version of Register 218, and Register 6 is the interrupt mask for Register 218.

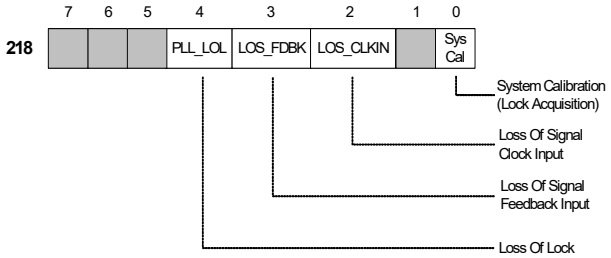

Figure 10. Status Register

Figure 11 shows a typical connection with the required pull-up resistor to VDD.

3.6.1. Using the INTR Pin in Systems with I2C

The INTR output pin is not latched and thus it should not be a polled input to an MCU but an edge-triggered interrupt. An MCU can process an interrupt event by reading the sticky register 247 to see what event caused the interrupt. The same register can be cleared by writing zeros to the bits that were set. Individual interrupt bits can be masked by register 6[4:0].

3.6.2. Using the INTR Pin in Systems without I2C

The INTR pin also provides a useful function in systems that require a pin-controlled fault indicator. Pre-setting the interrupt mask register allows the INTR pin to become an indicator for a specific event, such as LOS and/or LOL. Therefore, the INTR pin can be used to indicate a single fault event or even multiple events.

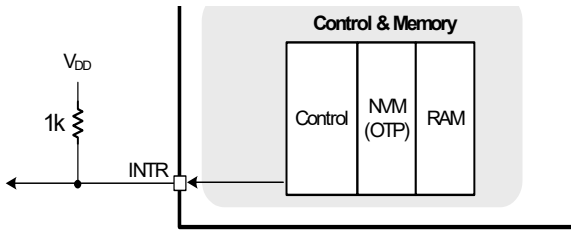

Figure 11. INTR Pin with Required Pull-Up

3.7. Output Enable

There are two methods of enabling and disabling the output drivers: Pin control, and I2C control.

3.7.1. Enabling Outputs Using Pin Control

The Si5338K/L/M devices provide an Output Enable pin (OEB) as shown in Figure 12. Pulling this pin high will turn all outputs off. The state of the individual drivers when turned off is controllable. If an individual output is set to always on, then the OEB pin will not have an effect on that driver. Drive state options and always on are explained in “3.7.2. Enabling Outputs through the I2C Interface”.

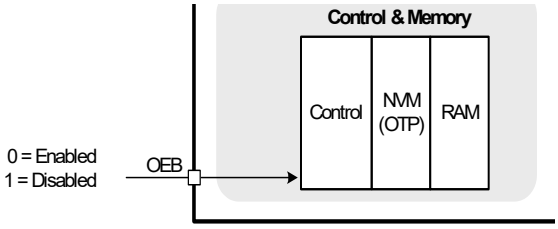

Figure 12. Output Enable Pin (Si5338K/L/M)

3.7.2. Enabling Outputs through the I2C Interface

Output enable can be controlled through the I2C interface. As shown in Figure 13, register 230[3:0] allows control of each individual output driver. Register 230[4] controls all drivers at once. When register 230[4] is set to disable all outputs, the individual output enables will have no effect. Registers 110[7:6], 114[7:6], 118[7:6], and 112[7:6] control the output disabled state as tri-state, low, high, or always on. If always on is set, that output will always be on regardless of any other register or chip state. In addition, the always on mode must be selected for an output that is fed back in a Zero Delay application.

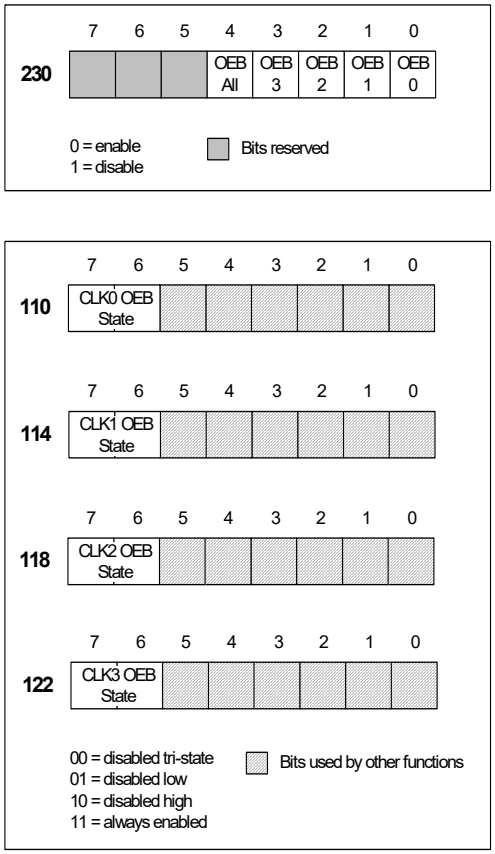

Figure 13. Output Enable Control Registers

3.8. Power Consumption

The Si5338 Power consumption is a function of

- Supply voltage
- Frequency of output Clocks
- Number of output Clocks
- Format of output Clocks

Because of internal voltage regulation, the current from the core V_{DD} is independent of the V_{DD} voltage and hence the plot shown in Figure 14 can be used to estimate the V_{DD} core (pins 7 and 24) current.

The current from the output supply voltages can be estimated from the values provided in Table 3, “DC Characteristics,” on page 5. To get the most accurate value for V_{DD} currents, the Si5338-EVB with Clockbuilder software should be used. To do this, go to the “Power” tab of the Clockbuilder and press “Measure”. In this manner, a specific configuration can be implemented on the EVB and the actual current for each supply voltage measured. When doing this it is critical that the output drivers have the proper load impedance for the selected format.

When testing for output driver current with HSTL and SSTL, it is required to have load circuitry as shown in “AN408: Termination Options for Any-Frequency, Any-Output Clock Generators and Clock Buffers”. The Si5338 EVB has layout pads that can be used for this purpose. When testing for output driver current with LVPECL the same layout pads can be used to implement the LVPECL bias resistor of 130 Ω (2.5 V VDDx) or 200 Ω (3.3 V VDDx). See the schematic in the Si5338-EVB data sheet and AN408 for additional information.

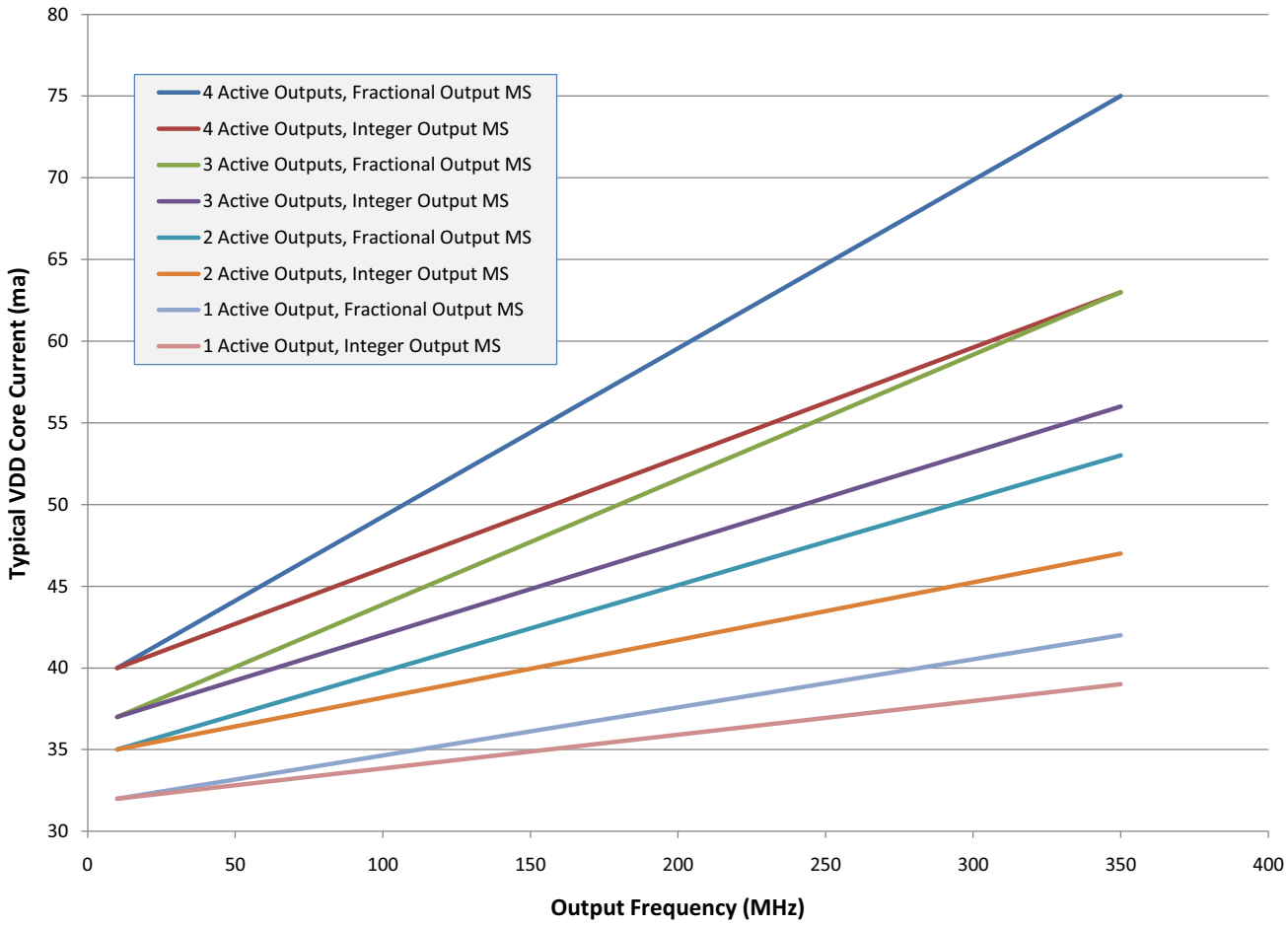

Figure 14. Core VDD Supply Average Current vs Output Frequency

3.9. Reset Options

There are two types of resets on the Si5338, POR and soft reset. A POR reset automatically occurs whenever the supply voltage on the VDD is applied.

The soft reset is forced by writing 0x02 to register 246. This bit is not self-clearing, and thus it may read back as a 1 or a 0. A soft reset will not download any pre-programmed NVM and will not change any register values in RAM.

The soft reset performs the following sequence:

1. All outputs turn off except if programmed to be always on.
2. Internal calibrations are done and MultiSynths are initialized.
    a. Outputs that are synchronous are phase aligned (if Rn = 1).
3. 25 ms is allowed for the PLL to lock (no delay occurs when FCAL_OVRD_EN = 1).
4. Turn on all outputs that were turned off in step 1.

3.10. Features of the Si5338

The Si5338 offers several features and functions that are useful in many timing applications. The following paragraphs describe in detail the main features and typical applications. All of these features can be easily configured using the ClockBuilder Pro. See "3.1.1. ClockBuilder Pro™ Software" on page 18.

3.10.1. Frequency Increment/Decrement

Each of the output clock frequencies can be independently stepped up or down in predefined steps as low as 1 ppm per step and with a resolution of 1 ppm. Setting of the step size and control of the frequency increment or decrement is accomplished through the I^2C interface. Alternatively, the Si5338 can be ordered with optional frequency increment (FINC) and frequency decrement (FDEC) pins for pin-controlled applications. Note that FINC and FDEC pins only affect CLK0. Frequency increment and decrement of all other channels must be performed by I^2C writes to the appropriate registers. See Table 17 on page 37 for ordering information of pin-controlled devices. When phase is decremented, the MultiSynth output clock edge will happen sooner which will create a single half cycle that is shorter than expected for the MultiSynth output clock frequency. Care must be taken to insure that a single phase decrement does not produce a half cycle that is less than 4/fvco or an unwanted glitch in the MultiSynth output may occur.

The frequency increment and decrement feature is useful in applications requiring a variable clock frequency (e.g., CPU speed control, FIFO overflow management, etc.) or in applications where frequency margining (e.g., f_{out} ±5%) is necessary for design verification and manufacturing test. Frequency increment or decrement can be applied as fast as 1.5 MHz when it is done by pin control. When under I^2C control, the frequency increment and decrement update rate is limited by the I^2C bus speed. The magnitude of the frequency step has 0 ppm error. Frequency steps are seamless and glitchless.

If a frequency increment/decrement command causes the MultiSynth output frequency to exceed the maximum/minimum limits, then a glitch on the output is likely to occur. The max frequency of a MultiSynth output that is using frequency increment/decrement is Fvco/8, and the minimum frequency is 5 MHz.

3.10.2. Output Phase Increment/Decrement

The Si5338 has a digitally-controlled glitchless phase increment and decrement feature that allows adjusting the phase of each output clock in relation to the other output clocks. The phase of each output clock can be adjusted with an accuracy of 20 ps over a range of ±45 ns. Setting of the step size and control of the phase increment or decrement is accomplished through the I^2C interface. Alternatively, the Si5338 can be ordered with optional phase increment (PINC) and phase decrement (PDEC) pins for pin-controlled applications. In pin controlled applications the phase increment and decrement update rate is as fast as 1.5 MHz. In I^2C applications, the maximum update rate is limited by the speed of the I^2C. See Table 17 for ordering information of pin-controlled devices. When phase is decremented, the MultiSynth output clock edge will happen sooner, which will create a single half cycle that is shorter than expected for the MultiSynth output clock frequency. Care must be taken to insure that a single phase decrement does not produce a half cycle that is less than 4/fvco or an unwanted glitch in the MultiSynth output may occur.

The phase increment and decrement feature provides a useful method for fine tuning setup and hold timing margins or adjusting for mismatched PCB trace lengths.

3.10.3. Programmable Initial Phase Offset

Each output clock can be set for its initial phase offset up to ±45 ns. In order for the initial phase offset to be applied correctly at power up, the VDDOx output supply voltage must cross 1.2 V before the VDD (pins 7,24) core power supply voltage crosses 1.45 V. This applies to the each driver output individually. A soft_reset will also guarantee that the programmed Initial Phase Offset is applied correctly. The initial phase offset only works on outputs that have their R divider set to 1.

3.10.4. Output Synchronization

Upon power up or a soft_reset the Si5338 synchronizes the output clocks. With normal output polarity (no output clock inversion), the Si5338 synchronizes the output clocks to the falling, not rising edge. Synchronization at the rising edge can be done by inverting all the clocks that are to be synchronized.

3.10.5. Output R Divider

When the requested output frequency of a channel is below 5 MHz, the Rn (n = 0,1,2,3) divider needs to be set and enabled. This is automatically done in register maps generated by the ClockBuilder Pro. When the Rn divider is active the step size range of the frequency increment and decrement function will decrease by the Rn divide ratio. The Rn divider can be set to {1, 2, 4, 8, 16, 32}.

Non-unity settings of R0 will affect the Finc/Fdec step size at the MultiSynth0 output. For example, if the MultiSynth0 output step size is 2.56 MHz and R0 = 8, the step size at the output of R0 will be 2.56 MHz divided by 8 = .32 MHz. When the Rn divider is set to non-unity, the initial phase offset of the CLKn output with respect to other CLKn outputs is not guaranteed.

3.10.6. Zero-Delay Mode

The Si5338 supports an optional zero delay mode of operation for applications that require minimal input-to-output delay. In this mode, one of the device output clocks is fed back to the feedback input pin (IN4 or IN5/IN6) to implement an external feedback path which nullifies the delay between the reference input and the output clocks. Figure 15 shows the Si5338 in a typical zero-delay configuration. It is generally recommended that Clk3 be LVDS and that the feedback input be pins 5 and 6. For the differential input configuration to pins 5 and 6, see Figure 3 on page 19. The zero-delay mode combined with the phase increment/decrement feature allows unprecedented flexibility in generating clocks with precise edge alignment.

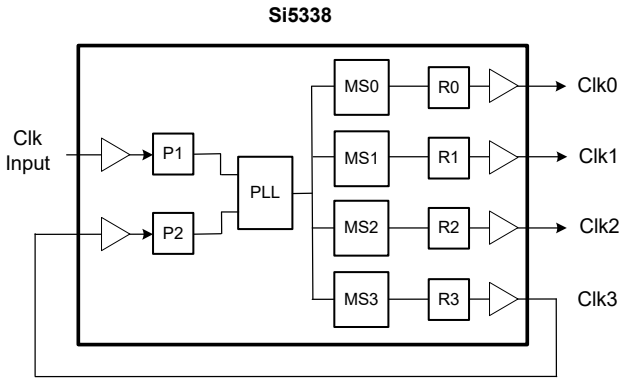

Figure 15. Si5338 in Zero Delay Clock Generator Mode

3.10.7. Spread Spectrum

To help reduce electromagnetic interference (EMI), the Si5338 supports spread spectrum modulation. The output clock frequencies can be modulated to spread energy across a broader range of frequencies, lowering system EMI. The Si5338 implements spread spectrum using its patented MultiSynth technology to achieve previously unattainable precision in both modulation rate and spreading magnitude as shown in Figure 16. Through I^2C control, the Spread spectrum can be applied to any output clock, any clock frequency, and any spread amount from ±0.1% to ±2.5% center spread and –0.1% to –5% down spread.

The spreading rate is limited to 30 to 63 kHz.

The Spread Spectrum is generated digitally in the output MultiSynths which means that the Spread Spectrum parameters are virtually independent of process, voltage and temperature variations. Since the Spread Spectrum is created in the output MultiSynths, through I^2C each output channel can have independent Spread Spectrum parameters. Without the use of I^2C (NVM download only) the only supported Spread Spectrum parameters are for PCI Express compliance composing 100 MHz clock, 31.5 kHz spreading frequency with the choice of the spreading.

Rev A devices provide native support for both down and center spread. Center spread is supported in rev B devices by up-shifting the nominal frequency and using down-spread register parameters. Consult the Si5338 Reference Manual for details.

Note: If you currently use center spread on a revision A and would like to migrate to a revision B device, you must generate a new register map using either ClockBuilder Pro or the equations in the Si5338 Reference Manual. Center spread configurations for Revisions A and B are **not** compatible.

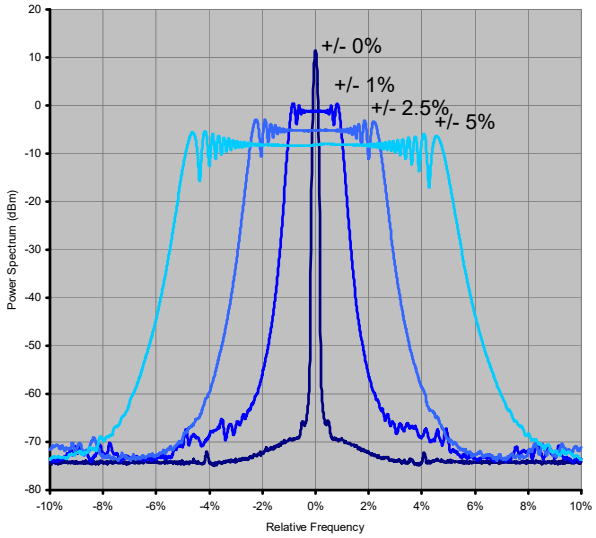

Figure 16. Configurable Spread Spectrum

4. Applications of the Si5338

Because of its flexible architecture, the Si5338 can be configured to serve several functions in the timing path. The following sections describe some common applications.

4.1. Free-Running Clock Generator

Using the internal oscillator (Osc) and an inexpensive external crystal (XTAL), the Si5338 can be configured as a free-running clock generator for replacing high-end and long-lead-time crystal oscillators found on many printed circuit boards (PCBs). Replacing several crystal oscillators with a single IC solution helps consolidate the bill of materials (BOM), reduces the number of suppliers, and reduces the number of long-lead-time components on the PCB. In addition, since crystal oscillators tend to be the least reliable aspect of many systems, the overall FIT rate improves with the elimination of each oscillator.

Up to four independent clock frequencies can be generated at any rate within its supported frequency range and with any of supported output types. Features, such as frequency increment and decrement and phase adjustments on a per-output basis, provide unprecedented flexibility for PCB designs. Figure 17 shows the Si5338 configured as a free-running clock generator.

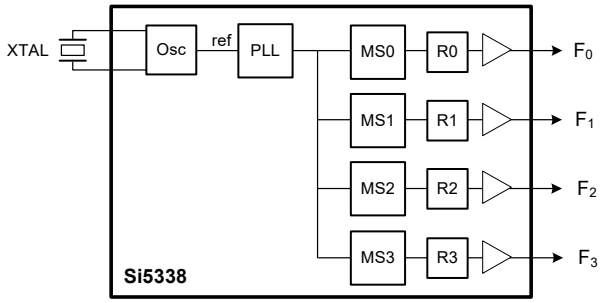

Figure 17. Si5338 as a Free-Running Clock Generator

4.2. Synchronous Frequency Translation

In other cases, it is useful to generate an output frequency that is synchronous (or phase-locked) to another clock frequency. The Si5338 is the ideal choice for generating up to four clocks with different frequencies with a fixed phase relationship to an input reference. Because of its highly precise frequency synthesis, the Si5338 can generate all four output frequencies with 0 ppm error to the input reference. The Si5338 is an ideal choice for applications that have traditionally required multiple stages of frequency synthesis to achieve complex frequency translations. Examples are in broadcast video (e.g., 148.5 MHz to 148.351648351648 MHz), WAN/LAN applications (e.g. 155.52 MHz to 156.25 MHz), and Forward Error Correction (FEC) applications (e.g., 156.25 MHz to 161.1328125 MHz). Using the input reference selectors, the Si5338 can select from one of four inputs (IN1/IN2, IN3, IN4, and IN5/IN6). Figure 18 shows the Si5338 configured as a synchronous clock generator. Frequencies and multiplication ratios may be entered into ClockBuilder Pro using fractional notation to ensure that the exact scaling ratios can be achieved.

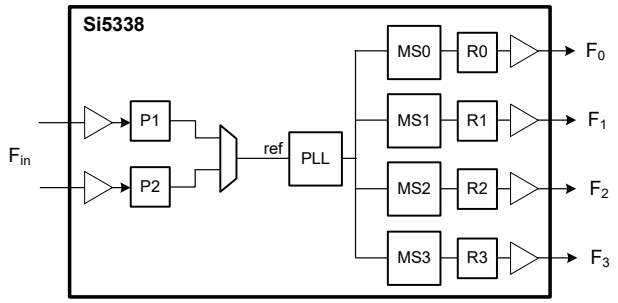

Figure 18. Si5338 as a Synchronous Clock Generator or Frequency Translator

4.3. Configurable Buffer and Level Translator

Using the output selectors, the synthesis stage can be entirely bypassed allowing the Si5338 to act as a configurable clock buffer/divider with level translation and selectable inputs. Because of its highly selectable configuration, virtually any combination is possible. The configurable output drivers allow four differential outputs, eight single-ended outputs, or a combination of both. Figure 19 shows the Si5338 configured as a flexible clock buffer.

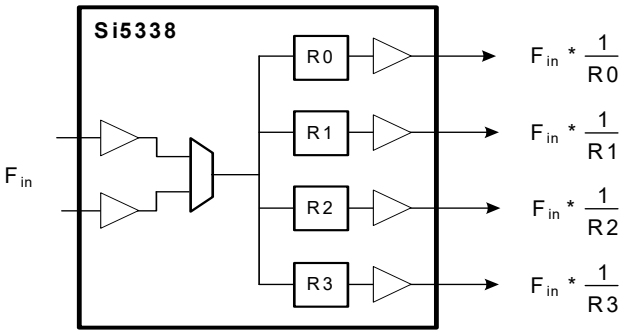

Figure 19. Si5338 as a Configurable Clock Buffer/Divider with Level Translation

4.3.1. Combination Free-Running and Synchronous Clock Generator

Another application of the Si5338 is in generating both free-running and synchronous clocks in one device. This is accomplished by configuring the input and output selectors for the desired split configuration. An example of such an application is shown in Figure 20.

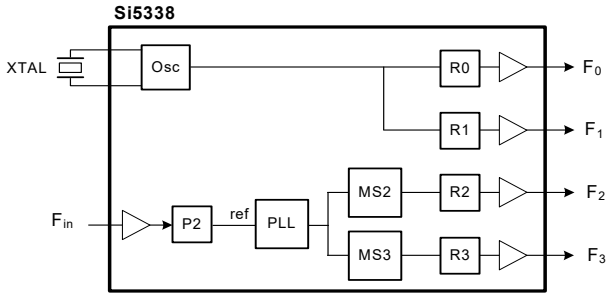

Figure 20. Si5338 In a Free-Running and Synchronous Clock Generator Application

5. I²C Interface

Configuration and operation of the Si5338 is controlled by reading and writing to the RAM space using the I²C interface. The device operates in slave mode with 7-bit addressing and can operate in Standard-Mode (100 kbps) or Fast-Mode (400 kbps) and supports burst data transfer with auto address increments.

The I²C bus consists of a bidirectional serial data line (SDA) and a serial clock input (SCL) as shown in Figure 21. Both the SDA and SCL pins must be connected to the VDD supply via an external pull-up as recommended by the I²C specification.

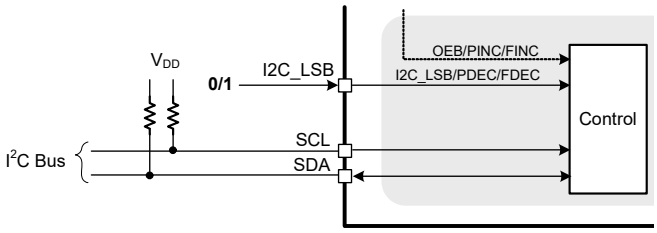

Figure 21. I²C and Control Signals

The 7-bit device (slave) address of the Si5338 consists of a 6-bit fixed address plus a user-selectable LSB bit as shown in Figure 22. The LSB bit is selectable using the optional I2C_LSB pin which is available as an ordering option for applications that require more than one Si5338 on a single I²C bus. Devices without the I2C_LSB pin option have a fixed 7-bit address of 70h (111 0000) as shown in Figure 22. Other custom I²C addresses are also possible. See Table 17 for details on device ordering information with the optional I2C_LSB pin.

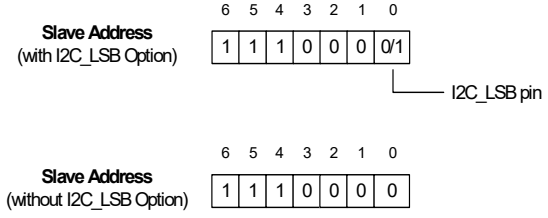

Figure 22. Si5338 I²C Slave Address

Data is transferred MSB first in 8-bit words as specified by the I²C specification. A write command consists of a 7-bit device (slave) address + a write bit, an 8-bit register address, and 8 bits of data as shown in Figure 23. A write burst operation is also shown where every additional data word is written using an auto-incremented address.

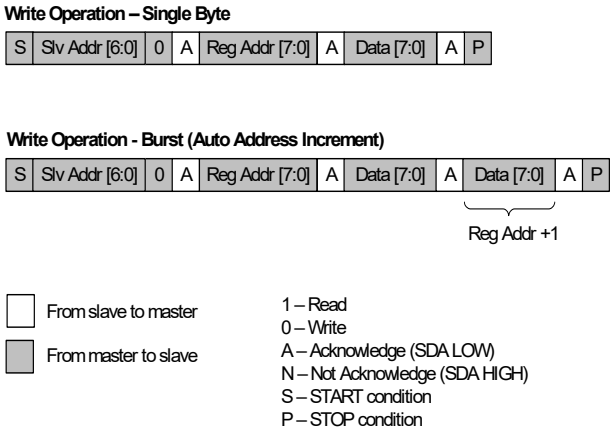

Figure 23. I²C Write Operation

A read operation is performed in two stages. A data write is used to set the register address, then a data read is performed to retrieve the data from the set address. A read burst operation is also supported. This is shown in Figure 24.

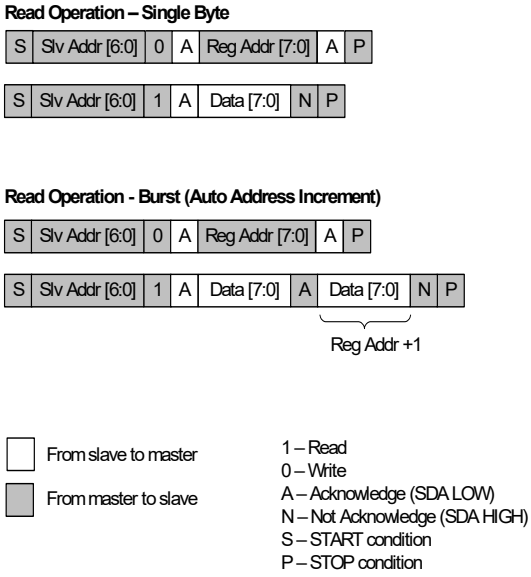

Figure 24. I²C Read Operation

AC and dc electrical specifications for the SCL and SDA pins are shown in Table 15. The timing specifications and timing diagram for the I²C bus are compatible with the I²C-Bus Standard. SDA timeout is supported for compatibility with SMBus interfaces.

The I²C bus can be operated at a bus voltage of 1.71 to 3.63 V and is 3.3 V tolerant. If a bus voltage of less than 2.5 V is used, register 27[7] = 1 must be written to maintain compatibility with the I²C bus standard.

6. Si5338 Registers

For many applications, the Si5338's register values are easily configured using ClockBuilder Pro (see "3.1.1. ClockBuilder Pro™ Software" on page 18). However, for customers interested in using the Si5338 in operating modes beyond the capabilities available with ClockBuilder™, refer to the Si5338 Reference Manual: Configuring the Si5338 without ClockBuilder Pro for a detailed description of the Si5338 registers and their usage. Also refer to “AN428: Jump Start: In-System, Flash-Based Programming for Skyworks Solutions’ Timing Products” for a working application example using Skyworks Solutions' F301 MCU to program the Si5338 register set.

7. Pin Descriptions

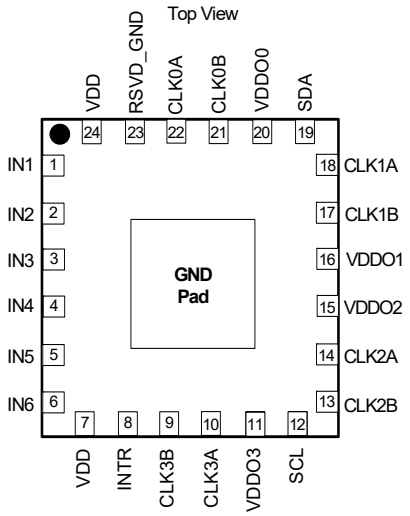

Note: Center pad must be tied to GND for normal operation.

Table 16. Si5338 Pin Descriptions

Pin #	Pin Name	I/O	Signal Type	Description
1,2	IN1/IN2	I	Multi	**CLKIN/CLKINB.** These pins are used as the main differential clock input or as the XTAL input. See "3.2. Input Stage" on page 19, Figure 3 and Figure 4, for connection details. Clock inputs to these pins must be ac-coupled. Keep the traces from pins 1,2 to the crystal as short as possible and keep other signals and radiating sources away from the crystal. When not in use, leave IN1 unconnected and IN2 connected to GND.

Table 16. Si5338 Pin Descriptions (Continued)

Pin #	Pin Name	I/O	Signal Type	Description
3	IN3	I	Multi	This pin can have one of the following functions depending on the part number: **CLKIN** (for Si5338A/B/C and Si5338N/P/Q devices only) Provides a high-impedance clock input for single ended clock signals. This input should be dc-coupled as shown in “3.2. Input Stage”, Figure 3. If this pin is not used, it should be connected to ground. **PINC** (for Si5338D/E/F devices only) Used as the phase increment pin. See "3.10.2. Output Phase Increment/Decrement" on page 27 for more details. Minimum pulse width of 100 ns is required for proper operation. If this pin is not used, it should be connected to ground. **FINC** (for Si5338G/H/J devices only) Used as the frequency increment pin. See "3.10.1. Frequency Increment/Decrement" on page 27 for more details. Minimum pulse width of 100 ns is required for proper operation. If this pin is not used, it should be connected to ground. **OEB** (for Si5338K/L/M devices only) Used as an output enable pin. 0 = All outputs enabled; 1 = All outputs disabled. By default, outputs are tri-stated when disabled.
4	IN4	I	Multi	This pin can have one of the following functions depending on the part number **I^2C_LSB** (for Si5338A/B/C and Si5338K/L/M devices only) This is the LSB of the Si5338 I^2C address. 0 = I^2C address 70h (111 0000), 1 = I^2C address 71h (111 0001). **FDBK** (for Si5338N/P/Q devices only) Provides a high-impedance feedback input for single-ended clock signals. This input should be dc-coupled as shown in “3.2. Input Stage”, Figure 3. If this pin is not used, it should be connected to ground. **PDEC** (for Si5338D/E/F) devices only) Used as the phase decrement pin. See “3.10.2. Output Phase Increment/Decrement” for more details. Minimum pulse width of 100 ns is required for proper operation. If this pin is not used, it should be connected to ground. **FDEC** (for Si5338G/H/J devices only) Used as the frequency decrement pin. See “3.10.1. Frequency Increment/Decrement” for more details. Minimum pulse width of 100 ns is required for proper operation. If this pin is not used, it should be connected to ground.

Table 16. Si5338 Pin Descriptions (Continued)

Pin #	Pin Name	I/O	Signal Type	Description
5,6	IN5/IN6	I	Multi	**FDBK/FDBKB.** These pins can be used as a differential feedback input in zero delay mode or as a secondary clock input. See section 3.2, Figure 3, for termination details. See "3.10.6. Zero-Delay Mode" on page 28 for zero delay mode set-up. Inputs to these pins must be ac-coupled. When not in use, leave IN5 unconnected and IN6 connected to GND.
7	VDD	VDD	Supply	**Core Supply Voltage.** This is the core supply voltage, which can operate from a 1.8, 2.5, or 3.3 V supply. A 0.1 µF bypass capacitor should be located very close to this pin.
8	INTR	O	Open Drain	**Interrupt.** A typical pullup resistor of 1–4 kΩ is used on this pin. This pin can be pulled up to a supply voltage as high as 3.6 V regardless of the other supply voltages on pins 7, 11, 15, 16, 20, and 24. The interrupt condition allows the pull up resistor to pull the output up to the supply voltage.
9	CLK3B	O	Multi	**Output Clock B for Channel 3.** May be a single-ended output or half of a differential output with CLK3A being the other differential half. If unused, leave this pin floating.
10	CLK3A	O	Multi	**Output Clock A for Channel 3.** May be a single-ended output or half of a differential output with CLK3B being the other differential half. If unused, leave this pin floating.
11	VDDO3	VDD	Supply	**Output Clock Supply Voltage.** Supply voltage (3.3, 2.5, 1.8, or 1.5 V) for CLK3A,B. A 0.1 µF capacitor must be located very close to this pin. If CLK3 is not used, this pin must be tied to VDD (pin 7, 24).
12	SCL	I	LVCMOS	**I^2C Serial Clock Input.** This is the serial clock input for the I^2C bus. A pullup resistor at this pin is required. Typical values would be 1–4 kΩ. See the I^2C bus spec for more information. This pin is 3.3 V tolerant regardless of the other supply voltages on pins 7, 11, 15, 16, 20, 24. See Register 27.
13	CLK2B	O	Multi	**Output Clock B for Channel 2.** May be a single-ended output or half of a differential output with CLK2A being the other differential half. If unused, leave this pin floating.
14	CLK2A	O	Multi	**Output Clock A for Channel 2.** May be a single-ended output or half of a differential output with CLK2B being the other differential half. If unused, leave this pin floating.

Table 16. Si5338 Pin Descriptions (Continued)

Pin #	Pin Name	I/O	Signal Type	Description
15	VDDO2	VDD	Supply	**Output Clock Supply Voltage.** Supply voltage (3.3, 2.5, 1.8, or 1.5 V) for CLK2A,B. A 0.1 µF capacitor must be located very close to this pin. If CLK2 is not used, this pin must be tied to VDD (pin 7, 24).
16	VDDO1	VDD	Supply	**Output Clock Supply Voltage.** Supply voltage (3.3, 2.5, 1.8, or 1.5 V) for CLK1A,B. A 0.1 µF capacitor must be located very close to this pin. If CLK1 is not used, this pin must be tied to VDD (pin 7, 24).
17	CLK1B	O	Multi	**Output Clock B for Channel 1.** May be a single-ended output or half of a differential output with CLK1A being the other differential half. If unused, leave this pin floating.
18	CLK1A	O	Multi	**Output Clock A for Channel 1.** May be a single-ended output or half of a differential output with CLK1B being the other differential half. If unused, leave this pin floating.
19	SDA	I/O	LVCMOS	**I^2C Serial Data.** This is the serial data for the I^2C bus. A pullup resistor at this pin is required. Typical values would be 1–4 kΩ. See the I^2C bus spec for more information. This pin is 3.3 V tolerant regardless of the other supply voltages on pins 7, 11, 15, 16, 20, 24. See Register 27.
20	VDDO0	VDD	Supply	**Output Clock Supply Voltage.** Supply voltage (3.3, 2.5, 1.8, or 1.5 V) for CLK0A,B. A 0.1 µF capacitor must be located very close to this pin. If CLK0 is not used, this pin must be tied to VDD (pin 7, 24).
21	CLK0B	O	Multi	**Output Clock B for Channel 0.** May be a single-ended output or half of a differential output with CLK0A being the other differential half. If unused, leave this pin floating.
22	CLK0A	O	Multi	**Output Clock A for Channel 0.** May be a single-ended output or half of a differential output with CLK0B being the other differential half. If unused, leave this pin floating.
23	RSVD_GND	GND	GND	**Ground.** Must be connected to system ground. Minimize the ground path impedance for optimal performance of this device.
24	VDD	VDD	Supply	**Core Supply Voltage.** The device operates from a 1.8, 2.5, or 3.3 V supply. A 0.1 µF bypass capacitor should be located very close to this pin.
GND PAD	GND	GND	GND	**Ground Pad.** This is the large pad in the center of the package. Device specifications cannot be guaranteed unless the ground pad is properly connected to a ground plane on the PCB. See Table 19, “PCB Land Pattern,” on page 40 for ground via requirements.

8. Device Pinout by Part Number

The Si5338 is orderable in three different speed grades: Si5338A/D/G/K/N have a maximum output clock frequency limit of 710 MHz. Si5338B/E/H/L/P have a maximum output clock frequency of 350 MHz. Si5338C/F/J/M/Q have a maximum output clock frequency of 200 MHz.

Devices are also orderable according to the pin control functions available on Pins 3 and 4:

- **CLKIN**—single-ended clock input
- **I2C_LSB**—determines the LSB bit of the 7-bit I^2C address
- **FINC**—frequency increment pin
- **FDEC**—frequency decrement pin
- **PINC**—phase increment pin
- **PDEC**—phase decrement pin
- **FDBK**—single-ended feedback input
- **OEB**—output enable

Table 17. Pin Function by Part Number

Pin #	Si5338A: 710 MHz Si5338B: 350 MHz Si5338C: 200 MHz	Si5338D: 710 MHz Si5338E: 350 MHz Si5338F: 200 MHz	Si5338G: 710 MHz Si5338H: 350 MHz Si5338J: 200 MHz	Si5338K: 710 MHz Si5338L: 350 MHz Si5338M: 200 MHz	Si5338N: 710 MHz Si5338P: 350 MHz Si5338Q: 200 MHz
1	CLKIN[1]	CLKIN[1]	CLKIN[1]	CLKIN[1]	CLKIN[1]
2	CLKINB[1]	CLKINB[1]	CLKINB[1]	CLKINB[1]	CLKINB[1]
3	CLKIN[2]	PINC	FINC	OEB	CLKIN[2]
4	I2C_LSB	PDEC	FDEC	I2C_LSB	FDBK[3]
5	FDBK[4]	FDBK[4]	FDBK[4]	FDBK[4]	FDBK[4]
6	FDBKB[4]	FDBKB[4]	FDBKB[4]	FDBKB[4]	FDBKB[4]
7	VDD	VDD	VDD	VDD	VDD
8	INTR	INTR	INTR	INTR	INTR
9	CLK3B	CLK3B	CLK3B	CLK3B	CLK3B
10	CLK3A	CLK3A	CLK3A	CLK3A	CLK3A
11	VDDO3	VDDO3	VDDO3	VDDO3	VDDO3
12	SCL	SCL	SCL	SCL	SCL
13	CLK2B	CLK2B	CLK2B	CLK2B	CLK2B
14	CLK2A	CLK2A	CLK2A	CLK2A	CLK2A
15	VDDO2	VDDO2	VDDO2	VDDO2	VDDO2
16	VDDO1	VDDO1	VDDO1	VDDO1	VDDO1

Notes:
1. CLKIN/CLKINB on pins 1 and 2 are differential clock inputs or XTAL inputs.
2. CLKIN on pin 3 is a single-ended clock input.
3. FDBK on pin 4 is a single-ended feedback input.
4. FDBK/FDBKB on pins 5 and 6 are differential feedback inputs.

Table 17. Pin Function by Part Number (Continued)

Pin #	Si5338A: 710 MHz Si5338B: 350 MHz Si5338C: 200 MHz	Si5338D: 710 MHz Si5338E: 350 MHz Si5338F: 200 MHz	Si5338G: 710 MHz Si5338H: 350 MHz Si5338J: 200 MHz	Si5338K: 710 MHz Si5338L: 350 MHz Si5338M: 200 MHz	Si5338N: 710 MHz Si5338P: 350 MHz Si5338Q: 200 MHz
17	CLK1B	CLK1B	CLK1B	CLK1B	CLK1B
18	CLK1A	CLK1A	CLK1A	CLK1A	CLK1A
19	SDA	SDA	SDA	SDA	SDA
20	VDDO0	VDDO0	VDDO0	VDDO0	VDDO0
21	CLK0B	CLK0B	CLK0B	CLK0B	CLK0B
22	CLK0A	CLK0A	CLK0A	CLK0A	CLK0A
23	GND	GND	GND	GND	GND
24	VDD	VDD	VDD	VDD	VDD

Notes:
1. CLKIN/CLKINB on pins 1 and 2 are differential clock inputs or XTAL inputs.
2. CLKIN on pin 3 is a single-ended clock input.
3. FDBK on pin 4 is a single-ended feedback input.
4. FDBK/FDBKB on pins 5 and 6 are differential feedback inputs.

9. Package Outline: 24-Lead QFN

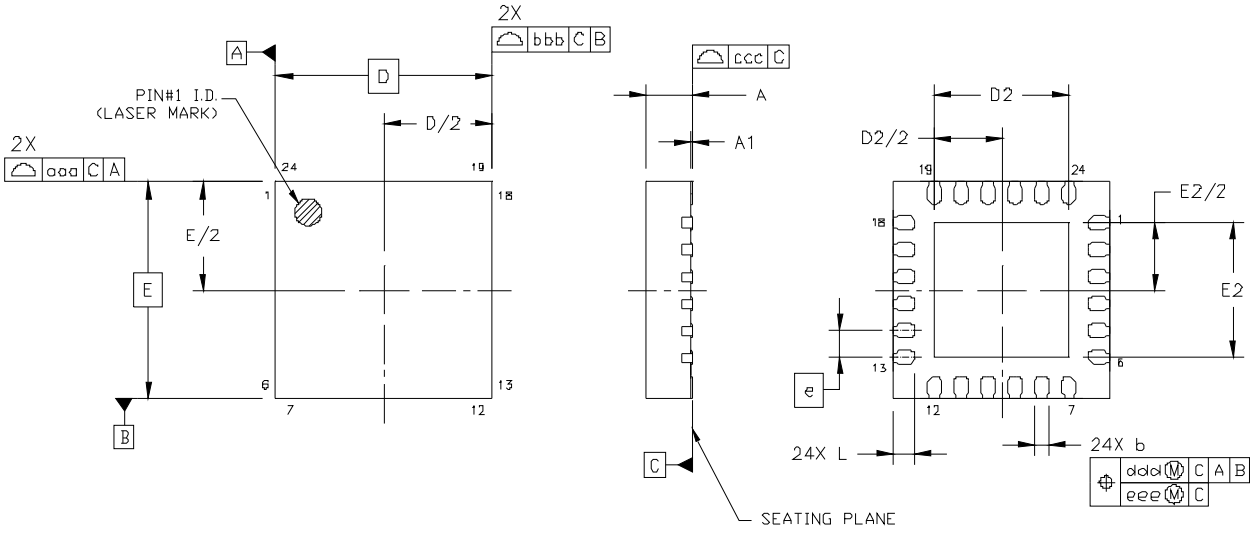

Figure 25. 24-Lead Quad Flat No-lead (QFN)

Table 18. Package Dimensions

Dimension	Min	Nom	Max
A	0.80	0.85	0.90
A1	0.00	0.02	0.05
b	0.18	0.25	0.30
D		4.00 BSC.	
D2	2.35	2.50	2.65
e		0.50 BSC.	
E		4.00 BSC.	
E2	2.35	2.50	2.65
L	0.30	0.40	0.50
aaa		0.10	
bbb		0.10	
ccc		0.08	
ddd		0.10	
eee		0.05	

Notes:

1. All dimensions shown are in millimeters (mm) unless otherwise noted.
2. Dimensioning and Tolerancing per ANSI Y14.5M-1994.
3. This drawing conforms to the JEDEC Outline MO-220, variation VGGD-8.
4. Recommended card reflow profile is per the JEDEC/IPC J-STD-020 specification for Small Body Components.

10. Recommended PCB Land Pattern

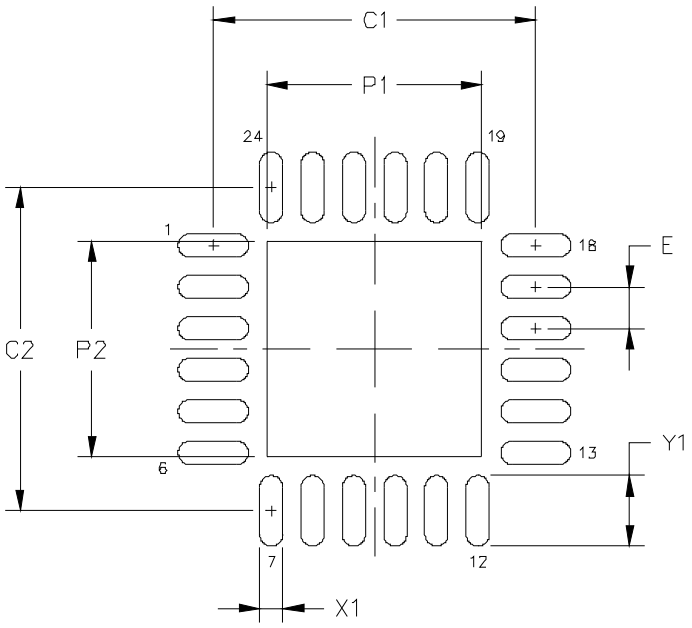

Table 19. PCB Land Pattern

Dimension	Min	Nom	Max
P1	2.50	2.55	2.60
P2	2.50	2.55	2.60
X1	0.20	0.25	0.30
Y1	0.75	0.80	0.85
C1	3.90		
C2	3.90		
E	0.50		

Notes:

General

1. All dimensions shown are in millimeters (mm) unless otherwise noted.
2. Dimensioning and Tolerancing per ANSI Y14.5M-1994 specification.
3. This Land Pattern Design is based on the IPC-7351 guidelines.
4. Connect the center ground pad to a ground plane with no less than five vias. These 5 vias should have a length of no more than 20 mils to the ground plane. Via drill size should be no smaller than 10 mils. A longer distance to the ground plane is allowed if more vias are used to keep the inductance from increasing.

Solder Mask Design

5. All metal pads are to be non-solder mask defined (NSMD). Clearance between the solder mask and the metal pad is to be 60 µm minimum, all the way around the pad.

Stencil Design

6. A stainless steel, laser-cut and electro-polished stencil with trapezoidal walls should be used to assure good solder paste release.
7. The stencil thickness should be 0.125 mm (5 mils).
8. The ratio of stencil aperture to land pad size should be 1:1 for all perimeter pins.
9. A 2x2 array of 1.0 mm square openings on 1.25 mm pitch should be used for the center ground pad.

Card Assembly

10. A No-Clean, Type-3 solder paste is recommended.
11. The recommended card reflow profile is per the JEDEC/IPC J-STD-020 specification for Small Body Components.

11. Top Marking

11.1. Si5338 Top Marking

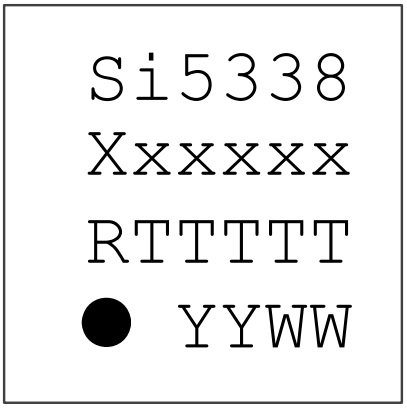

11.2. Top Marking Explanation

Table 20. Top Marking Explanation

Line	Characters	Description
Line 1	Si5338	Base part number.
Line 2	Xxxxxx	X = Frequency and configuration code. xxxxx = Optional NVM code for custom factory-programmed devices (characters are not included for blank devices). See "12. Ordering Information" on page 42.
Line 3	RTTTTT	R = Product revision. TTTTT = Manufacturing trace code.
Line 4	Circle with 0.5 mm diameter; left-justified	Pin 1 indicator.
	YYWW	YY = Year. WW = Work week. Characters correspond to the year and work week of package assembly.

12. Ordering Information

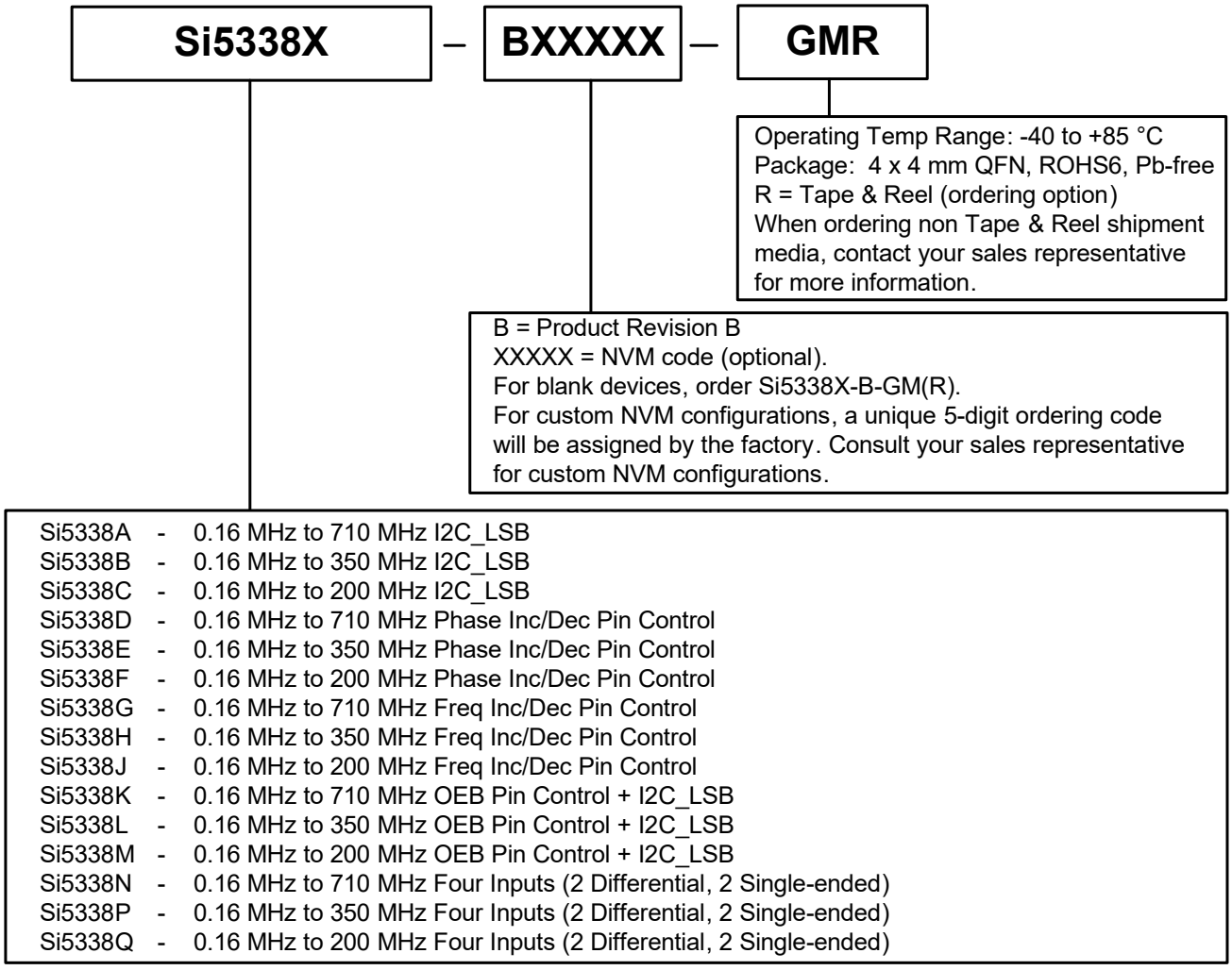

Evaluation Boards

Si5338 – EVB		Si5338 Evaluation Board
Si5338/56 – PROG - EVB		Si5338 Field Programmer

13. Device Errata

Please visit www.skyworksinc.com to access the device errata document.

Document Change List

Revision 0.2 to Revision 0.3

- Changed minimum output clock frequency from 5 MHz to 1 MHz.
- Updated slew rates.
- Updated " Features" on page 1.
- Updated Table 6, “Input and Output Clock Characteristics,” on page 8.
- Deleted Table 12, “Output Driver Slew Rate Control”.

Revision 0.3 to Revision 0.5

- Major editorial changes to all sections to improve clarity
- Completed electrical specification tables with final characterization results
- Revised the maximum input and output frequencies from 700 MHz to 710 MHz
- Improved jitter specifications to reflect updated characterization results
- Added new Si5338N/P/Q ordering codes
- Added typical application diagrams
- Added an application section to highlight the flexibility of the Si5338 in various timing functions
- Added a configuration section to clarify configuration options

Revision 0.5 to Revision 0.55

- Editorial changes to section 3.5 “Configuring the Si5338” to improve clarity on ordering custom Si5338 and on configuring “blank” Si5338.
- Added pin numbers to device package drawings.
- Updated ordering information to include evaluation boards.
- Updated first page description and applications
- Added θ_{JC} to specification tables.
- Added GbE RM jitter specification with 1.875–20 MHz integration band.

Revision 0.55 to Revision 0.6

- Changed output duty cycle to 45–55%.
- All I^2C address now in binary.
- Changed ordering information to reflect 710 MHz limit.
- Info on POR and soft reset added.
- Updated Figure 15 on page 28.
- Added register section.
- Update programming procedure in “3.5. Configuring the Si5338” to improve robustness.
- Updated Figure 9 to include the entire programming procedure.
- Added "3.2.1. Loss-of-Signal (LOS) Alarm Detectors" on page 19 to show the location of the LOS detector circuits.
- Updated input circuit diagrams in "3.2. Input Stage" on page 19.
- Update block diagrams with new input circuit diagrams.

Revision 0.6 to Revision 0.65

- Updated Figure 9, “I2C Programming Procedure,” on page 23 for consistency with register description.

Revision 0.65 to Revision 1.0

- Expanded PCI jitter specifications in Table 12.
- Moved “Si5338 Registers” section to AN411.
- Added I^2C data rate specifications to Table 15.
- Revised CMOS output currents down for each CMOS driver that is active in Table 3.
- Clarified CMOS output loads in Table 3
- Added peak reflow temperature and footnote in Table 2.
- Added sticky and mask register info in "3.6. Status Indicators" on page 24.
- Added more information to Table note about CMOS outputs and jitter in Table 12.
- Changed all reference of MultiSynth Mn to MSn
- Added "11. Top Marking" on page 41.
- Reworded 3.5.2 and 3.5.3 for clarity.

Revision 1.0 to Revision 1.1

- Replaced all references to AN411 with "Si5338 Reference Manual" (AN411 has been replaced by the Si5338 Reference Manual).
- Clarified crystal specifications in Tables 8, 9, 10, 11 and added references to AN360.

Revision 1.1 to Revision 1.2

- Updated Table 2 on page 4.
  - Added CML current consumption specification.
- Updated Table 6 on page 8.
  - Corrected t_R/t_F for output clocks (single-ended) from 1.7 ns (max) to 2.0 ns (max).
  - Added CML Output Voltage parameter.
- Updated Table 12 on page 13.
  - Updated typical specifications for total jitter for PCI Express 1.1 Common clocked topology.
  - Updated typical specifications for RMS jitter for PCI Express 2.1 Common clocked topology.
  - Removed RMS jitter specification for PCI Express 2.1

and 3.0 Data clocked topology.

- Added Table 13, “Jitter Specifications, Clock Buffer Mode (PLL Bypass)*,” on page 15.
  - Updated typical additive jitter (12 kHz–20 MHz) from 0.150 to 0.165 ps RMS.
- Updated Figure 9 on page 23 to provide work-around for spread spectrum errata.
- Removed "3.5.4. Modifying a MultiSynth Output Divider Ratio/Frequency Configuration". A soft reset is now recommended after any changes to the feedback or output dividers.
- Added " " on page 42.

Revision 1.2 to Revision 1.3

- Removed down spread spectrum errata that has been corrected in revision B.
- Updated ordering information to refer to revision B silicon.
- Updated top marking explanation in Table 20.
- Added further explanation to describe revision-specific behavior of center spread spectrum in section 3.10.7.

Revision 1.3 to Revision 1.4

- Added link to errata document.

Revision 1.4 to Revision 1.5

- Added setup and hold time specifications for I^2C in Table 15.

Revision 1.5 to Revision 1.6

- Updated Features on page 1.
- Updated Description on page 1.
- Updated specs in Table 12.

SKYWORKS®

ClockBuilder Pro

Customize Skyworks clock generators, jitter attenuators and network synchronizers with a single tool. With CBPro you can control evaluation boards, access documentation, request a custom part number, export for in-system programming and more!

www.skyworksinc.com/CBPro



Portfolio
www.skyworksinc.com/ia/timing

SW/HW
www.skyworksinc.com/CBPro

Quality
www.skyworksinc.com/quality

Support & Resources
www.skyworksinc.com/support

Copyright © 2021 Skyworks Solutions, Inc. All Rights Reserved.

Information in this document is provided in connection with Skyworks Solutions, Inc. ("Skyworks") products or services. These materials, including the information contained herein, are provided by Skyworks as a service to its customers and may be used for informational purposes only by the customer. Skyworks assumes no responsibility for errors or omissions in these materials or the information contained herein. Skyworks may change its documentation, products, services, specifications or product descriptions at any time, without notice. Skyworks makes no commitment to update the materials or information and shall have no responsibility whatsoever for conflicts, incompatibilities, or other difficulties arising from any future changes.

No license, whether express, implied, by estoppel or otherwise, is granted to any intellectual property rights by this document. Skyworks assumes no liability for any materials, products or information provided hereunder, including the sale, distribution, reproduction or use of Skyworks products, information or materials, except as may be provided in Skyworks' Terms and Conditions of Sale.

THE MATERIALS, PRODUCTS AND INFORMATION ARE PROVIDED "AS IS" WITHOUT WARRANTY OF ANY KIND, WHETHER EXPRESS, IMPLIED, STATUTORY, OR OTHERWISE, INCLUDING FITNESS FOR A PARTICULAR PURPOSE OR USE, MERCHANTABILITY, PERFORMANCE, QUALITY OR NON-INFRINGEMENT OF ANY INTELLECTUAL PROPERTY RIGHT; ALL SUCH WARRANTIES ARE HEREBY EXPRESSLY DISCLAIMED. SKYWORKS DOES NOT WARRANT THE ACCURACY OR COMPLETENESS OF THE INFORMATION, TEXT, GRAPHICS OR OTHER ITEMS CONTAINED WITHIN THESE MATERIALS. SKYWORKS SHALL NOT BE LIABLE FOR ANY DAMAGES, INCLUDING BUT NOT LIMITED TO ANY SPECIAL, INDIRECT, INCIDENTAL, STATUTORY, OR CONSEQUENTIAL DAMAGES, INCLUDING WITHOUT LIMITATION, LOST REVENUES OR LOST PROFITS THAT MAY RESULT FROM THE USE OF THE MATERIALS OR INFORMATION, WHETHER OR NOT THE RECIPIENT OF MATERIALS HAS BEEN ADVISED OF THE POSSIBILITY OF SUCH DAMAGE.

Skyworks products are not intended for use in medical, lifesaving or life-sustaining applications, or other equipment in which the failure of the Skyworks products could lead to personal injury, death, physical or environmental damage. Skyworks customers using or selling Skyworks products for use in such applications do so at their own risk and agree to fully indemnify Skyworks for any damages resulting from such improper use or sale.

Customers are responsible for their products and applications using Skyworks products, which may deviate from published specifications as a result of design defects, errors, or operation of products outside of published parameters or design specifications. Customers should include design and operating safeguards to minimize these and other risks. Skyworks assumes no liability for applications assistance, customer product design, or damage to any equipment resulting from the use of Skyworks products outside of Skyworks' published specifications or parameters.

Skyworks, the Skyworks symbol, Sky5®, SkyOne®, SkyBlue™, Skyworks Green™, Clockbuilder®, DSPLL®, ISOmodem®, ProSLIC®, and SiPHY® are trademarks or registered trademarks of Skyworks Solutions, Inc. or its subsidiaries in the United States and other countries. Third-party brands and names are for identification purposes only and are the property of their respective owners. Additional information, including relevant terms and conditions, posted at www.skyworksinc.com, are incorporated by reference.

Skyworks Solutions, Inc. | Nasdaq: SWKS | sales@skyworksinc.com | www.skyworksinc.com
USA: 781-376-3000 | Asia: 886-2-2735 0399 | Europe: 33 (0)1 43548540 |