DATA SHEET

Si82520/Si82521 4.0 A Symmetric Drive ISODrivers with 20 V VDDIH, Low Propagation Delay, and High Transient Immunity

The Si8252x combines two isolated drivers into a single package for high power applications. These drivers can operate with a 4.5 V to 20 V input VDD and a maximum drive supply voltage of 30 V.

The Si8252x is ideal for driving power MOSFETs and IGBTs used in a wide variety of switched power and motor control applications. These drivers utilize Skyworks' proprietary silicon isolation technology, supporting up to 5 kV_{RMS} for one minute isolation voltage. This technology enables high CMTI (125 kV/µs), lower prop delays and skew, reduced variation with temperature and age and tighter part-to-part matching.

The unique architecture of the output stage features a booster device that provides a higher pull up capability at the Miller plateau region of the load power switch to support faster turn-on times. This driver family also offers some unique features such as over-temperature protection, output UVLO fault detection, dead time programmability and fail-safe drivers with default low in case of loss of input side power. The Si8252x family offers longer service life and dramatically higher reliability compared to opto-coupled gate drivers.

Automotive Grade is available. These products are built using automotive specific flows at all steps in the manufacturing process to ensure the robustness and low defectivity required for automotive applications.

Industrial Applications

- Power delivery systems
- Motor control systems
- Isolated dc-dc power supplies
- Lighting control systems
- Solar and industrial inverters

Automotive Applications

- On-board chargers
- Battery management systems
- Charging stations
- Traction inverters
- Hybrid Electric Vehicles
- Battery Electric Vehicles

Safety Approval

- UL 1577 recognized
  - Up to 5000 V_{RMS} for 1 minute
- CSA certification conformity
  - 62368-1 (reinforced insulation)
- VDE certification conformity
  - 62368-1 (reinforced insulation)
- CQC certification approval
  - GB4943.1-2011

Key Features

- Two isolated drivers in one package
  - Up to 5 kVRMS isolation
  - Up to 1500 VDC peak driver-to-driver differential voltage
- EN pin for enhanced safety or DIS pin option
- Extended VDDIH
  - 4.5 V to 20 V
- 4.0 A sink/source peak output
- High electromagnetic immunity
- 30 ns max propagation delay
- Transient immunity: >125 kV/ìs
- Programmable dead time
  - 40 to 600 ns
- Wide operating range
  - –40 to +125 °C
- RoHS-compliant packages
  - WB SOIC-14
- AEC-Q100 qualified
- Automotive-grade OPNs available
  - AIAG-compliant PPAP documentation support
  - IMDS and CAMDS listing support

Skyworks Green™ products are compliant with all applicable legislation and are halogen-free. For additional information, refer to *Skyworks Definition of Green™*, document number SQ04–0074.

1. Pin Descriptions

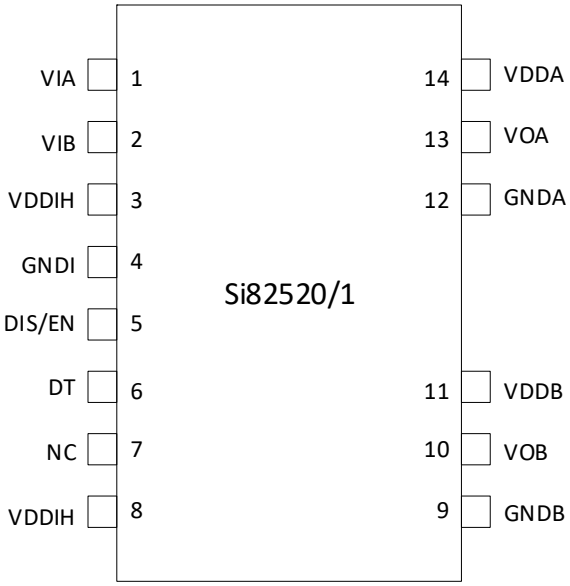

Figure 1. Si82520/1 WB SOIC-14

Table 1. Pin Descriptions

Pin Name	Description
VIA	Non-inverting logic input terminal for Driver A.
VIB	Non-inverting logic input terminal for Driver B.
VDDIH	High Voltage Input-side power supply terminal.
GNDI	Input-side ground terminal.
EN	Device ENABLE. When asserted, this input enables normal operation of the device. When low or NC, this input unconditionally drives outputs VOA, VOB LOW. When high, device is enabled to perform in normal operating mode. It is strongly recommended that this input be connected to external logic level to avoid erroneous operation due to capacitive noise coupling.
DIS	Device DISABLE. When asserted, this input unconditionally drives outputs VOA, VOB LOW. When low or open, device is enabled to perform in normal operating mode. It is strongly recommended that this input be connected to external logic level to avoid erroneous operation due to capacitive noise coupling.
DT	Dead time programming input. The value of the resistor connected from DT to ground sets the dead time between output transitions of VOA and VOB.
NC	No connection.
GNDB	Ground terminal for Driver B.
VOB	Driver B output (low-side driver).
VDDB	Driver B power supply voltage terminal; connect to a source.
GNDA	Ground terminal for Driver A.
VOA	Driver A output (high-side driver)
VDDA	Driver A power supply voltage terminal; connect to a source.

2. System Overview

2.1. Functional Description

The operation of an Si8252x channel is analogous to that of an optocoupler and gate driver, except an RF carrier is modulated instead of light. This simple architecture provides a robust isolated data path and requires no special considerations or initialization at start-up. A simplified block diagram for a single Si8252x channel is shown in Figure 2 below.

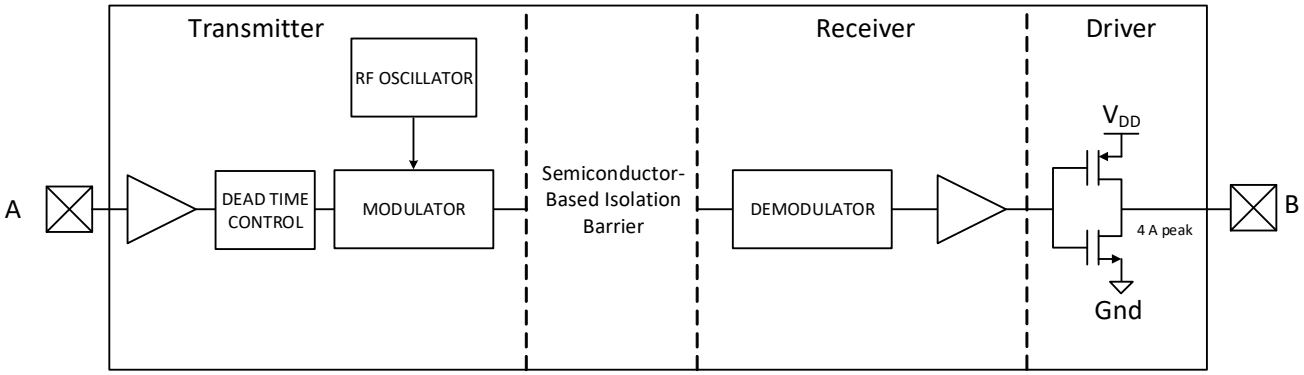

Figure 2. Simplified Channel Diagram

A channel consists of an RF Transmitter and RF Receiver separated by a semiconductor based isolation barrier. Referring to the Transmitter, input A modulates the carrier provided by an RF oscillator using on/off keying. The Receiver contains a demodulator that decodes the input state according to its RF energy content and applies the result to output B via the output driver. This RF on/off keying scheme is superior to pulse code schemes as it provides best-in-class noise immunity, low power consumption, and better immunity to magnetic fields. See Figure 3 below for more details.

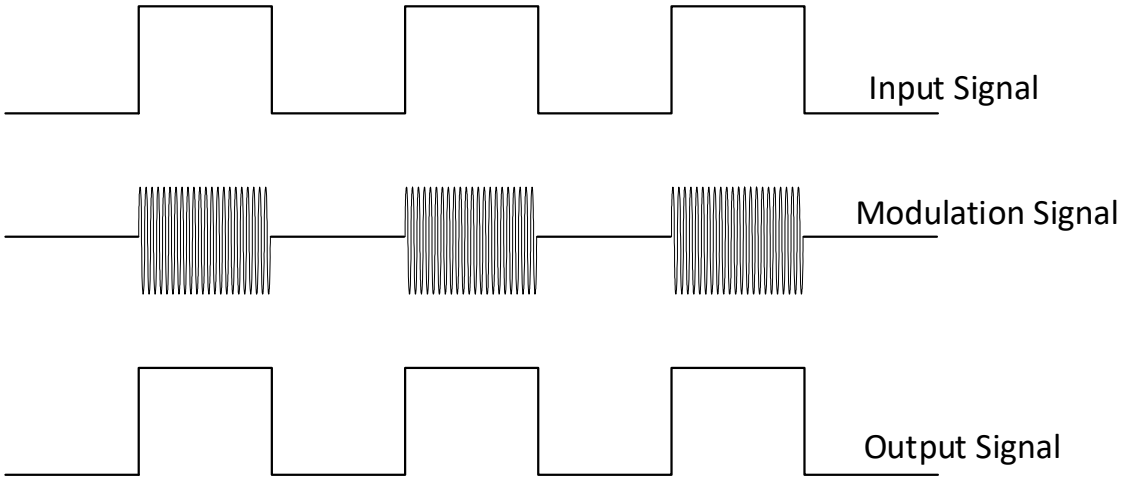

Figure 3. Modulation Scheme

2.2. Family Overview and Logic Operation During Startup

The Si8252x family of isolated drivers are high-side/low-side drivers.

2.2.1. Device Behavior

The following are truth tables for the Si8252x families.

Table 2. Si8252xTruth Table

VIA	VIB	DIS / EN[1]	VDDIH[2]	VDDA[2]	VDDB[2]	VOA	VOB	Notes
H	L	L / H	P	P	P	H	L	
L	H	L / H	P	P	P	L	H	
H	H	L / H	P	P	P	L	L	
L	L	L / H	P	P	P	L	L	
X	X	H / L or NC	P	P	P	L	L	Device disabled
X	X	X	UP[3]	P	P	L	L	Fail-safe output when VDDIH unpowered
H	X	L / H	P	P	UP	H	UD[4]	VOB depends on VDDB state
L	X	L / H	P	P	UP	L	UD[4]	
X	H	L / H	P	UP	P	UD[4]	H	VOA depends on VDDA state
X	L	L / H	P	UP	P	UD[4]	L	

1. There are different product options available. For any one product, either EN or DIS is present.
2. P = Powered, UP = Unpowered
3. The chip can be powered through the VIA,VIB input ESD diodes even if VDDIH is unpowered. It is recommended that inputs be left unpowered when VDDIH is unpowered.
4. UD = undetermined if same side power is UP.

2.3. Layout Considerations

It is most important to minimize ringing in the drive path and noise on the Si8252x VDD lines. Care must be taken to minimize parasitic inductance in these paths by locating the Si8252x as close to the device it is driving as possible. In addition, the VDD supply and ground trace paths must be kept short. For this reason, the use of power and ground planes is highly recommended. A split ground plane system having separate ground and VDD planes for power devices and small signal components provides the best overall noise performance. For placement of the decoupling capacitors, it is recommended that the 0.1 µf capacitor should be placed as close as possible to the VDDA/B supply pins. The 10 µf capacitor can be a little farther away.

2.4. Undervoltage Lockout Operation

Device behavior during start-up, normal operation and shutdown is shown in “2.4.2. Undervoltage Lockout” on page 5, where UVLO+ and UVLO- are the positive-going and negative-going thresholds respectively. Note that outputs VOA and VOB default low when input side power supply (VDDIH) is not present.

2.4.1. Device Startup

Outputs VOA and VOB are held low during power-up until VDD is above the UVLO threshold for time period t_{START}. Following this, the outputs follow the states of inputs VIA and VIB.

2.4.2. Undervoltage Lockout

Undervoltage Lockout (UVLO) is provided to prevent erroneous operation during device startup and shutdown or when VDD is below its specified operating circuits range. The input (control) side, Driver A and Driver B, each have their own undervoltage lockout monitors.

The Si8252x input side enters UVLO when VDDIH ≤ $VDDIH_{UV-}$, and exits UVLO when VDDIH > $VDDIH_{UV+}$. The driver outputs, VOA and VOB, remain low when the input side of the Si8252xis in UVLO and their respective VDD supply (VDDA, VDDB) is within tolerance. Each driver output can enter or exit UVLO independently. For example, VOA unconditionally enters UVLO when VDDA falls below $VDDA_{UV-}$ and exits UVLO when VDDA rises above $VDDA_{UV+}$.

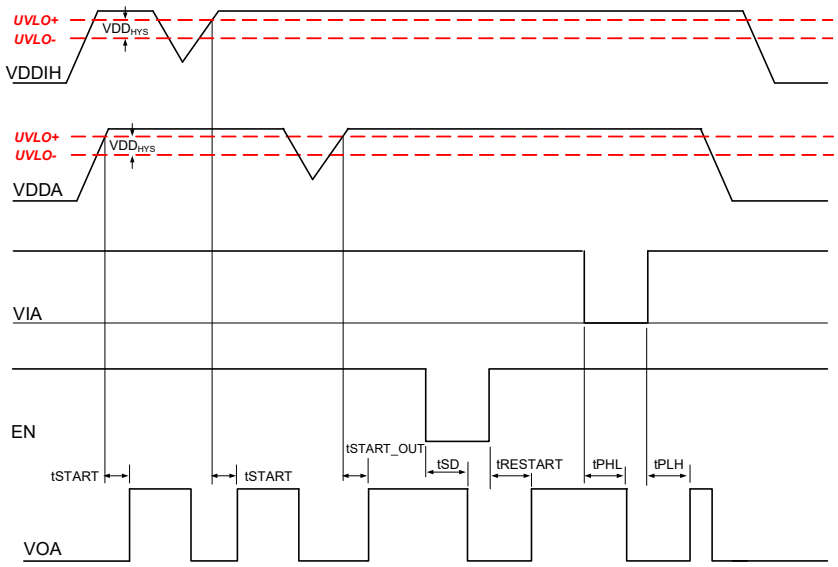

Figure 4. Si82521 Device Behavior During Normal Operation and Shutdown

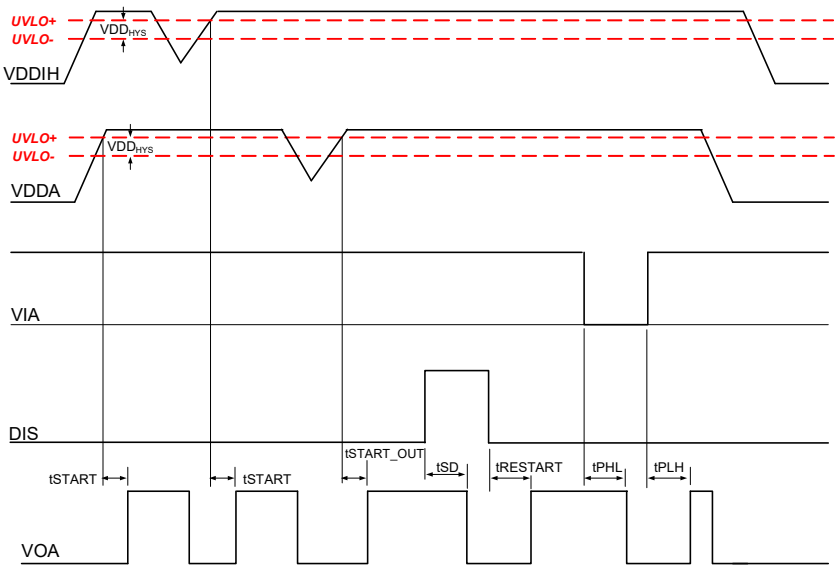

Figure 5. Si82520 Device Behavior During Normal Operation and Shutdown

2.5. Control Inputs

VIA and VIB inputs are high-true, TTL level-compatible logic inputs. A logic high signal on VIA or VIB causes the corresponding output to go high.

2.6. Enable Input

When brought low, the EN input unconditionally drives VOA and VOB low regardless of the states of VIA and VIB. Device operation terminates within t_{SD} after EN = VIL and resumes within tRESTART after EN = VIH. The EN input has no effect if VDDIH is below its UVLO level (i.e., VOA, VOB remain low). There is an internal pull-down resistor of 100 kΩ on the EN pin.

2.7. Disable Input

When brought high, the DISABLE input unconditionally drives VOA and VOB low regardless of the states of VIA and VIB. (For the Si823H9Tx, when brought high, the DISABLE input unconditionally drives VO low regardless of the state of VI.) Device operation terminates within tSD after DISABLE =VIH and resumes within tRESTART after DISABLE = VIL or open. The DISABLE input has no effect if VDDIH is below its UVLO level (i.e., VOA, VOB remain low). There is an internal pull-down resistor of 100 kΩ on the DIS pin.

2.8. Programmable Dead Time and Overlap Protection

These high-side/low-side drivers include programmable dead time, which adds a user-programmable delay between transitions of VOA and VOB. When asserted, dead time is present only on output rising edges, when the other input is also high. If only one input is high, there is no dead time added to the output transition. Please see Figure 6 below for a graphical representation of dead time implementation. The amount of dead time delay (DT) is programmed by a single resistor (RDT) connected from the DT input to ground per the equation below. The DT is measured as the time elapsed between VOA low to VOB high and vice versa.

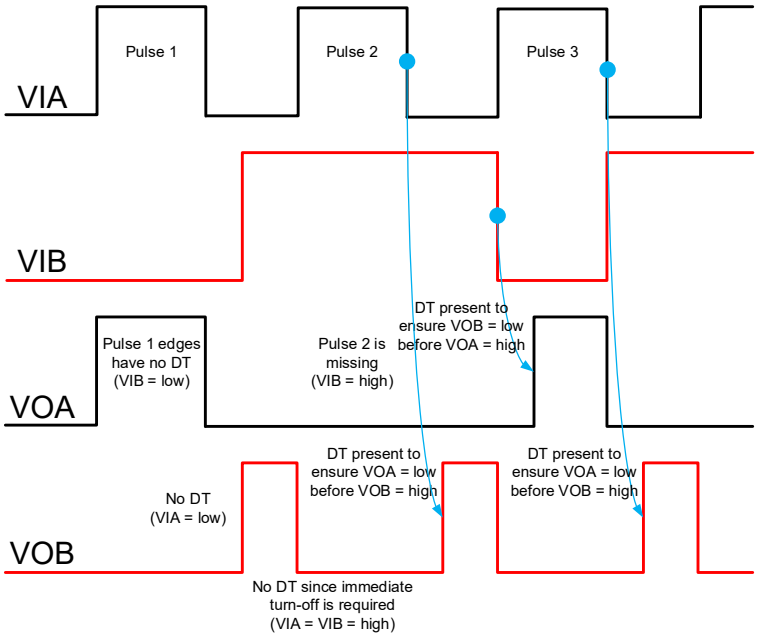

Figure 6. Dead Time Implementation and Behavior

DT ~ 5.4 x (RDT) + 14, where DT = Typical Dead Time in ns, RDT = Dead Time Resistor in kΩ

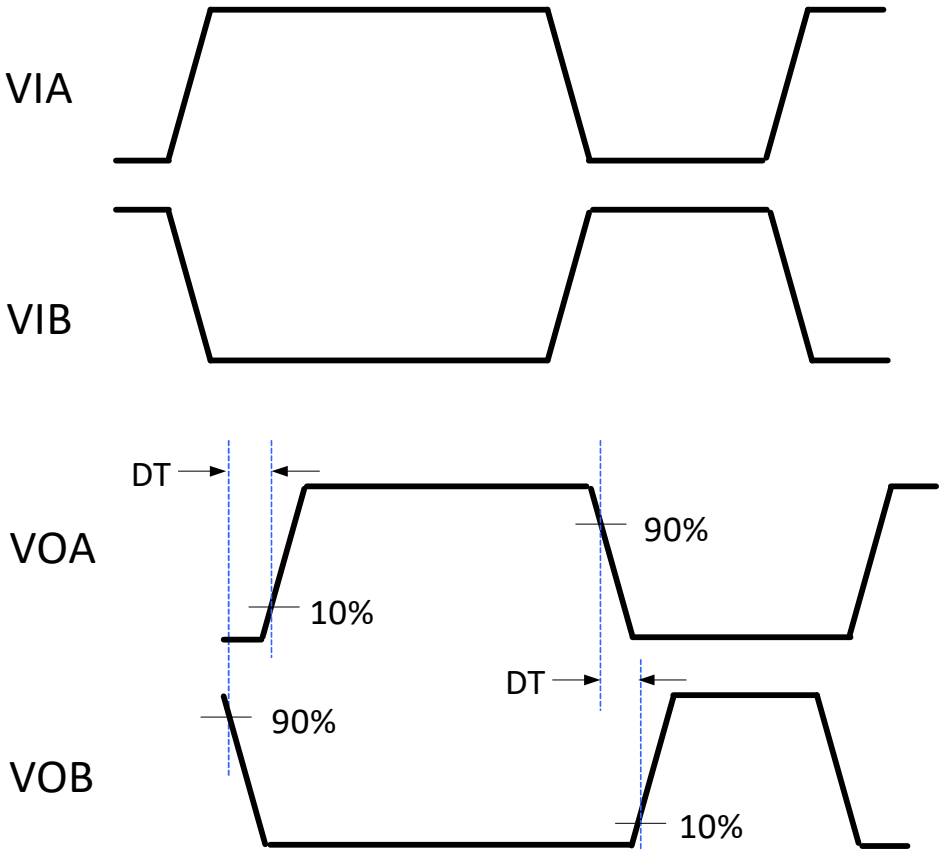

Figure 7. Dead Time Waveforms for High-Side/Low-Side Drivers

2.9. Thermal Protection

Si8252x has built-in temperature sensors for protection against high temperature resulting from overloading the driver, too high of an ambient temperature, or external component failures. If high internal temperature (>150 °C) is detected, the output is forced to low state.

2.10. Driver Output Booster Function

The output driver pull-up capability is enabled by two parallel drivers: a standard PMOS device and an NMOS helper transistor. The PMOS device provides a standard 1 A pull-up and the DC pull-up when VO is close to VDD. The NMOS helper provides higher pull-up currents around the miller plateau of the driven power transistor, supporting fast turn-on times. See Figure 8 below for the internal architecture scheme and Figure 9 for the pull-up current characteristics.

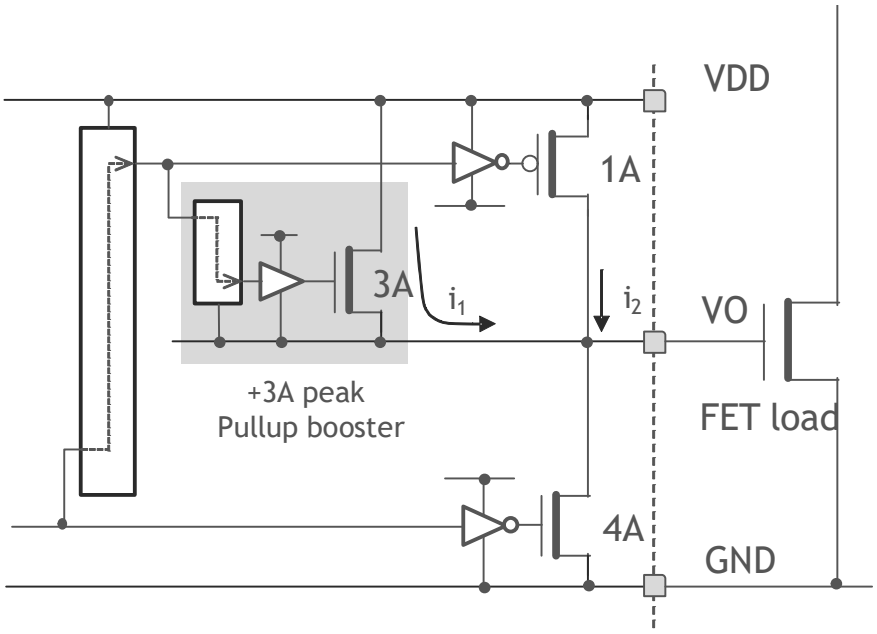

Figure 8. Pull-Up Booster Simplified Architecture

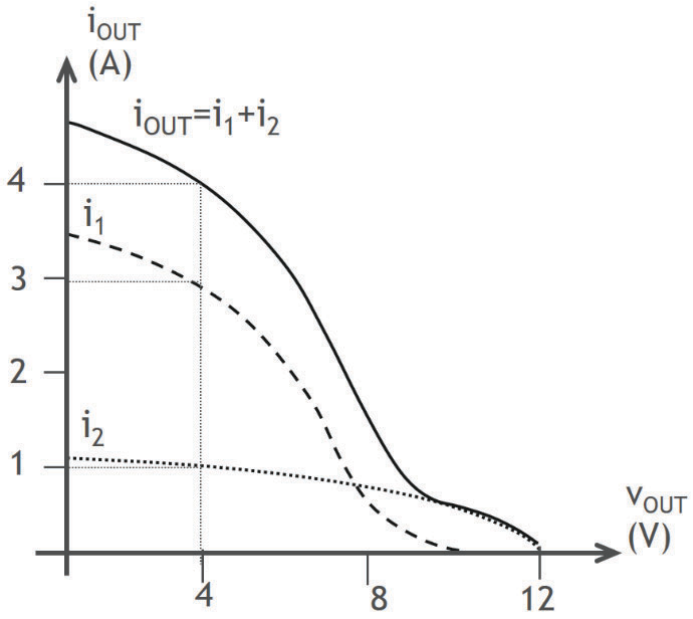

Figure 9. Pull-Up Current Characteristics, VDD = 12 V

3. Applications

The following examples illustrate typical circuit configurations using the Si8252x.

3.1. HS/LS Driver

Figure 10 shows the device configured as a HS/LS driver. Note that the drain voltages of Q1 and Q2 can be referenced to a common ground or to different grounds with as much as 1500 Vdc between them.

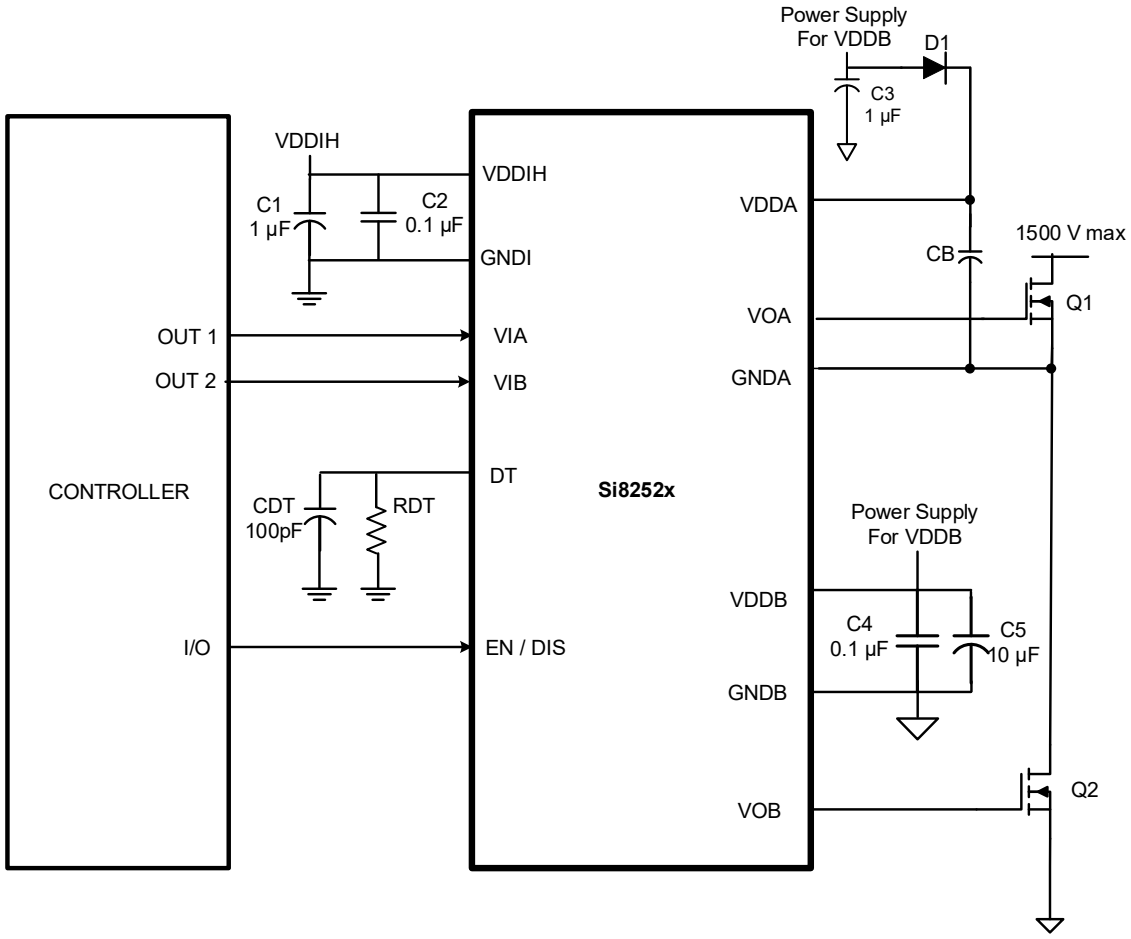

Figure 10. Si8252x with EN/DIS Pin Application Diagram

Because each output driver resides on its own die, the relative voltage polarities of VOA and VOB can reverse without damaging the driver.

In the above figure, D1 and CB form a conventional bootstrap circuit that allows VOA to operate as a high-side driver for Q1, which has a maximum drain voltage of 1500 V. VOB is connected as a conventional low-side driver. Note that the input side of the Si8252xrequires VDDIH in the range of 4.5 to 20.0 V, while the VDDA and VDDB output side supplies must be between 5.5 and 30 V referred to their respective grounds. The boot-strap start up time will depend on the CB cap chosen. Also note that the bypass capacitors on the Si8252x should be located as close to the chip as possible.

4. Electrical Characteristics

Table 3. Absolute Maximum Ratings[1]

Parameter	Symbol	Min	Max	Unit
Ambient Temperature under Bias	TA	–40	+125	°C
Storage Temperature	TSTG	–65	+150	°C
Junction Temperature	TJ	—	+150	°C
Input-side Supply Voltage	VVDIH	–0.6	24	V
Driver-side Supply Voltage	VDDA, VDDB	–0.6	36	V
Voltage on any Pin with respect to Ground	VIA, VIB Transient for 50 ns	–5.0	VDD + 0.5	V
	VIA, VIB, EN, DIS,DT	-0.6	VDD + 0.5	
Peak Output Current (t_{PW} = 10 µs, duty cycle = 0.2%)	IOPK	—	6.0	A
Lead Solder Temperature (10 s)		—	260	°C
ESD per AEC-Q100	HBM	—	4	kV
	CDM (EN/DIS pin only)	—	0.25	kV
	CDM (all other pins)	—	0.5	kV

1. Permanent device damage may occur if the absolute maximum ratings are exceeded. Functional operation should be restricted to the conditions as specified in the operational sections of this data sheet. Exposure to absolute maximum rating conditions for ex- tended periods may affect device reliability.

Table 4. Electrical Characteristics[1,2]

Parameter	Symbol	Test Condition	Min	Typ	Max	Unit
DC Specifications						
Input-side Power Supply Voltage	VDDIH		4.5		20	V
Driver Supply Voltage	VDDA, VDDB	Voltage between VDDA andGNDA, and VDDB and GNDB	5.5	—	30	V
Input Supply Quiescent Current EN = 0 or DIS = 1	IDDI(Q)		—	1.3	2.0	mA
Input Supply Active Current (with one channel active)	IDDI	freq = 1 MHz	—	2.2	3.3	mA
Input Supply Active Current (with both channels active)	IDDI	freq = 1 MHz	—	3.6	4.75	mA
Output Supply Quiescent Current, per channel EN = 0 or DIS = 1	IDDA(Q), IDDB(Q)		—	2.3	2.8	mA
Output Supply Active Current, per channel	IDDA/B	Input freq = 1 MHz, no load	—	5.6	9.0	mA
Input Pin Leakage Current, VIA, VIB	IVIA, IVIB		–10	—	+10	µA
Input Pin Leakage Current, EN, DIS	IENABLE, IDISABLE		–40	—	+40	µA
Logic High Input Threshold	VIH	TTL Levels	1.6	1.8	2.0	V
Logic Low Input Threshold	VIL	TTL Levels	0.8	1	1.2	V
Input Hysteresis	VIHYST			800	—	mV
Logic High Output Voltage	VOAH, VOBH	IOA, IOB = –1 mA	VDDA, VDDB – 0.064	—	—	V

Table 4. Electrical Characteristics[1,2] (Continued)

Parameter	Symbol	Test Condition	Min	Typ	Max	Unit
Logic Low Output Voltage	VOAL, VOBL	IOA, IOB = 1 mA	—	—	0.04	V
Output Short-Circuit Pulsed Source Current	IOA(SCL), IOB(SCL)	CL = 220 nF	—	4.0	—	A
Output Short-Circuit Pulsed Source Current	IOA(SCH), IOB(SCH)	CL = 220 nF	—	4.0	—	A
Output Sink Resistance	$R_{ON(SINK)}$		—	1.0	—	Ω
Output Source Resistance	$R_{ON(SOURCE)}$		—	4.2	—	Ω
VDDIH Undervoltage Threshold	$VDDI_{HUV+}$	VDDIH rising	3.2	3.7	4.4	V
VDDIH Undervoltage Threshold	$VDDI_{HUV–}$	VDDIH falling	2.7	3.55	4.0	V
VDDIH Lockout Hysteresis	$VDDIH_{HYS}$		70	500	—	mV
VDDA, VDDB Undervoltage Threshold 5 V Threshold 8 V Threshold 12 V Threshold	$VDDA_{UV+}$, $VDDB_{UV+}$	VDDA, VDDB rising	 4.5 7.5 11.3	 4.9 8.1 12.2	 5.3 8.8 13.4	V
VDDA, VDDB Undervoltage Threshold 5 V Threshold 8 V Threshold 12 V Threshold	$VDDA_{UV–}$, $VDDB_{UV–}$	VDDA, VDDB falling	 4.3 7.0 10.3	 4.7 7.6 11.1	 5.0 8.2 12.0	V
VDDA, VDDB Lockout Hysteresis	$VDDA_{HYS}$, $VDDB_{HYS}$	UVLO = 5 V UVLO = 8 V UVLO = 12 V	150 450 950	220 550 1200	— — —	mV
AC Specifications						
Minimum Pulse Width (No load)	PW_{min}		—	30	—	ns
Propagation Delay VDDA/B = 12 V CL = 0 pF	t_{pHL}, t_{pLH}		10	19	30	ns
Output Channel to Channel Skew	t_{PSK}			3	5	ns
Propagation Delay Skew[3]	$t_{PSK(P-P)}$		—	—	10	ns
Pulse Width Distortion $\lvert t_{PLH} - t_{PHL} \rvert$	PWD	VDDA/B = 12 V CL = 0 pF	—	2.7	5.60	ns
Programmed Dead Time	DT	RDT = 6 kΩ	30	40	50	ns
		RDT = 15 kΩ	65	82	98	
		RDT = 100 kΩ	375	450	530	
Output Rise and Fall Time	t_R,t_F	CL = 200 pF	—	—	12	ns
Shutdown Time from ENable False (or DISable true)	t_{SD}		—	—	35	ns
Restart Time from ENable True (or DISable false)	$t_{RESTART}$		—	—	35	ns
Device Start-up Time Input	t_{START}	Time from VDDIH_ = VDDIH_UV+ to VOA, VOB = VIA, VIB	—	40	—	µs
Device Start-up Time Output	t_{START_OUT}	Time from VDDA/B = VDDA/B_UV+ to VOA, VOB = VIA, VIB	—	60	—	µs
Common Mode Transient Immunity	CMTI	VIA, VIB = VDDIH or 0 V VCM = 1500 V	125	—	—	kV/µs

1. 4.5 V < VDDIH < 20 V; 5.5 V < VDDA, VDDB < 30 V; TA = –40 to +125 °C.
2. Typical specs at 25 °C, VDDA = VDDB = 12 V for 5 V and 8 V UVLO devices, otherwise 15 V.
3. tPSK(P-P) is the magnitude of the difference in propagation delay times measured between different units operating at the same supply voltages, load, and ambient temperature.

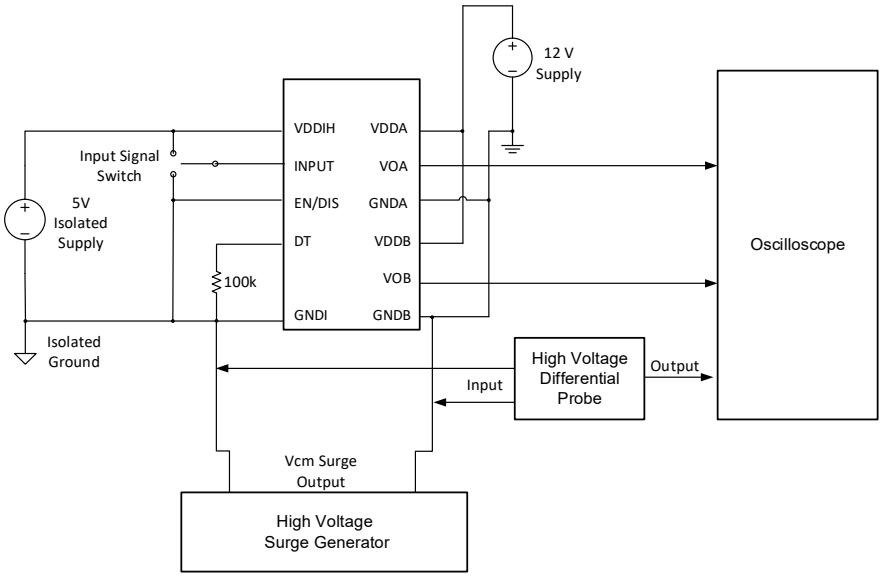

Figure 11. Common Mode Transient Immunity (CMTI) Test Circuit

Table 5. Regulatory Information (Pending)[1,2,3,4]

CSA
The Si8252x is certified under CSA, see Master Contract Number 232873.
62368-1: Up to 600 V_{RMS} reinforced insulation working voltage; up to 1000 V_{RMS} basic insulation working voltage.
VDE
The Si8252x is certified under VDE. For more details, see File 5006301.
62368-1: Up to 600 V_{RMS} reinforced insulation working voltage; up to 1000 V_{RMS} basic insulation working voltage.
UL
The Si8252x is certified under UL1577 component recognition program. For more details, see File E257455.
Rated up to 5000 V_{RMS} isolation voltage for basic protection.
CQC
The Si8252x is certified under GB4943.1-2011.
Rated up to 250 V_{RMS} reinforced insulation working voltage at 5000 meters.

1. Regulatory Certifications apply to 2.5 kV_{RMS} rated devices which are production tested to 3.0 kV_{RMS} for 1 s.
2. Regulatory Certifications apply to 3.75 kV_{RMS} rated devices which are production tested to 4.5 kV_{RMS} for 1 s.
3. Regulatory Certifications apply to 5.0 kV_{RMS} rated devices which are production tested to 6.0 kVRMS for 1sec.
4. For more information, see “9. Ordering Guide” on page 21.

Table 6. Insulation and Safety-Related Specifications

Parameter	Symbol	Test Condition	Value	Unit
			WB SOIC-14 5 kV_{RMS}	
Nominal External Air Gap (Clearance)[1]	CLR		8.0	mm
Nominal External Tracking (Creepage)[1]	CRP		8.0	mm
Minimum Internal Gap (Internal Clearance)	DTI		0.016	mm
Tracking Resistance	CTI or PTI	IEC60112	600	V
Erosion Depth	ED		0.019	mm
Resistance (Input-Output)[2]	R_{IO}		10^{12}	Ω
Capacitance (Input-Output)[2]	C_{IO}	f = 1 MHz	1.7	pF
Input Capacitance[3]	C_I		3.0	pF

1. The values in this table correspond to the nominal creepage and clearance values.
2. To determine resistance and capacitance, the device is converted into a two-terminal device. All pins on Side 1 and all pins on Side 2 are shorted.
3. Measured from input pin to ground.

Table 7. IEC 60664-1 Ratings

Parameter	Test Condition	Specification
		WB SOIC-14
Basic Isolation Group	Material Group	I
Installation Classification (Overvoltage Category)	Rated Mains Voltages < 150 V_{RMS}	I-IV
	Rated Mains Voltages < 300 V_{RMS}	I-IV
	Rated Mains Voltages < 400 V_{RMS}	I-IV
	Rated Mains Voltages < 600 V_{RMS}	I-IV

Table 8. Thermal Characteristics

Parameter	Symbol	WB SOIC-14	Unit
IC Junction-to-Air Thermal Resistance	θ_{JA}	59	°C/W

4.1. Typical Operating Characteristics

The typical performance characteristics depicted in this subsection are for information purposes only. Refer to "4. Electrical Characteristics" on page 10 for actual specification limits.

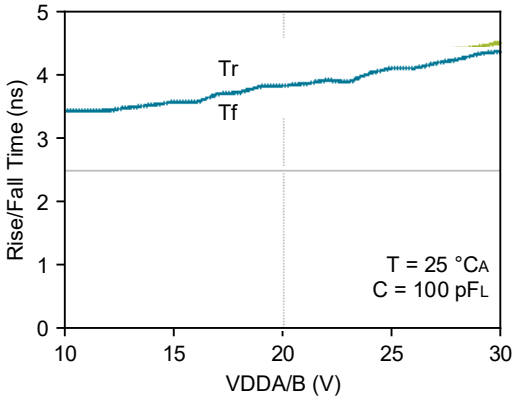

Figure 12. Rise/Fall Time vs. Supply Voltage

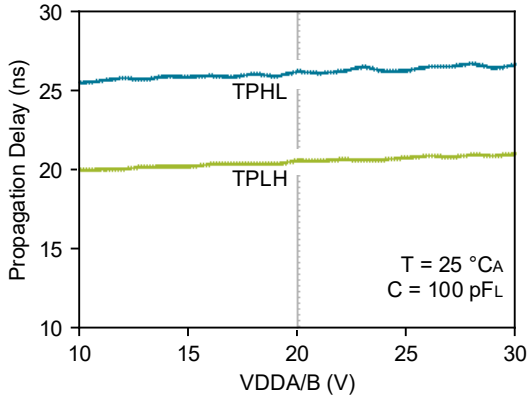

Figure 13. Propagation Delay vs. Supply Voltage

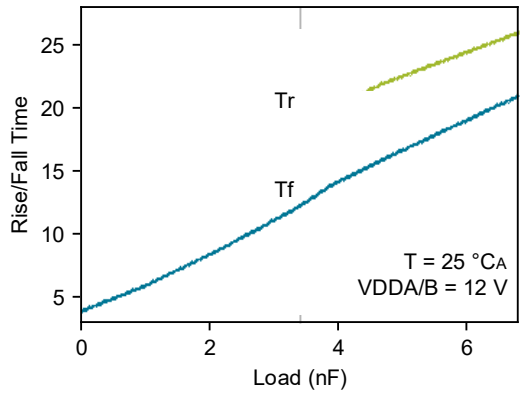

Figure 14. Rise/Fall Time vs. Load

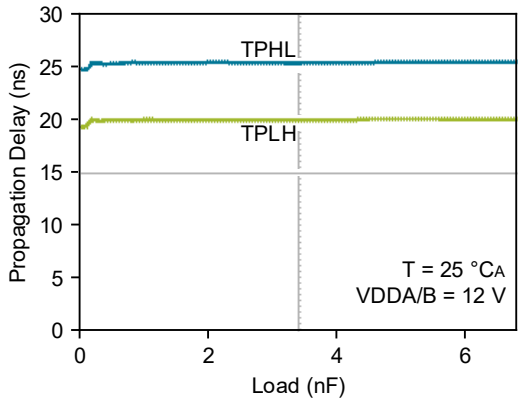

Figure 15. Propagation Delay vs. Load

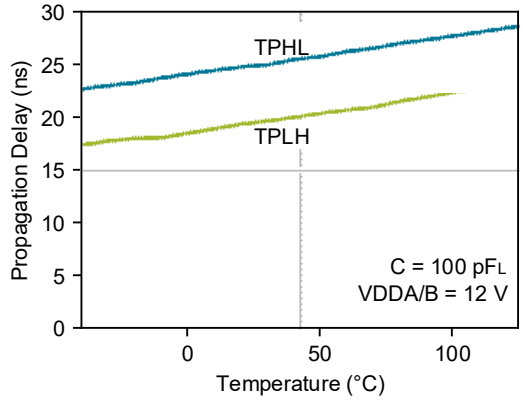

Figure 16. Propagation Delay vs. Temperature

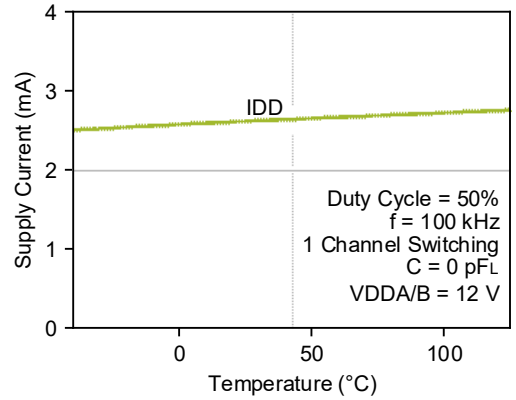

Figure 17. Supply Current vs. Temperature

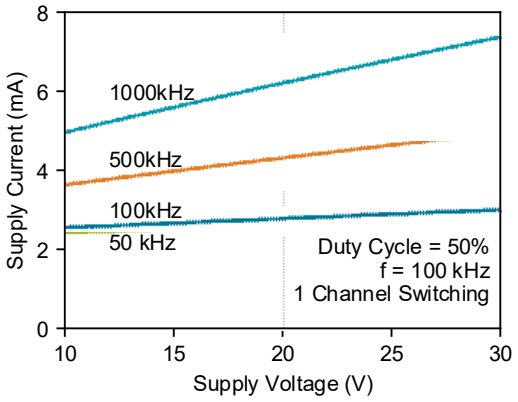

Figure 18. Supply Current vs. Supply Voltage (C_L = 0 pF)

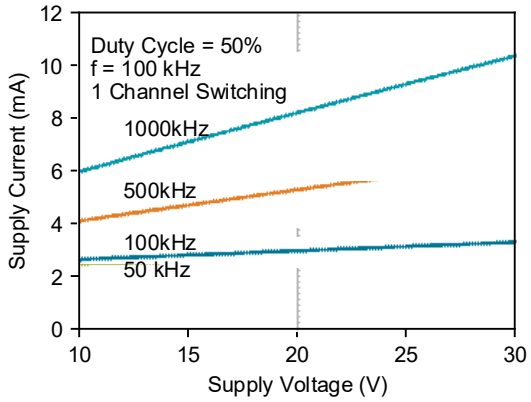

Figure 19. Supply Current vs. Supply Voltage (C_L = 100 pF)

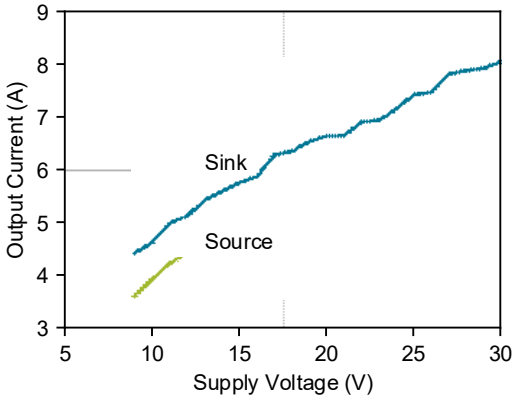

Figure 20. Peak Output Current vs. Supply Voltage

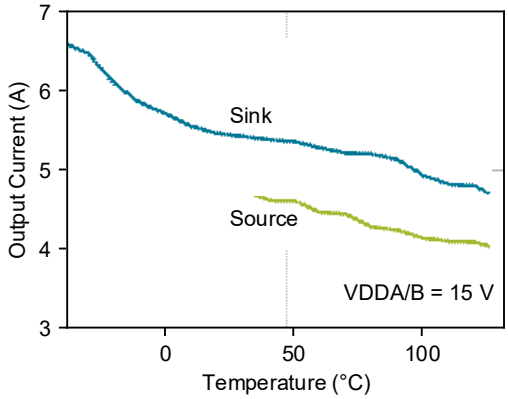

Figure 21. Peak Output Current vs. Temperature

5. Top-Level Block Diagrams

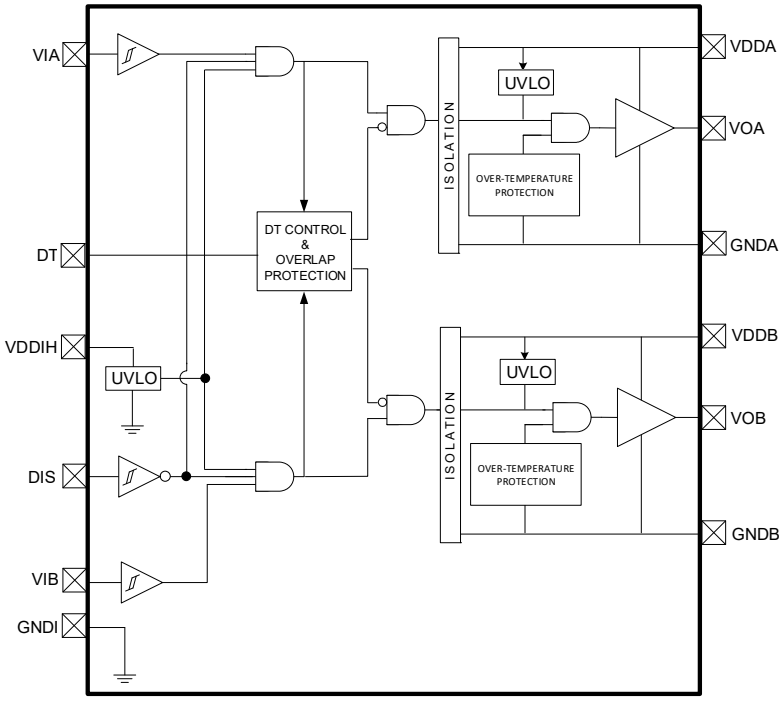

Figure 22. Si82520 HS/LS Isolated Drivers with DIS

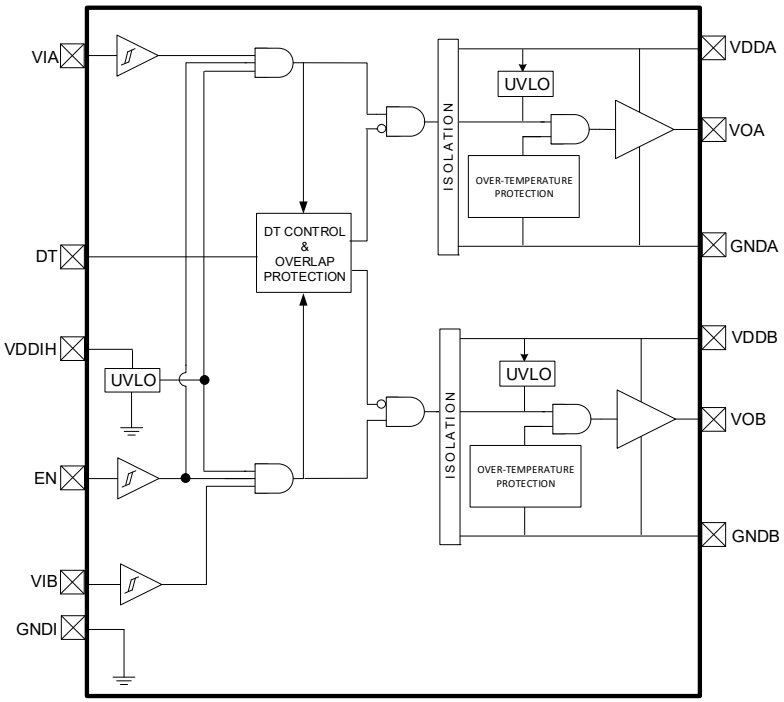

Figure 23. Si82521 HS/LS Isolated Drivers with EN

6. Package Outlines

6.1. 14-Pin Wide Body SOIC (WB SOIC-14)

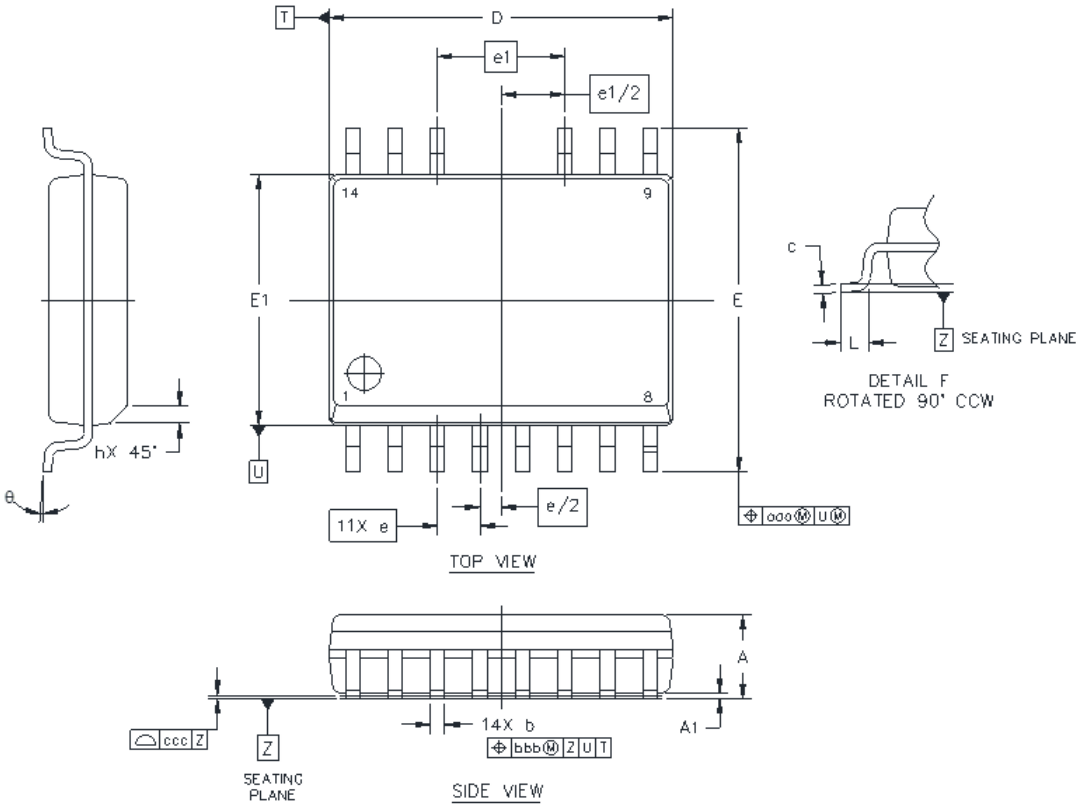

Figure 24. 14-Pin Small Outline Integrated Circuit (SOIC) Package

Table 9. Package Diagram Dimensions[1,2,3]

Dimension	Min	Max
A	—	2.65
A1	0.10	0.30
A2	2.05	—
b	0.35	0.49
c	0.23	0.32
D	10.15	10.45
E	10.05	10.55
E1	7.40	7.60
e	1.27 BSC	
e1	3.81 BSC	

Table 9. Package Diagram Dimensions[1,2,3] (Continued)

Dimension	Min	Max
L	0.40	1.27
h	0.25	0.75
θ	0°	8°
ααα	—	0.25
bbb	—	0.25
ccc	—	0.10

1. All dimensions shown are in millimeters (mm) unless otherwise noted.
2. Dimensioning and Tolerancing per ANSI Y14.5M-1994.
3. Recommended reflow profile per JEDEC J-STD-020 specification for small body, lead-free components.

7. Land Patterns

7.1. 14-Pin Wide Body SOIC (WB SOIC-14)

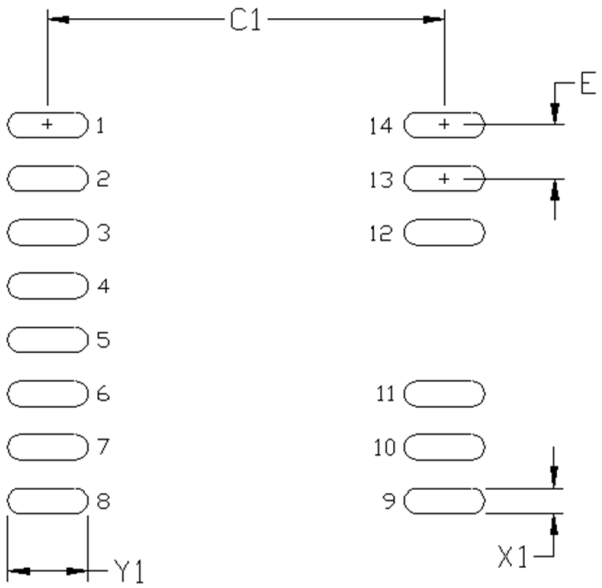

Figure 25. 14-Pin WB SOIC Land Pattern

Table 10. 14-Pin WB SOIC Land Pattern Dimensions[1,2]

Dimension	Feature	(mm)
C1	Pad Column Spacing	9.70
E	Pad Row Pitch	1.27
X1	Pad Width	0.60
Y1	Pad Length	1.60

1. This Land Pattern Design is based on IPC-7351 pattern SOIC127P1032X265-16AN for Density Level B (Median Land Protrusion).
2. All feature sizes shown are at Maximum Material Condition (MMC) and a card fabrication tolerance of 0.05 mm is assumed.

8. Top Markings

8.1. 14-Pin Wide Body SOIC (WB SOIC-14)

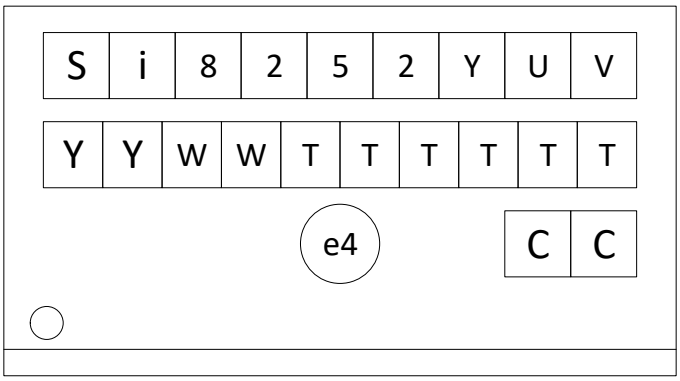

Table 11. Top Marking Explanation (14-Pin Wide Body SOIC)

Line 1 Marking:	Base Part Number Ordering Options See "9. Ordering Guide" on page 21 for more information.	Si82520/1 = ISODriver product series (HS/LS drivers) with high voltage VDDIH Y = Enable scheme • 0 = Disable pin option • 1 = Enable pin option U = UVLO level: A, B, C (applies to both product series) • A = 5 V • B = 8 V • C = 12 V V = Isolation rating: • D = 5.0 kV
Line 2 Marking:	YY = Year WW = Workweek TTTTTT = Mfg Code	Assigned by the Assembly House. Corresponds to the year and workweek of the mold date. Manufacturing Code from Assembly Purchase Order form.
Line 3 Marking:	Circle = 1.7 mm Diameter (Center Justified)	"e4" Pb-Free Symbol
	Country of Origin ISO Code Abbreviation	TW = Taiwan

9. Ordering Guide

9.1. Industrial and Automotive Grade OPNs

Industrial-grade devices (part numbers having an “-I” in their suffix) are built using well-controlled, high-quality manufacturing flows to ensure robustness and reliability. Qualifications are compliant with JEDEC, and defect reduction methodologies are used throughout definition, design, evaluation, qualification, and mass production steps.

Automotive-grade devices (part numbers having an “-A” in their suffix) are built using automotive-specific flows at all steps in the manufacturing process to ensure robustness and low defectivity. These devices are supported with AIAG-compliant Production Part Approval Process (PPAP) documentation, and feature International Material Data System (IMDS) and China Automotive Material Data System (CAMDS) listing. Qualifications are compliant with AEC-Q100, and a zero-defect methodology is employed throughout definition, design, evaluation, qualification, and mass production steps.

Table 12. Si8252xOrdering Guide[1,2,3,4,5,6,7,8]

Ordering Part Number (OPN)	Automotive OPN	Configuration	Output UVLO (V)	Enable/ Disable	Package Type	Isolation Rating (kV_{RMS})
WB SOIC-14 Package Options						
Si82520AD-IS3	Si82520AD-AS3	HS/LS, VIA/VIB	5	DIS	WB SOIC-14	5
Si82520BD-IS3	Si82520BD-AS3	HS/LS, VIA/VIB	8	DIS	WB SOIC-14	5
Si82520CD-IS3	Si82520CD-AS3	HS/LS, VIA/VIB	12	DIS	WB SOIC-14	5
Si82521AD-IS3	Si82521AD-AS3	HS/LS, VIA/VIB	5	EN	WB SOIC-14	5
Si82521BD-IS3	Si82521BD-AS3	HS/LS, VIA/VIB	8	EN	WB SOIC-14	5
Si82521CD-IS3	Si82521CD-AS3	HS/LS, VIA/VIB	12	EN	WB SOIC-14	5

1. All products are rated at 4 A sink and source output drive current max.
2. All packages are RoHS-compliant with peak reflow temperatures of 260 °C according to the JEDEC industry standard classifications and peak solder temperatures.
3. “Si” and “SI” are used interchangeably.
4. All HS/LS drivers have built-in overlap protection while the single and dual drivers do not.
5. All options are rated for ambient temperatures from –40 °C to +125 °C, and are recommended for industrial or automotive grade operation.
6. An “R” at the end of the part number denotes tape and the reel packaging option.
7. Automotive-Grade devices (with an “-A” suffix) are identical in construction materials and electrical parameters to their Industrial-Grade (with an “-I” suffix) version counterpart. Automotive-Grade products are produced utilizing full automotive process flows and additional statistical process controls throughout the manufacturing flow. The Automotive-Grade part number is included on shipping labels.
8. In “8. Top Markings” on page 20, the Manufacturing Code represented by either “RTTTTT” or “TTTTTT” contains as its first character a letter in the range N through Z to indicate Automotive-Grade.

10. Revision History

Revision	Date	Description	Notes
B	July, 2024	• Removed DFN-14 from RoHS-compliant packages in front page Key Features. • Removed Figure 2. Si8252x DFN-14 Pin Description. • Removed DFN-14 package options from 9. Ordering Guide. • Removed DFN-14 specs from Table 6. Insulation and Safety-Related Specifications. • Removed DFN-14 specs from Table 7. IEC 60664-1 Ratings. • Removed DFN-14 specs from Table 8. Thermal Characteristics. • Removed package outline section 6.2. 14 LD DFN (DFN-14). • Removed land pattern section 7.2. 14 LD DFN. • Removed top mark section 8.2. 14 LD DFN.	CN0120509
A	November, 2022	• Changed decimal-based revision number to alpha-numeric revision code. • Updated Safety Approvals on front page. • Updated 4. Electrical Characteristics . - Updated Table 4.2 Regulatory Information (Pending). - Updated Table 4.3 Insulation and Safety-Related Specifications. - Updated Table 4.4 IEC 60664-1 Ratings. - Removed Table 4.5. IEC 60747-17 Insulation Characteristics. - Removed Table 4.6. IEC Safety Limiting Values. - Updated Table 4.6 Absolute Maximum Ratings. - Removed Figure 4.2. WB SOIC-14 Thermal Derating Curve, Dependence of Safety Limiting Values. • Updated 6. Pin Descriptions. - Updated Figure 6.2 Si8252x DFN-14. • Updated 8. Land Patterns. - Updated 9.2 14. LD DFN.	CN0097357
1.0	February, 2021	• Updated Ordering Guide. • Formatting, typo, and uniformity edits. • Changed DT waveform for accuracy. • Modified EN pin CDM spec.	
0.6	September, 2020	• Updated θ_{JA} for WB.	
0.5	September, 2019	• Formatting and typo corrections.	
0.2	January, 2019	• Separated data sheet from Si8252x products from Si823Hx products.	

Copyright © 2023-2024, Skyworks Solutions, Inc. All Rights Reserved.

Information in this document is provided in connection with Skyworks Solutions, Inc. ("Skyworks") products or services. These materials, including the information contained herein, are provided by Skyworks as a service to its customers and may be used for informational purposes only by the customer. Skyworks assumes no responsibility for errors or omissions in these materials or the information contained herein. Skyworks may change its documentation, products, services, specifications or product descriptions at any time, without notice. Skyworks makes no commitment to update the materials or information and shall have no responsibility whatsoever for conflicts, incompatibilities, or other difficulties arising from any future changes.

No license, whether express, implied, by estoppel or otherwise, is granted to any intellectual property rights by this document. Skyworks assumes no liability for any materials, products or information provided hereunder, including the sale, distribution, reproduction or use of Skyworks products, information or materials, except as may be provided in Skyworks' Terms and Conditions of Sale.

THE MATERIALS, PRODUCTS AND INFORMATION ARE PROVIDED "AS IS" WITHOUT WARRANTY OF ANY KIND, WHETHER EXPRESS, IMPLIED, STATUTORY, OR OTHERWISE, INCLUDING FITNESS FOR A PARTICULAR PURPOSE OR USE, MERCHANTABILITY, PERFORMANCE, QUALITY OR NON-INFRINGEMENT OF ANY INTELLECTUAL PROPERTY RIGHT; ALL SUCH WARRANTIES ARE HEREBY EXPRESSLY DISCLAIMED. SKYWORKS DOES NOT WARRANT THE ACCURACY OR COMPLETENESS OF THE INFORMATION, TEXT, GRAPHICS OR OTHER ITEMS CONTAINED WITHIN THESE MATERIALS. SKYWORKS SHALL NOT BE LIABLE FOR ANY DAMAGES, INCLUDING BUT NOT LIMITED TO ANY SPECIAL, INDIRECT, INCIDENTAL, STATUTORY, OR CONSEQUENTIAL DAMAGES, INCLUDING WITHOUT LIMITATION, LOST REVENUES OR LOST PROFITS THAT MAY RESULT FROM THE USE OF THE MATERIALS OR INFORMATION, WHETHER OR NOT THE RECIPIENT OF MATERIALS HAS BEEN ADVISED OF THE POSSIBILITY OF SUCH DAMAGE.

Skyworks products are not intended for use in medical, lifesaving or life-sustaining applications, or other equipment in which the failure of the Skyworks products could lead to personal injury, death, physical or environmental damage. Skyworks customers using or selling Skyworks products for use in such applications do so at their own risk and agree to fully indemnify Skyworks for any damages resulting from such improper use or sale.

Customers are responsible for their products and applications using Skyworks products, which may deviate from published specifications as a result of design defects, errors, or operation of products outside of published parameters or design specifications. Customers should include design and operating safeguards to minimize these and other risks. Skyworks assumes no liability for applications assistance, customer product design, or damage to any equipment resulting from the use of Skyworks products outside of Skyworks' published specifications or parameters.

Skyworks, the Skyworks symbol, Sky5®, SkyOne®, SkyBlue™, Skyworks Green™, ClockBuilder®, DSPLL®, ISOmodem®, ProSLIC®, SiPHY®, and RFeIC® are trademarks or registered trademarks of Skyworks Solutions, Inc. or its subsidiaries in the United States and other countries. Third-party brands and names are for identification purposes only and are the property of their respective owners. Additional information, including relevant terms and conditions, posted at www.skyworksinc.com, are incorporated by reference.