DATA SHEET

Si88x4x Quad Digital Isolators with DC-DC Converter

The Si88xx integrates Skyworks' proven digital isolator technology with an on-chip isolated dc-dc converter that provides regulated output voltages of 3.3 or 5.0 V (or >5 V with external components) at peak output power levels of up to 5 W. These devices provide up to four digital channels. The dc-dc converter has user-adjustable frequency for minimizing emissions, a soft-start function for safety, a shut-down option and loop compensation. The device requires only minimal passive components and a miniature transformer.

The ultra-low-power digital isolation channels offer substantial data rate, propagation delay, size and reliability advantages over legacy isolation technologies. Data rates up to 100 Mbps max are supported, and all devices achieve propagation delays of only 23 ns max. Ordering options include a choice of dc-dc converter features, isolation channel configurations and a failsafe mode. All products are certified by UL, CSA, VDE, and CQC.

Automotive Grade is available. These products are built using automotive-specific flows at all steps in the manufacturing process to ensure the robustness and low defectivity required for automotive applications.

Industrial Applications

- Industrial automation systems
- Medical electronics
- Isolated switch mode supplies
- Inverters
- Data Acquisition
- Motor control
- PLCs, distributed control systems

Automotive Applications

- Hybrid electric and electric vehicles
- Traction inverters
- Battery management systems
- Vehicle communication buses

Safety Regulatory Approvals

- UL 1577 recognized
  - Up to 5000 V_{RMS} for one minute
- CSA certification conformity
  - 62368-1 (reinforced insulation)
- VDE certification conformity
  - 60747-17 (basic insulation, pending)
  - 62368-1 (conformity)
- CQC certification approval, GB4943.1

Features

- High-speed isolators with integrated dc-dc converter
- Fully-integrated, secondary-sensing, feedback-controlled converter with dithering for low EMI
- DC-DC converter peak efficiency of 83% with external power switch
- Up to 5 W isolated power with external power switch
- Options include dc-dc shutdown, frequency control, and soft start
- Standard Voltage Conversions
  - 3/5 V to isolated 3/5 V
  - 24 V to isolated 3/5 V
  - 3/5 V to isolated 24 V
  - 24 V to isolated 24 V
- Precise timing on digital isolators
  - 0 to 100 Mbps
  - 18 ns typical prop delay
- High electromagnetic immunity and ultra-low emissions
- RoHS compliant packages
  - SOIC-20 wide-body
  - SOIC-24 wide-body
- Isolation of up to 5000 V_{RMS}
- High transient immunity of 100 kV/µs (typical)
- AEC-Q100 qualified
- Wide temp range: –40 to +125 °C
- Automotive-grade OPNs available
  - AIAG compliant PPAP documentation support
  - IMDS and CAMDS listing support

Skyworks Green™ products are compliant with all applicable legislation and are halogen-free. For additional information, refer to *Skyworks Definition of Green™*, document number SQ04–0074.

1. Pin Descriptions

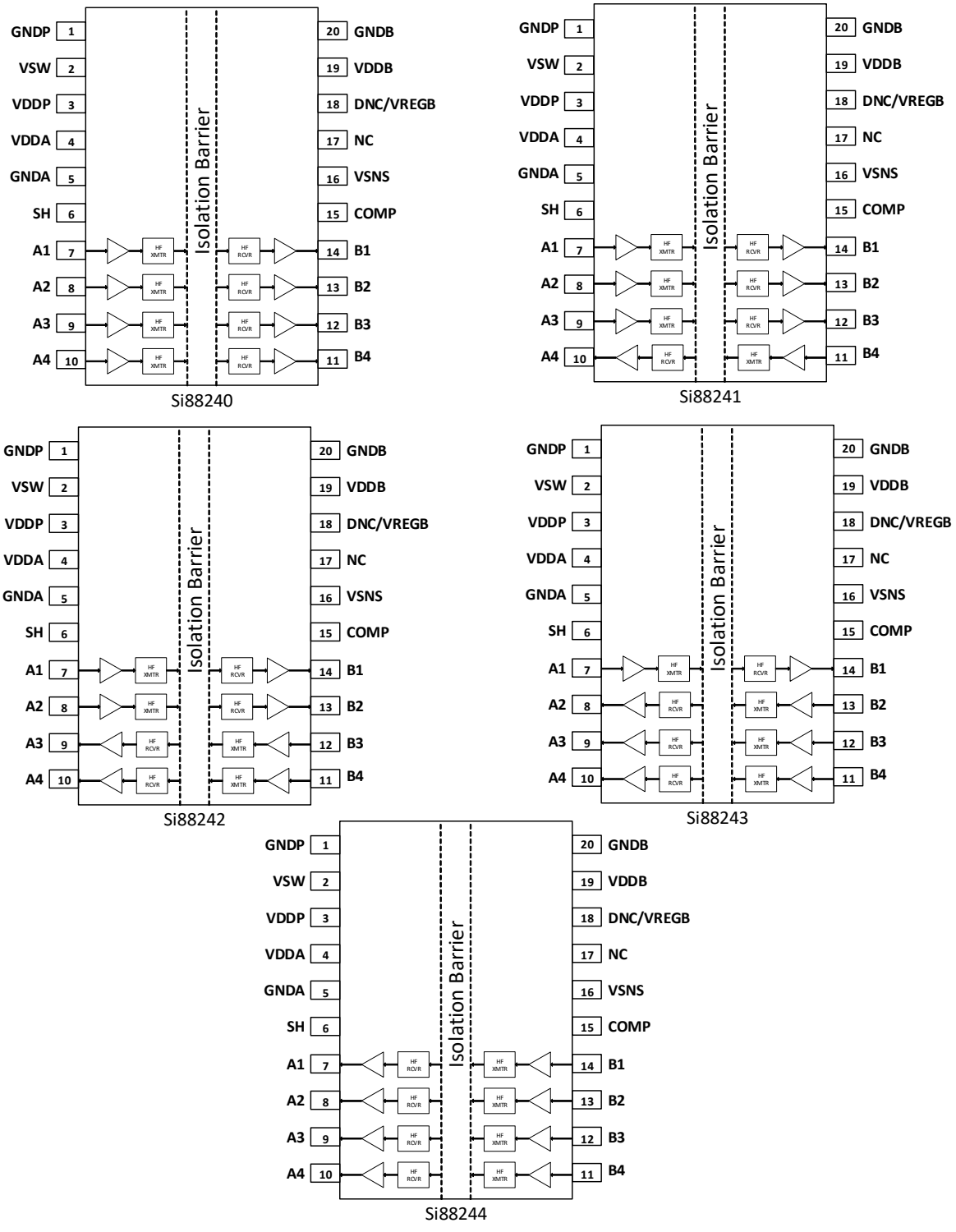

Figure 1. Si8824x Pin Configurations

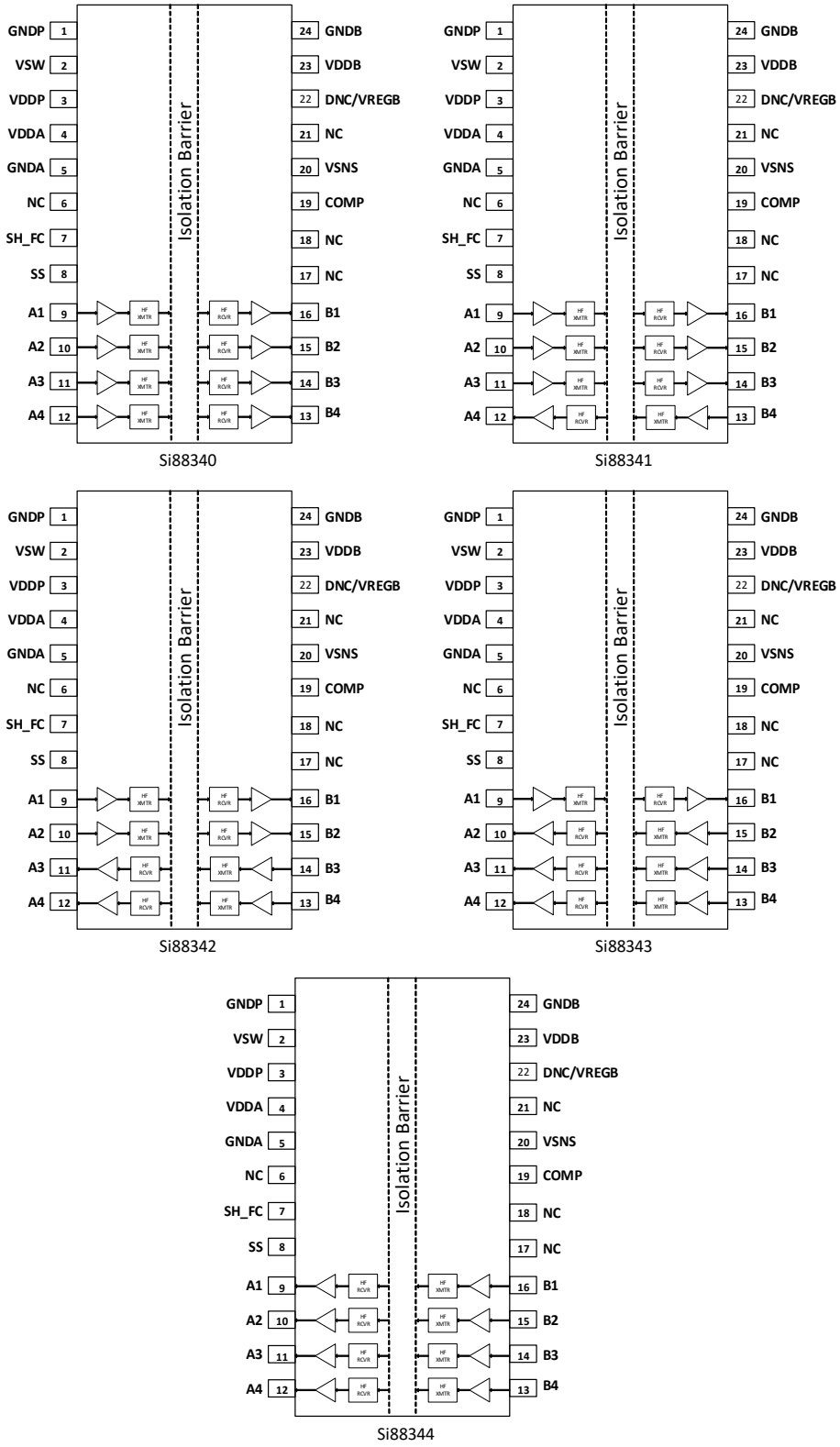

Figure 2. Si8834x Pin Configurations

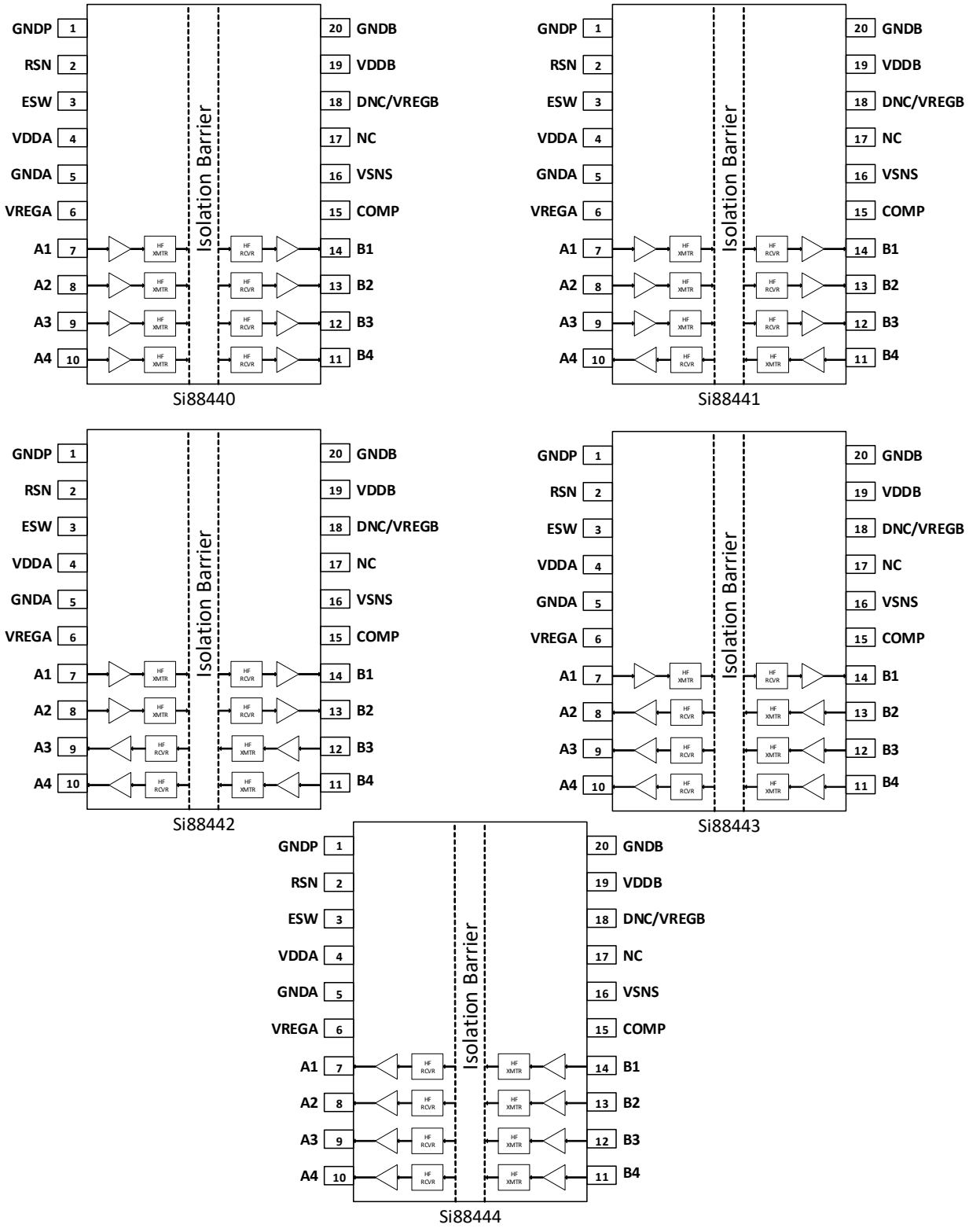

Figure 3. Si8844x Pin Configurations

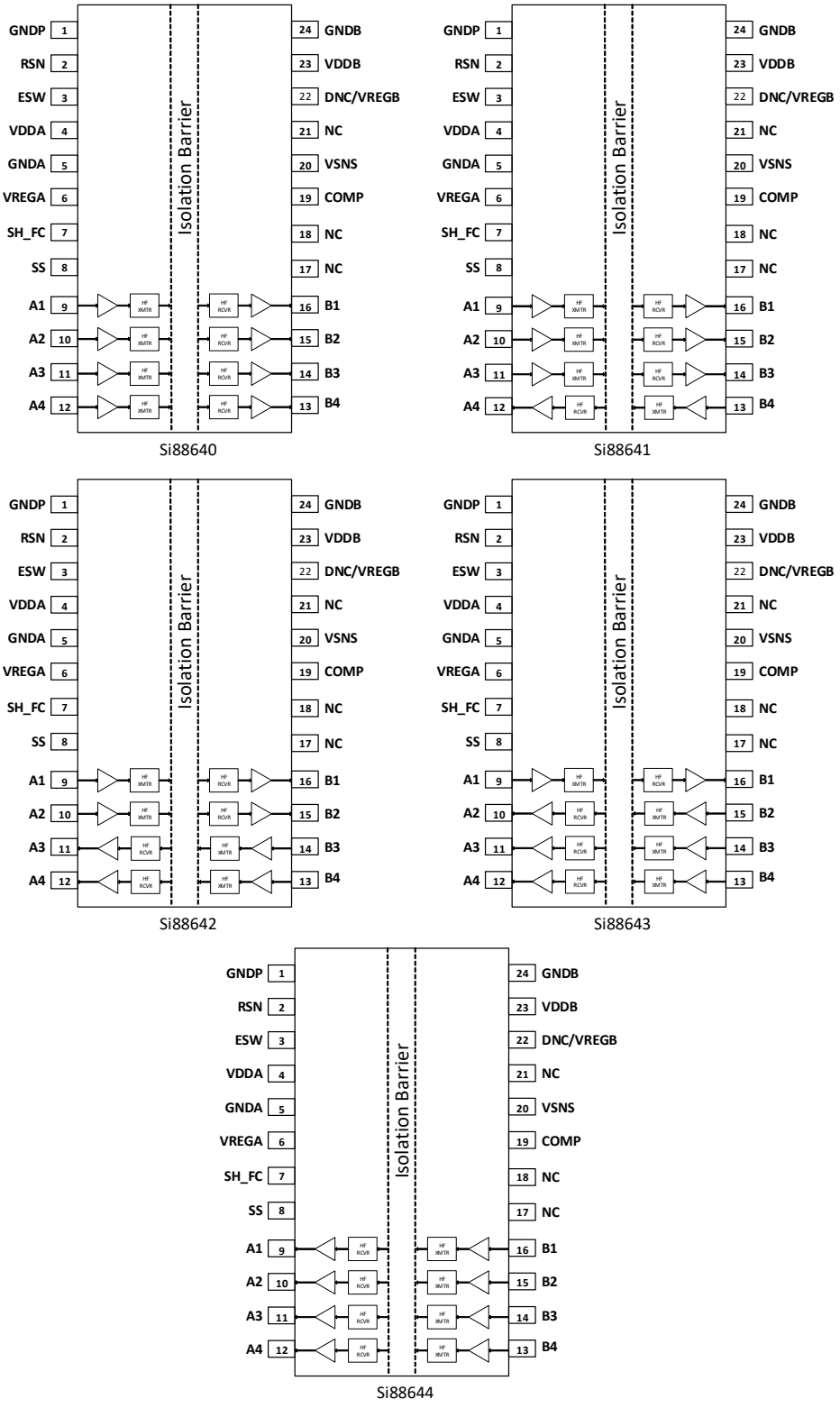

Figure 4. Si8864x Pin Configurations

Table 1. Si88x4x Pin Descriptions

Pin Name	Description
DC-DC Input Side	
VDDP	Power stage primary power supply.
V_{REGA}	Voltage reference output for external voltage regulator pin.
GNDP	Power stage ground.
ESW	Power stage external switch driver output.
VSW	Power stage internal switch output.
SS	Soft startup control.
SH, SH_FC	Shutdown and Switch frequency control.
RSN	Power stage current sense input.
DC-DC Output Side	
VSNS	Power stage feedback input.
COMP	Power stage compensation.
DNC/V_{REGB}	Voltage reference output for external voltage regulator pin. This pin has a Zener connected internally. Use this pin as reference only when output voltage from dc-dc is > 5.5 V. If output voltage is ≤ 5.5V, this pin should be read as DNC or Do Not Connect, and should be no connect.
NC	No connect; this pin is not connected to the silicon.
Digital Isolator VDDA Side	
VDDA	Primary side signal power supply.
A1–A4	I/O signal channel 1–4.
GNDA	Primary side signal ground.
Digital Isolator VDDB Side	
VDDB	Secondary side signal power supply.
B1–B4	I/O signal channel 1–4.
GNDB	Secondary side signal ground.

2. Functional Description

2.1. Theory of Operation

The Si88xx family of products is capable of transmitting and receiving digital data signals from an isolated power domain to a local system power domain with up to 5 kV of isolation. Each part has four unidirectional digital isolation channels. In addition, Si88xx products include an integrated controller and switches for a dc-dc converter which regulates output voltage by sensing it on the isolated side.

2.2. Digital Isolation

The operation of an Si88xx digital channel is analogous to that of a digital buffer, except an RF carrier transmits data across the isolation barrier. This simple architecture provides a robust isolated data path and requires no special considerations or initialization at start-up. A simplified block diagram for a single Si88xx channel is shown in the following figure.

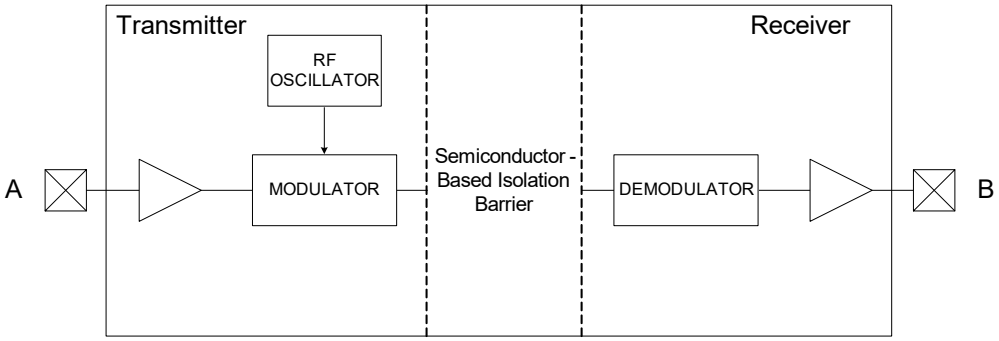

Figure 5. Simplified Si88xx Channel Diagram

A channel consists of an RF Transmitter and RF Receiver separated by a silicon dioxide capacitive isolation barrier. In the transmitter, input A modulates the carrier provided by an RF oscillator using on/off keying. The receiver contains a demodulator that decodes the input state according to its RF energy content and applies the result to output B via the output driver. This RF on/off keying scheme is superior to pulse code schemes as it provides best-in-class noise immunity, low power consumption, and better immunity to magnetic fields. See Figure 6 for more details.

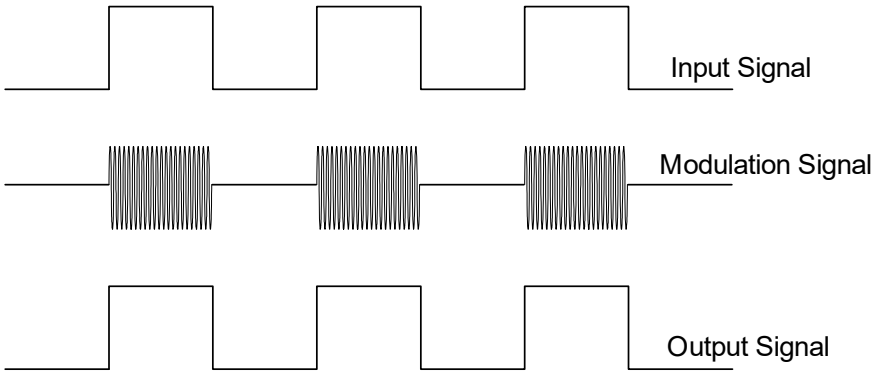

Figure 6. Modulation Scheme

2.3. DC-DC Converter Application Information

The Si88xx isolated dc-dc converter is based on a modified fly-back topology and uses an external transformer and Schottky rectifying diode for low cost and high operating efficiency. The PWM controller operates in closed-loop, peak current mode control and generates isolated output voltages with 2 W average output power at 5.0 V. Options are available for 24 Vdc input or output operation and externally configured switching frequency.

The dc-dc controller modulates a pair of internal primary-side power switches (see Figure 7, "Si883xx Block Diagram: 3 V to 5 V Input to 3 V to 5 V Output," on page 10) to generate an isolated voltage at external diode D1 cathode. Closed-loop feedback is provided by a compensated error amplifier, which compares the voltage at the VSNS pin to an internal voltage reference. The resulting error voltage is fed back through the isolation barrier via an internal feedback path to the controller, thus completing the control loop.

For higher input supply voltages than 5 V, an external FET Q2 is modulated by a driver pin ESW as shown in Figure 10, "Si886xx Block Diagram: 24 V Input to 24 V Output," on page 13). A shunt resistor based voltage sense pin RSN provides current sensing capability to the controller.

Additional features include an externally-triggered shutdown of the converter functionality using the SH pin and a programmable soft start configured by a capacitor connected to the SS pin. The Si88xx can be used in low- or high-voltage configurations. These features and configurations are explained in more detail below.

2.3.1. Shutdown

This feature allows the operation of the dc-dc converter to be shut down when asserted high. This function is provided by Pin 6 (labeled "SH" on the Si882xx) and pin 7 (labeled "SH_FC" on the Si883xx and Si886xx). This feature is not available on the Si884xx. Pin 6 or pin 7 provide the exact same functionality and shut down the dc-dc converter when asserted high. For normal operation, pins 6 and 7 should be connected to ground.

2.3.2. Soft-Start

The dc-dc controller has an internal timer that controls the power conversion start-up to limit inrush current. There is also the Soft Start option where users can program the soft start up by an external capacitor connected to the SS pin. This feature is available on the Si883xx and the Si886xx.

2.3.3. Programmable Frequency

The frequency of the PWM modulator is set to a default of 250 kHz for Si882xx/4xx. Users can program their desired frequency within a given band of 200 kHz to 800 kHz by controlling the time constant of an external RC connected to the SH_FC and SS pins for Si883xx/6xx.

2.3.4. External Transformer Driver

The dc-dc controller has internal switches (VSW) for driving the transformer with up-to a 5.5 V voltage supply. For higher voltages on the primary side, a driver output (ESW) is provided that can drive an external NMOS power transistor for driving the transformer. When this configuration is used, a shunt resistor based voltage sense pin (RSN) provides current sensing to the controller.

2.3.5. V_{REGA}, V_{REGB}

For supporting voltages greater than 5.5 V, an internal voltage regulator (V_{REGA}, V_{REGB}) needs to be used in conjunction with an external NPN transistor, a resistor and a capacitor to provide regulated voltage to the IC.

2.3.6. Output Voltage Control

The isolated output voltage (VOUT) is sensed by a resistor divider that provides feedback to the controller through the VSNS pin. The voltage error is encoded and transmitted back to the primary side controller across the isolation barrier, which in turn changes the duty cycle of the transformer driver. The equation for VOUT is as follows:

$$VOUT = VSNS \times \left(1 + \frac{R1}{R2}\right) + R1 \times I_{OFFSET}$$

2.3.7. Compensation

The dc-dc converter uses peak current mode control. The loop is compensated by connecting an external resistor in series with a capacitor from the COMP pin to GNDB. The compensation resistance, RCOMP is fixed at 49.9 kΩ for Si882xx/3xx and 100 kΩ for Si884xx/6xx to match internal resistance. Capacitance value is given by the following equation, where f_C is crossover frequency:

$$CCOMP = \frac{6}{2 \times \pi \times f_C \times RCOMP}$$

For more details on the calculations involved, please see "AN892: Design Guide for Isolated DC/DC Using the Si882xx/883xx".

2.3.8. Thermal Protection

A thermal shutdown circuit is included to protect the system from over-temperature events. The thermal shutdown is activated at a junction temperature that prevents permanent damage from occurring.

2.3.9. Cycle Skipping

Cycle skipping is included to reduce switching power losses at light loads. This feature is transparent to the user and is activated automatically at light loads. The product options with integrated power switches (Si882xx/3xx) may never experience cycle skipping during operation even at light loads while the external power switch options (Si884xx/6xx) are likely to have cycle skipping start at light loads.

2.3.10. Low-Voltage Configuration

The low-voltage configuration is used for converting 3.0 V to 5.5 V. All product options of the Si882xx and Si883xx are intended for this configuration.

An advantage of Si88xx devices over other converters that use this same topology is that the output voltage is sensed on the secondary side without requiring additional optocouplers and support circuitry to bias those optocouplers. This allows the dc-dc to operate with superior line and load regulation while reducing external components and increasing lifetime reliability.

In a typical digital signal isolation application, the dc-dc powers the Si882xx and Si883xx VDDB as shown in Figure 7, "Si883xx Block Diagram: 3 V to 5 V Input to 3 V to 5 V Output," on page 10. In addition to powering the isolated side of the dc-dc, it can deliver up to 2 W of power to other loads. The dc-dc requires an input capacitor, C2, blocking capacitor, C1, transformer, T1, rectifying diode, D1, and an output capacitor, C3. Resistors R1 and R2 divide the output voltage to match the internal reference of the error amplifier and set the Vout voltage level.

Type 1 loop compensation made by RCOMP and CCOMP are required at the COMP pin. Though it is not necessary for normal operation, we recommend that a snubber be used to reduce any voltage spikes at the VSW pin and minimize radiated emissions.

To ensure reliable dc-dc operation the following layout guidelines are recommended:

1. VDDA and VDDP should be connected by the shortest possible trace.
   A minimum trace width of 15 mils is recommended.
2. GNDA and GNDP should be directly connected by the shortest possible trace.
   A minimum trace width of 15 mils is recommended.
3. Bypass capacitor C2 should be directly connected to both VDDP and GNDP.
   A minimum trace width of 15 mils is recommended.
4. GNDA should be directly connected to a ground plane.

More details can be found in "AN892: Design Guide for Isolated DC/DC Using the Si882xx/883xx".

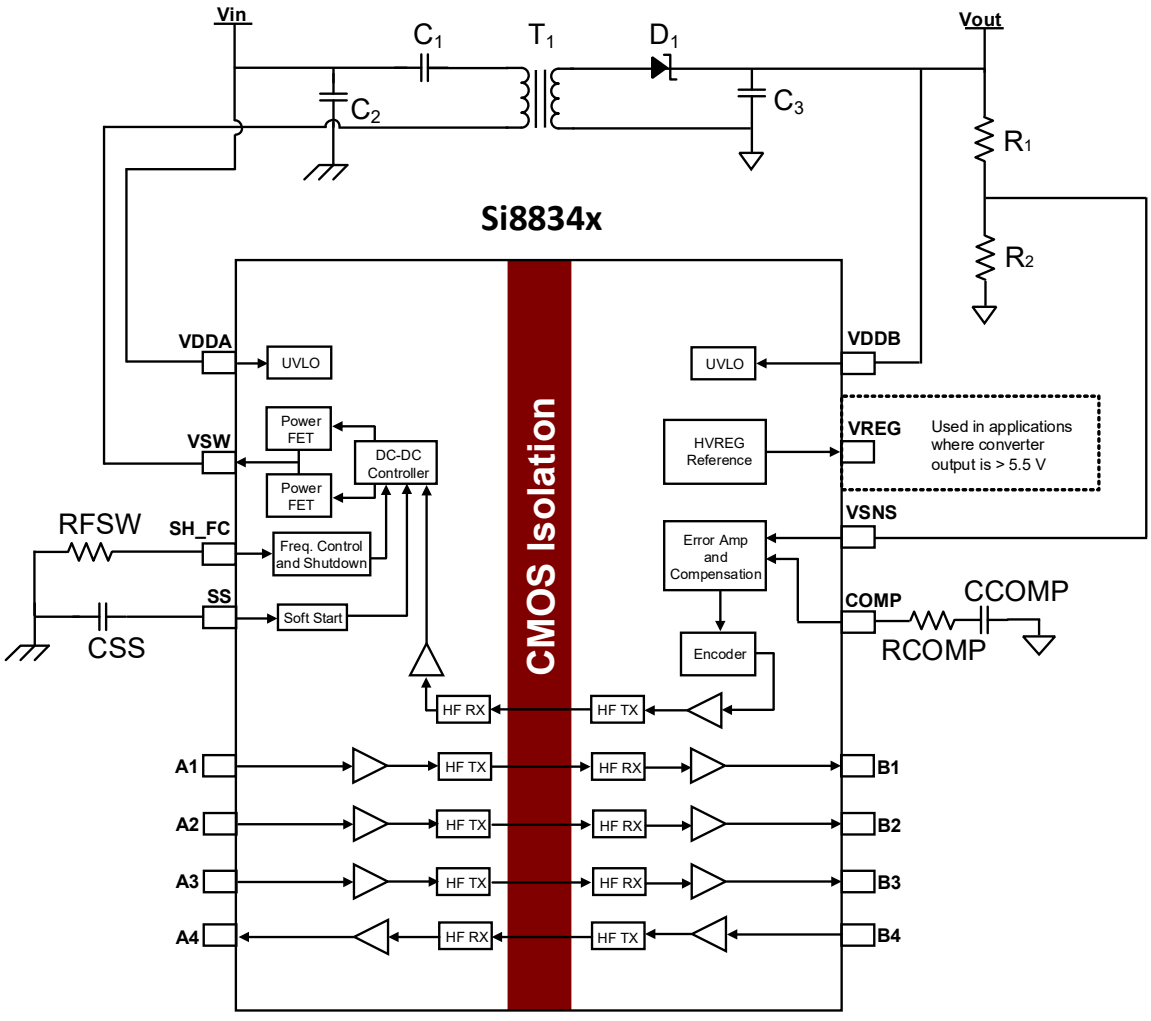

Figure 7. Si883xx Block Diagram: 3 V to 5 V Input to 3 V to 5 V Output

2.3.11. Low-Voltage to High-Voltage Configuration

The low-voltage to high-voltage configuration is used for converting 3.0 V to 5.5 V, up to 24 V.

In a typical digital signal isolation application, the dc-dc powers the Si882xx and Si883xx VOUT as shown in the figure below. In addition to powering the isolated side of the dc-dc, it can deliver up to 2 W of power to other loads. The dc-dc requires an input capacitor, C2, blocking capacitor, C1, transformer, T1, rectifying diode, D1, and an output capacitor, C3. Resistors R1 and R2 divide the output voltage to match the internal reference of the error amplifier. To supply VDDB that requires voltage lower than 5.5 V, Q3 transistor is biased and filtered by R5 and C4. Type 1 loop compensation made by RCOMP and CCOMP are required at the COMP pin. Though it is not necessary for normal operation, we recommend that a snubber be used to minimize radiated emissions. More details can be found in "AN892: Design Guide for Isolated DC/DC Using the Si882xx/883xx".

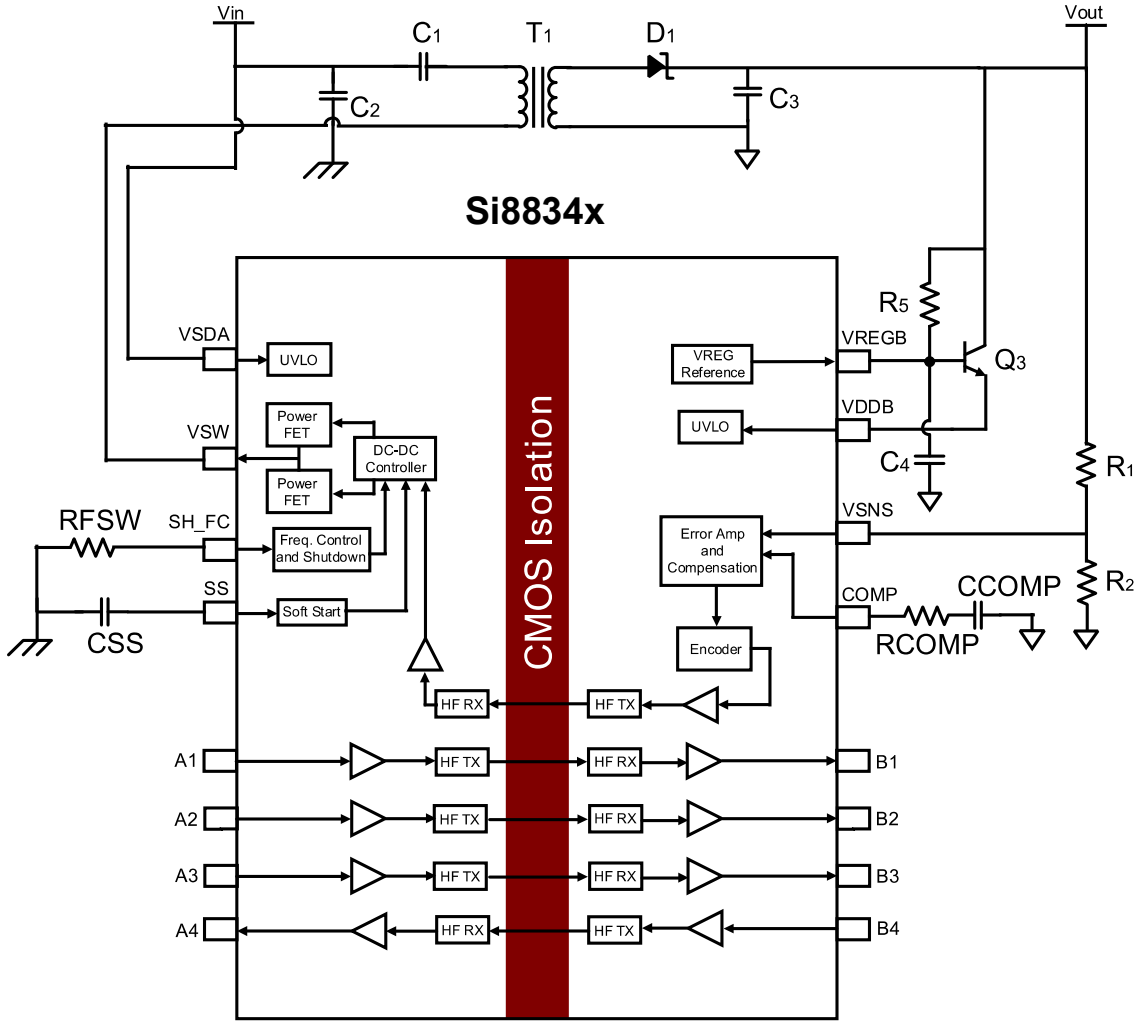

Figure 8. Si883xx Block Diagram: 3 V to 5 V Input to up to 24 V Output

2.3.12. High-Voltage to Low-Voltage Configuration

The high-voltage configuration is used for converting up to 24 V to 3.3 V or 5.0 V. All product options of the Si884xx and Si886xx are intended for this configuration.

Si884xx and Si886xx can be used for dc-dc applications that have primary side voltage greater than 5.5 V. The dc-dc converter uses the isolated flyback topology. With this topology, the switch and sense resistor are external, allowing higher switching voltages. Digital isolator supply VDDA of the Si884xx and Si886xx require a supply less than or equal to 5.5 V. If a suitable supply is not available on the primary side, the V_{REGA} voltage reference with external NPN transistor can supply VDDA. This eliminates the need to design an additional linear regulator circuit. Like the Si882xx and Si883xx, the output voltage is sensed on the secondary side without requiring additional optocouplers and support circuitry to bias those optocouplers. This allows the dc-dc to operate with superior line and load regulation.

The figure below shows the block diagram of an Si886xx with external components. Si886xx is different from the Si882xx/883xx as it has externally-controlled switching frequency and soft start. The dc-dc requires input capacitor C2, transformer T1, switch Q1, sense resistor R4, rectifying diode D1 and an output capacitor C3. To supply VDDA, Q2 transistor is biased and filtered by R3 and C1. External frequency and soft start behavior is set by CSS and RFSW. Resistors R1 and R2 divide the output voltage to match the internal reference of the error amplifier. Type 1 loop compensation made by RCOMP and CCOMP are required at the COMP pin. Though it is not necessary for normal operation, we recommend to use a snubber, to minimize high-frequency emissions. For further details, see "AN901: Design Guide for Isolated DC/DC Using the Si884xx, Si886xx, or Si8282/84".

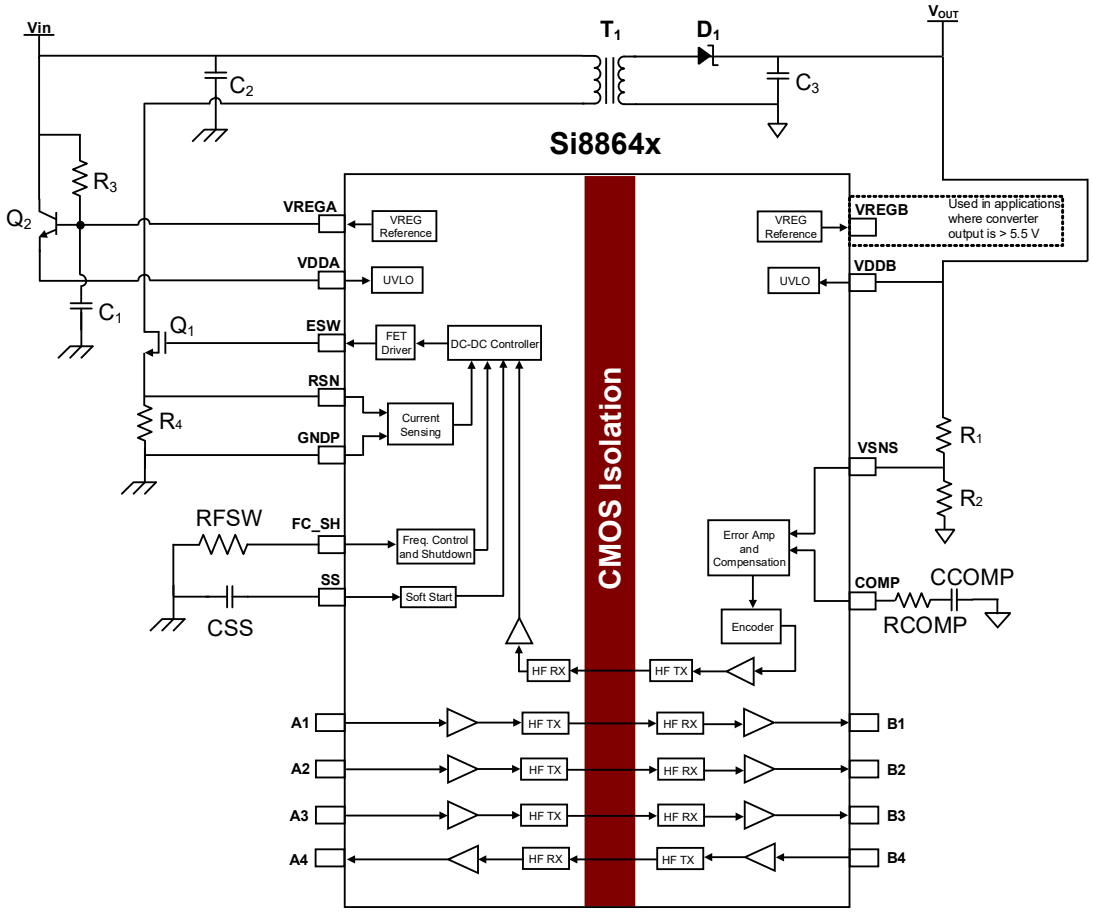

Figure 9. Si886xx Block Diagram: 24 V Input to 5 V Output

2.3.13. High-Voltage Configuration

The high-voltage configuration is used for converting input voltage up to 24 V to output voltage as high as 24 V. All product options of the Si884xx and Si886xx are intended for this configuration.

Si884xx and Si886xx can be used for dc-dc applications that have primary side voltage greater than 5.5 V. The dc-dc converter uses the isolated flyback topology. With this topology, the switch and sense resistor are external, allowing higher switching voltages. Digital isolator supply VDDA of the Si884xx and Si886xx require a supply less than or equal to 5.5 V. If a suitable supply is not available on the primary side, the V_{REGA} voltage reference with external NPN transistor Q2 can supply VDDA. This eliminates the need to design an additional linear regulator circuit. Like the Si882xx and Si883xx, the output voltage is sensed on the secondary side without requiring additional optocouplers and support circuitry to bias those optocouplers. This allows the dc-dc to operate with superior line and load regulation.

Figure 10 shows the block diagram of an Si886xx with external components. Si886xx is different from the Si882xx/883xx as it has externally-controlled switching frequency and soft start. The dc-dc requires input capacitor C2, transformer T1, switch Q1, sense resistor R4, rectifying diode D1 and an output capacitor C3. To supply VDDB, Q3 transistor is biased and filtered by R5 and C4. External frequency and soft start behavior is set by CSS and RFSW. Resistors R1 and R2 divide the output voltage to match the internal reference of the error amplifier. Type 1 loop compensation made by RCOMP and CCOMP are required at the COMP pin. Though it is not necessary for normal operation, we recommend to use a snubber, to minimize high-frequency emissions. For further details, see "AN901: Design Guide for Isolated DC-DC Using the Si884xx, Si886xx, or Si8282/84".

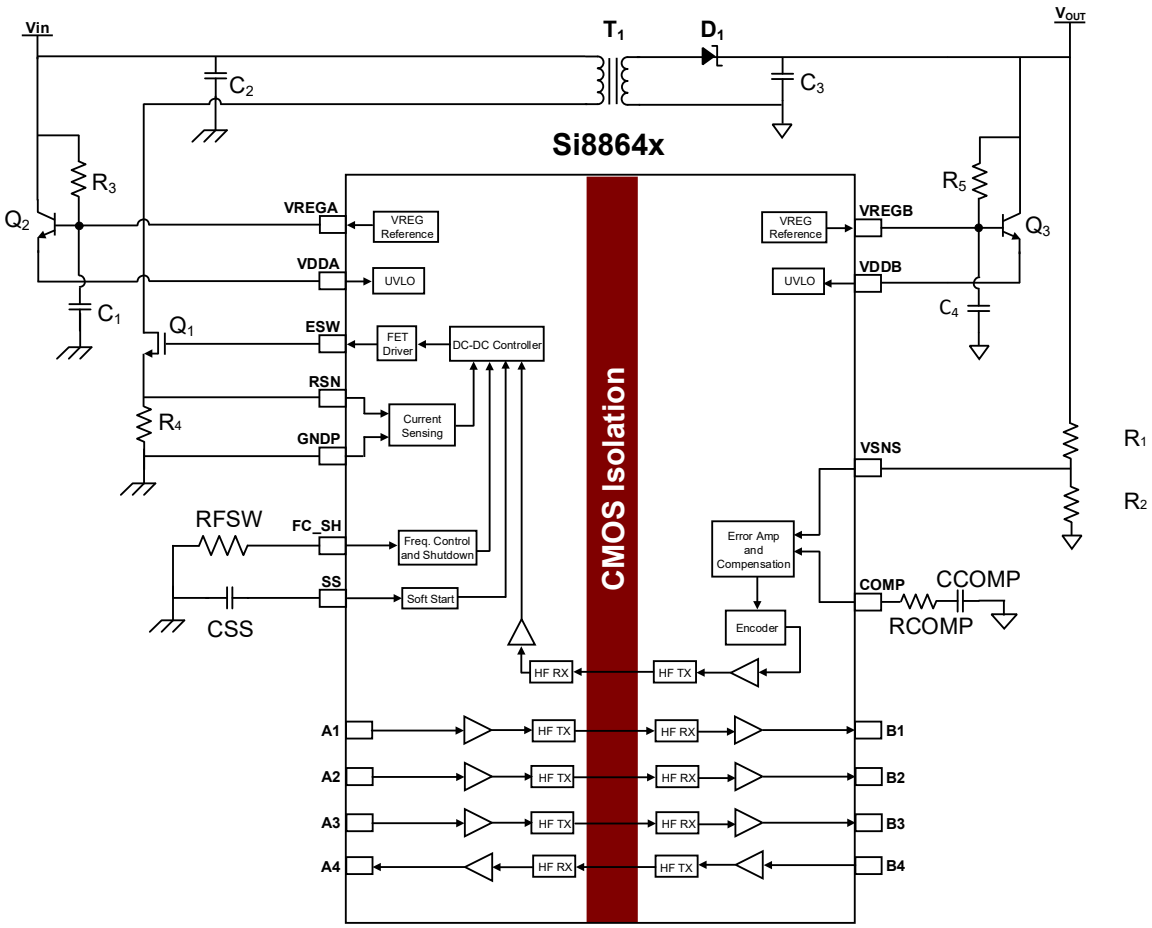

Figure 10. Si886xx Block Diagram: 24 V Input to 24 V Output

2.4. Transformer Design

The following table provides a list of transformers and their parametric characteristics that have been validated to work with Si882xx/3xx products (input voltage 3 to 5 V) and Si884xx/Si886xx products (input voltage of 24 V). It is recommended that users order the transformers from the vendors per the part numbers given below. Refer to "AN892: Design Guide for Isolated DC/DC using the Si882xx/883xx" and "AN901: Design Guide for Isolated DC/DC Using the Si884xx, Si886xx, or Si8282/84" for voltage translation applications not listed below.

To manufacture transformers from your preferred suppliers that may not be listed below, please specify to supplier the parametric characteristics as specified in the following table for a given input voltage and isolation rating.

Table 2. Transformer Specifications[1]

Transformer Supplier	Ordering Part #	Input Voltage	Output Voltage	Turns Ratio P:S	Leakage Inductance	Primary Inductance	Primary Resistance	Isolation Rating
UMEC (http://www.umec-usa.com)	UTB02185s	4.5 to 5.5 V	3.0 to 5.5 V	1.0:4.0	100 nH max	2 µH ± 5%	0.05 Ω max	2.5 kV_{RMS}
UMEC (http://www.umec-usa.com)	UTB02205s	12 V, 24 V	3.3 to 5.0 V, 15 V	3.0:1.0	800 nH max	25 µH ± 5%	0.135 Ω max	2.5 kV_{RMS}
UMEC (http://www.umec-usa.com)	UTB02240s	4.5 to 5.5V	3.0 to 5.5 V	1.0:4.0	100 nH max	2 µH ±5%	0.05 Ω max	5 kV_{RMS}
UMEC (http://www.umec-usa.com)	UTB02250s	7 to 24 V	3.3 to 5.5 V	3.0:1.0	600 nH max	25 µH ± 5%	0.135 Ω max	5 kV_{RMS}
Coilcraft[2] (http://www.coilcraft.com)	TA7608-AL	4.5 to 5.5 V	3.0 to 5.5 V	1.0:4.0	60 nH max	2 µH ± 5%	0.033 Ω max	2.5 kV_{RMS}
Coilcraft[2] (http://www.coilcraft.com)	TA7618-AL	4.5 to 5.5V	3.0 to 5.5 V	1.0:4.0	64 nH max	2.0 µH ±5%	0.031 Ω max	5 kV_{RMS}
Coilcraft[2] (http://www.coilcraft.com)	TA7788-AL	12V	5 V, 15 V	1.00 : 1.25 : 0.75	554 nH max	25 µH ±5%	0.49 Ω max	5 kV_{RMS}
Coilcraft[2] (http://www.coilcraft.com)	UA7902	12V	5 V, 15 V	3.0:1.0	971 nH max	25 µH ±5%	0.075 Ω max	5 kV_{RMS}
TDK (http://www.tdk.com)	P100940_A1	4.5 to 5.5V	3.0 to 5.5 V	1.0:4.0	40 nH max	2.0 µH ±10%	0.1 Ω max	2.4 kV_{RMS}
Mentech[2] (http://www.mnc-tek.com)	TTER09-0457S1	8 to 24 V	15 V, 24 V	1.0:1.0	550 nH max	25 µH ±10%	0.4 Ω max	2.5 kV_{RMS}
Mentech[2] (http://www.mnc-tek.com)	TTER09-0458S1	8 to 24 V	8 to 24 V	1.0:1.0	550 nH max	25 µH ±10%	0.4 Ω max	5 kV_{RMS}
Mentech[2] (http://www.mnc-tek.com)	TTER09-0568S1 TTAER09-2091SG	3.3 to 5.5 V	3.3 to 5.5 V	1.0:4.0	100 nH max	1.5 µH ±8%	0.05 Ω max	5 kV_{RMS}
Pulse (http://www.pulseelectronics.com/)	PA4896NL	8 to 24 V	7 to 24 V	1.0:1.0	650 nH max	25 µH ±10%	0.25 Ω max	2.5 kV_{RMS}
Pulse (http://www.pulseelectronics.com/)	PA4897NL	8 to 24 V	7 to 24 V	1.0:1.0	650 nH max	25 µH ±10%	0.25 Ω max	5 kV_{RMS}

1. For reference design details, see "AN892: Design Guide for Isolated DC/DC Using the Si882xx/883xx" or "AN901: Design Guide for Isolated DC-DC Using the Si884xx, Si886xx, or Si8282/84".
2. AEC-Q200 qualified.

3. Digital Isolator Device Operation

Table 3. Si88xx Logic Operation

VI Input	VDDI [1,2,3,4]	VDDO [1,2,3,4]	VO Output	Comments
H	P	P	H	Normal operation.
L	P	P	L	
X	UP	P	L[4] H[4]	Upon transition of VDDI from unpowered to powered, V_O returns to the same state as V_I.
X	P	UP	Undetermined	Upon transition of VDDO from unpowered to powered, V_O returns to the same state as V_I.

1. VDDI and VDDO are the input and output power supplies. VI and VO are the respective input and output terminals.
2. P = powered; UP = unpowered.
3. Note that an I/O can power the die for a given side through an internal diode if its source has adequate current. This situation should be avoided. We recommend that I/Os not be driven high when primary side supply is turned off or when in dc-dc shutdown mode.
4. See 8. Ordering Guide for details. This is the selectable fail-safe operating mode (ordering option). When VDDB is powered via the primary side and the integrated dc-dc, the default outputs are undetermined as secondary side power is not available when primary side power shuts off.

3.1. Device Startup

Outputs are held low during power up until VDDx is above the UVLO threshold for time period t_{SU}. Following this, the outputs follow the states of inputs.

3.2. Undervoltage Lockout

Undervoltage Lockout (UVLO) is provided to prevent erroneous operation during device startup and shutdown or when VDDx is below its specified operating circuits range. Both Side A and Side B each have their own undervoltage lockout monitors. Each side can enter or exit UVLO independently. For example, Side A unconditionally enters UVLO when VDDA falls below VDD_{UV-} and exits UVLO when VDDA rises above VDD_{UV+}. Side B operates the same as Side A with respect to its VDD supply.

3.3. Layout Recommendations

To ensure safety in the end user application, high voltage circuits (i.e., circuits with >30 V_{AC}) must be physically separated from the safety extra-low voltage circuits (SELV is a circuit with <30 V_{AC}) by a certain distance (creepage/clearance). If a component, such as a digital isolator, straddles this isolation barrier, it must meet those creepage/clearance requirements and also provide a sufficiently large high-voltage breakdown protection rating (commonly referred to as working voltage protection). Table 8, “Insulation and Safety-Related Specifications,” on page 30 and Table 10, “IEC60747-17 Insulation Characteristics,” on page 31 detail the working voltage and creepage/clearance capabilities of the Si88xx. These tables also detail the component standards (UL1577 and IEC60747-17), which are readily accepted by certification bodies to provide proof for end-system specifications requirements. Refer to the end-system specification (61010-1, 62368-1, 60601-1, etc.) requirements before starting any design that uses a digital isolator.

3.3.1. Supply Bypass

The Si88xx family requires a 0.1 µF bypass capacitor between all VDDx and their associated GNDx. The capacitor should be placed as close as possible to the package. To enhance the robustness of a design, the user may also include resistors (50–300 Ω) in series with the inputs and outputs if the system is excessively noisy.

3.3.2. Output Pin Termination

The nominal output impedance of an isolator driver channel is approximately 50 Ω, ±40%, which is a combination of the value of the on-chip series termination resistor and channel resistance of the output driver FET. When driving high-impedance terminated PCB traces, output pins should be source-terminated to minimize reflections.

3.4. Fail-Safe Operating Mode

Si88xx devices feature a selectable (by ordering option) mode whereby the default output state (when the input supply is unpowered) can either be a logic high or logic low when the output supply is powered. See Table 3, “Si88xx Logic Operation,” on page 15 and Table 20 “Si88x4x Ordering Guide” on page 40 for more information.

3.5. Typical Performance Characteristics

The typical performance characteristics are for information only. Refer to Table 6, “Electrical Characteristics,” on page 23 for specification limits. The data below is for all channels switching.

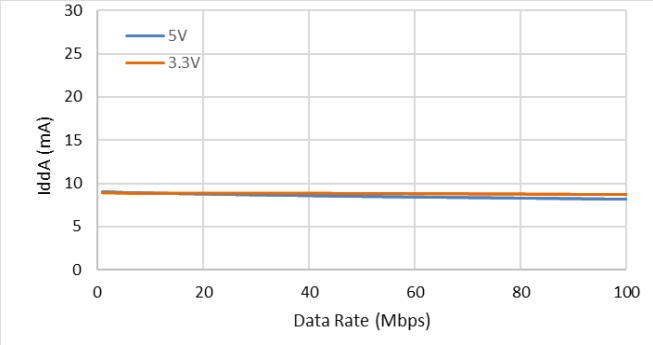

Figure 11. Si88240 Typical V_{DDA} Supply Current vs. Data Rate (5 V and 3.3 V Operation)

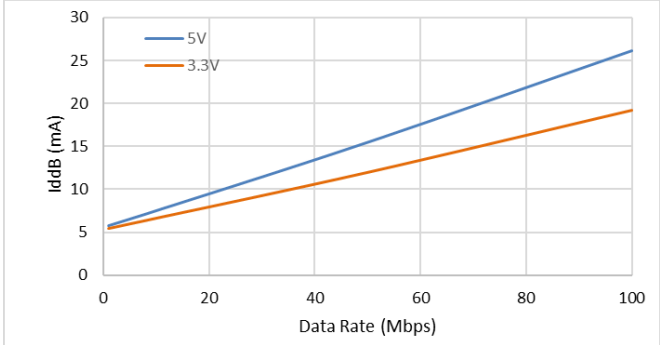

Figure 12. Si88240 Typical V_{DDB} Supply Current vs. Data Rate (5 V and 3.3 V Operation)

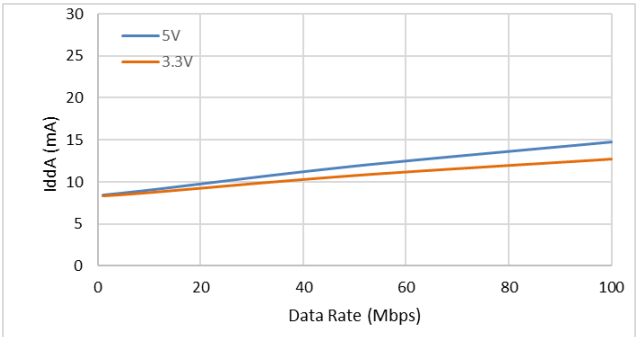

Figure 13. Si88241 Typical V_{DDA} Supply Current vs. Data Rate (5 V and 3.3 V Operation)

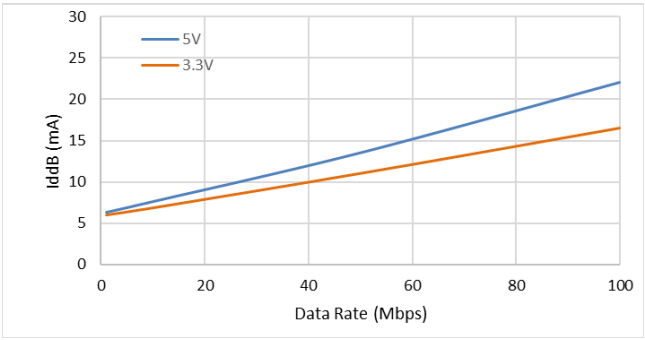

Figure 14. Si88241 Typical V_{DDB} Supply Current vs. Data Rate (5 V and 3.3 V Operation)

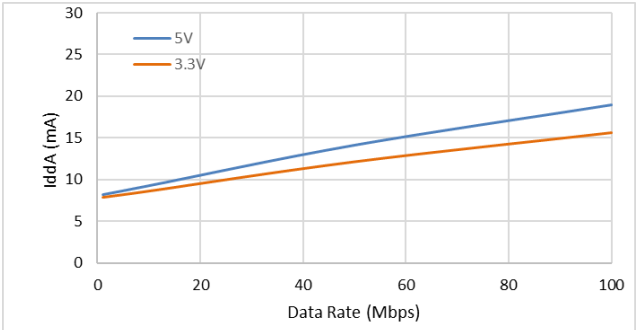

Figure 15. Si88242 Typical V_{DDA} Supply Current vs. Data Rate (5 V and 3.3 V Operation)

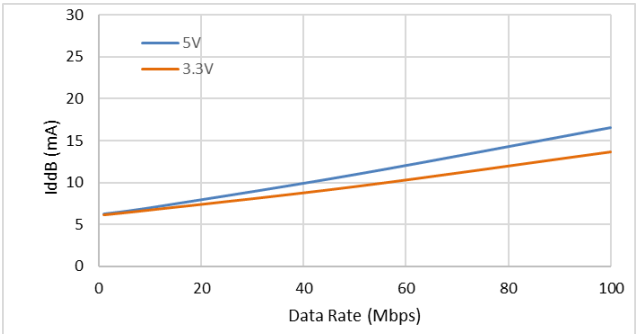

Figure 16. Si88242 Typical V_{DDB} Supply Current vs. Data Rate (5 V and 3.3 V Operation)

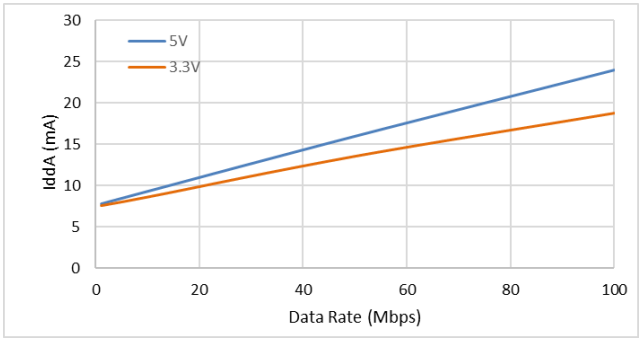

Figure 17. Si88243 Typical V_{DDA} Supply Current vs. Data Rate (5 V and 3.3 V Operation)

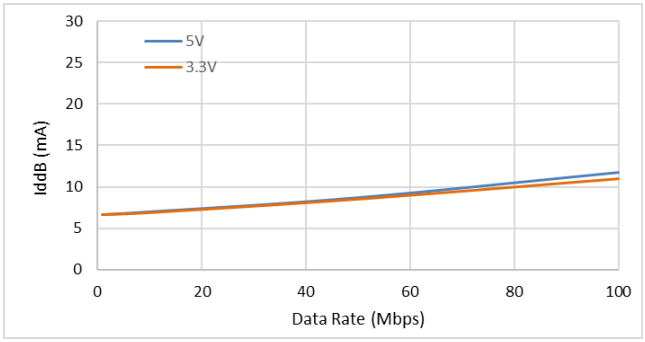

Figure 18. Si88243 Typical V_{DDB} Supply Current vs. Data Rate (5 V and 3.3 V Operation)

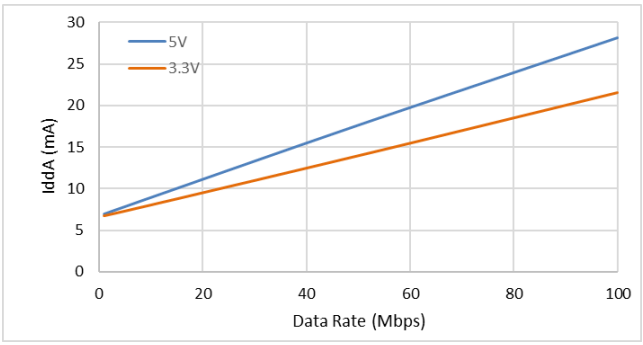

Figure 19. Si88244 Typical V_{DDA} Supply Current vs. Data Rate (5 V and 3.3 V Operation)

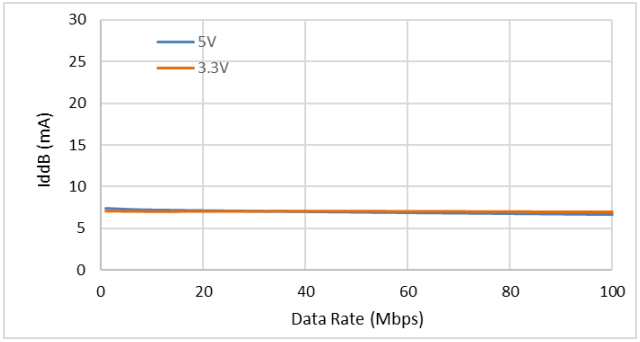

Figure 20. Si88244 Typical V_{DDB} Supply Current vs. Data Rate (5 V and 3.3 V Operation)

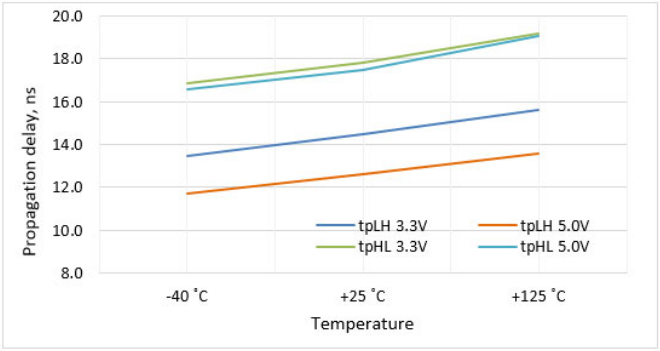

Figure 21. Propagation Delay vs. Temperature

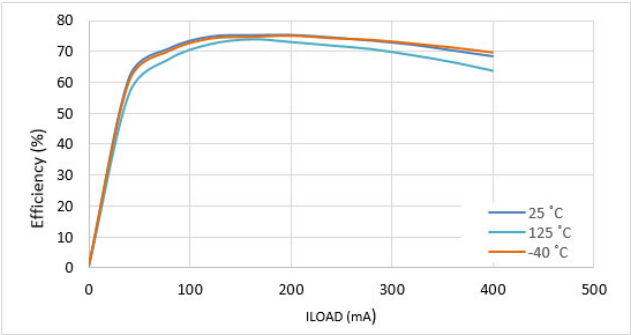

Figure 22. DC-DC Efficiency vs. Load Current over Temperature (3.3 V to 3.3 V)

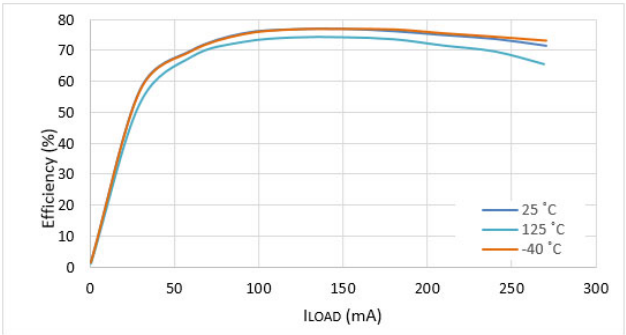

Figure 23. DC-DC Efficiency vs. Load Current over Temperature (3.3 V to 5.0 V)

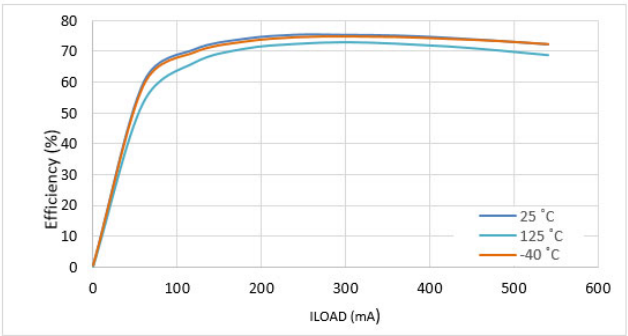

Figure 24. DC-DC Efficiency vs. Load Current over Temperature (5.0 V to 3.3 V)

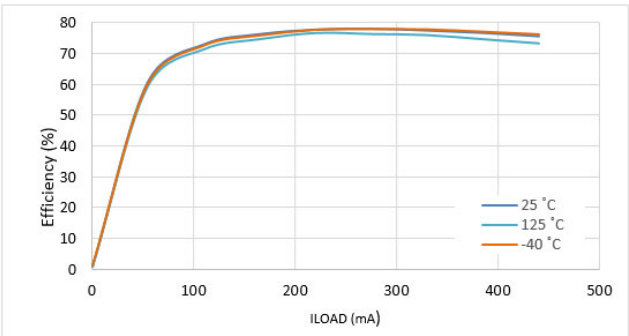

Figure 25. DC-DC Efficiency vs. Load Current over Temperature (5.0 V to 5.0 V)

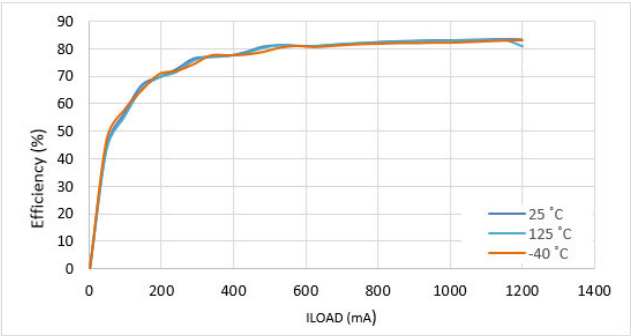

Figure 26. DC-DC Efficiency vs. Load Current over Temperature (24 V to 5.0 V)

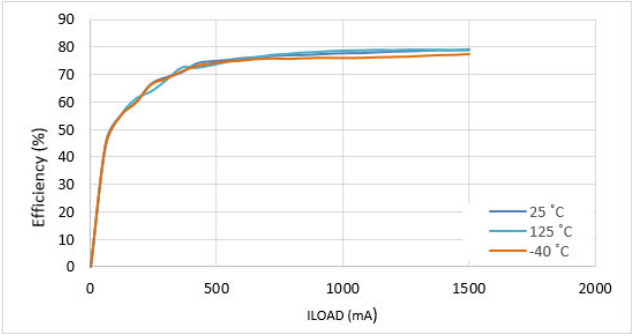

Figure 27. DC-DC Efficiency vs. Load Current over Temperature (24 V to 3.3 V)

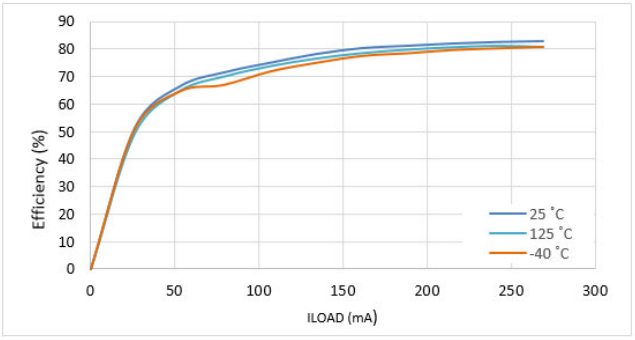

Figure 28. DC-DC Efficiency vs. Load Current over Temperature (12 V to 5.0 V)

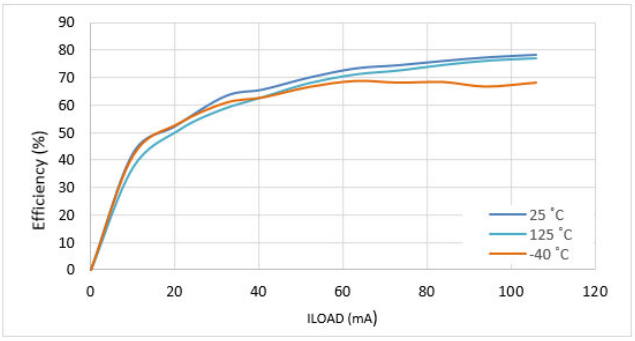

Figure 29. DC-DC Efficiency vs. Load Current over Temperature (7 V to 24 V)

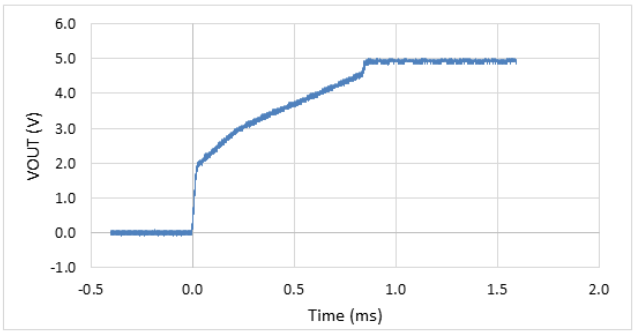

Figure 30. DC-DC 24 V to 5.0 V VOUT Startup vs.Time, No Load Current

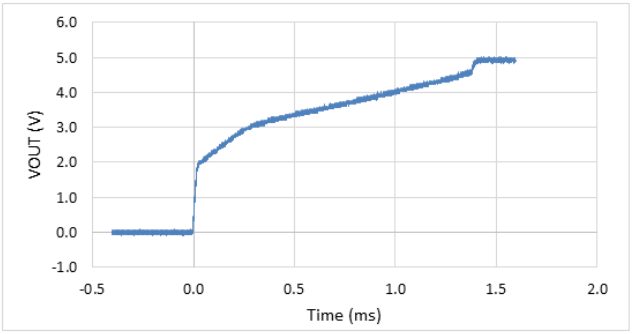

Figure 31. DC-DC 24 V to 5.0 V VOUT Startup vs.Time, 50 mA Load Current

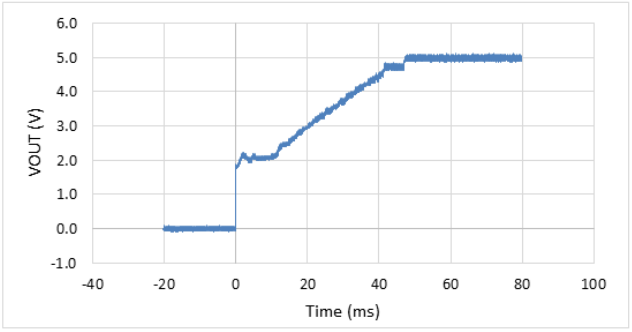

Figure 32. DC-DC 24 V to 5 V VOUT Startup vs.Time, 400 mA Load Current

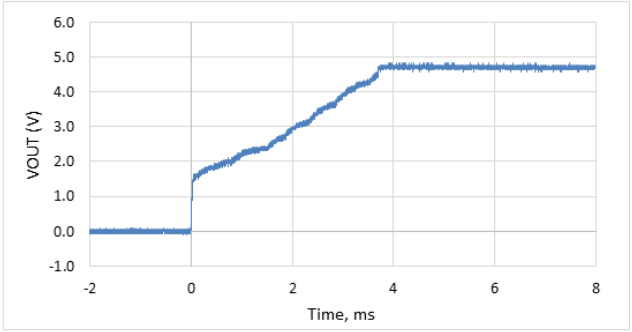

Figure 33. DC-DC 5 V to 5 V VOUT Startup vs.Time (No Load)

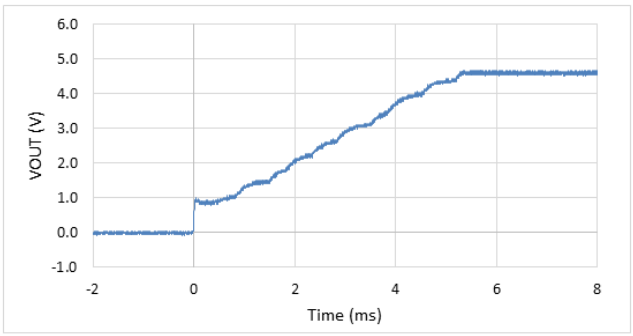

Figure 34. DC-DC 5 V to 5 V VOUT Startup vs.Time (50 mA Load Current)

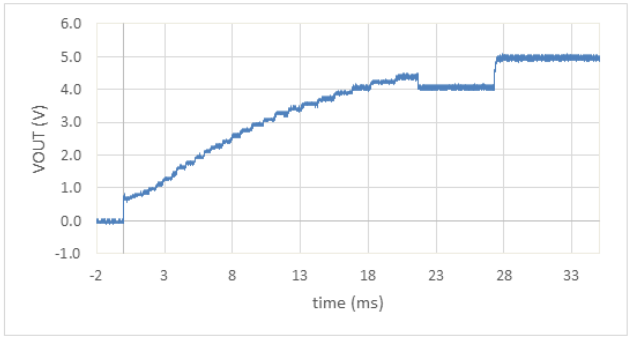

Figure 35. DC-DC 5 V to 5 V VOUT Startup vs.Time (400 mA Load Current)

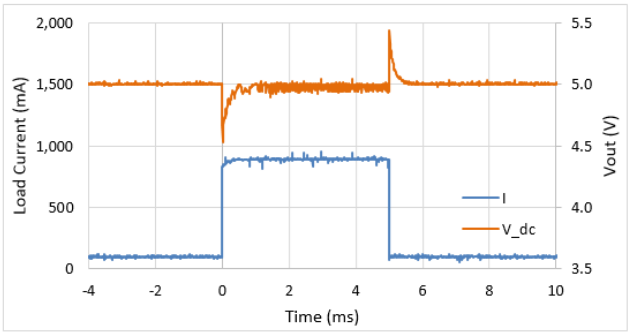

Figure 36. DC-DC 24 V to 5 V VOUT Load Transient Response (10% to 90% Load)

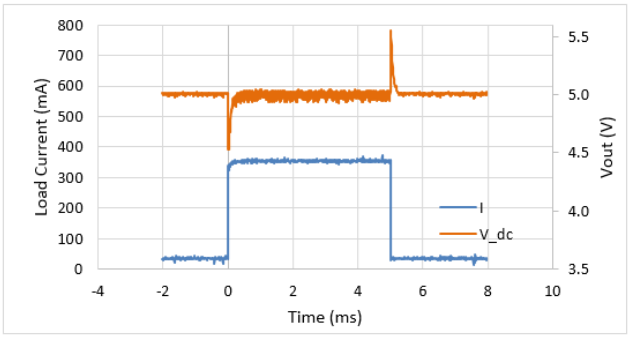

Figure 37. DC-DC 5 V to 5 V VOUT Load Transient Response (10% to 90% Load)

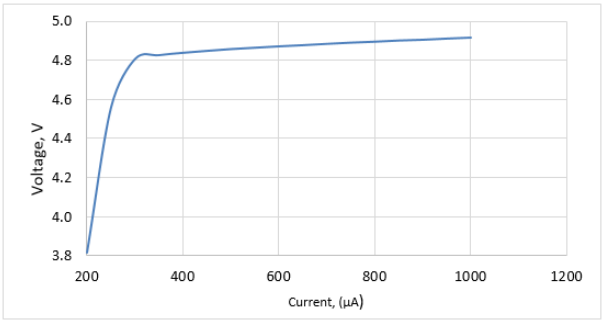

Figure 38. Typical I-V Curve for V_{REGA}/V_{REGB}

4. Electrical Specifications

Table 4. Absolute Maximum Ratings[1]

Parameter	Symbol	Min	Max	Unit
Storage Temperature	T_{STG}	–65	+150	°C
Junction Temperature	T_J	—	+150	°C
Input-side Supply Voltage	VDDA VDDP	–0.6	6.0	V
Output supply	VDDB	–0.6	6.0	V
Voltage on any Pin with respect to Ground	V_{IN}	–0.5	VDD + 0.5	V
Output Drive Current per Channel	I_O		10	mA
Input Current for V_{REGA}, V_{REGB}	I_{REG}	—	1	mA
Lead Solder Temperature (10 s)		—	260	°C
ESD per AEC-Q100	HBM	—	4	kV
	CDM	—	2	kV

1. Exposure to maximum rating conditions for extended periods may reduce device reliability. Exceeding any of the limits listed here may result in permanent damage to the device.

Table 5. Recommended Operating Conditions

Parameter	Symbol	Min	Typ	Max	Unit
Ambient Operating Temperature	T_A	–40	25	125	°C
Power Input Voltage	VDDP	3.0	—	5.5	V
Supply Voltage	VDDA	3.0	—	5.5	V
	VDDB	3.0	—	5.5	V

Table 6. Electrical Characteristics[1]

V_{IN} = 24 V; V_{DDA} = 4.3 V (see Figure 41, "Measurement Circuit for Converter Efficiency and Regulation for Si884xx, Si886xx," on page 29) for all Si8844x/64x; V_{DDA} = V_{DDP} = 3.0 to 5.5 V (see Figure 40, "Measurement Circuit for Converter Efficiency and Regulation for Si882xx, Si883xx," on page 28) for all Si8824x/34x; T_A = –40 to 125 °C unless otherwise noted.

Parameter	Symbol	Test Condition	Min	Typ	Max	Unit
DC/DC converter						
Switching frequency Si8824x, Si8844x	FSW		225	250	275	kHz
Switching frequency Si8834x, Si8864x	FSW	R_{FSW} = 23.3 kΩ FSW = 1025.5/(RFSW x CSS) CSS = 220 nF (see Figure 10 on page 13) (1% tolerance on BOM)	180	200	220	kHz
		R_{FSW} = 9.3 kΩ FSW = 1025.5/(RFSW x CSS) CSS = 220 nF (see Figure 10 on page 13) (1% tolerance on BOM)	450	500	550	kHz
		R_{FSW} = 5.18 kΩ, CSS = 220 nF (see Figure 10 on page 13)	810	900	990	kHz
VSNS voltage	VSNS	I_{LOAD} = 0 A	1.002	1.05	1.097	V
VSNS current offset	I_{offset}		–500	—	500	nA
Output voltage accuracy[2]		See Figure 40 on page 28 I_{LOAD} = 0 mA	–5	—	+5	%
Line regulation	ΔVOUT(line)/ ΔVDDP	See Figure 40 on page 28 I_{LOAD} = 50 mA VDDP varies from 4.5 to 5.5 V	—	1	—	mV/V
Load regulation	ΔVOUT(load)/ VOUT	See Figure 40 on page 28 I_{LOAD} = 50 to 400 mA	—	0.1	—	%
Output voltage ripple Si8824x, Si8834x Si8844x, Si8864x		I_{LOAD} = 100 mA See Figure 40 on page 28 See Figure 41 on page 29	—	100	—	mV p-p
Turn-on overshoot	ΔVOUT(start)	See Figure 40 on page 28 C_{IN} = C_{OUT} = 0.1 µF in parallel with 10 µF, I_{LOAD} = 0 A	—	2	—	%
Continuous output current **Si8824x, Si8834x** 5.0 V to 5.0 V 3.3 V to 3.3 V 3.3 V to 5.0 V 5.0 V to 3.3 V **Si8844x, Si8864x** 24.0 to 5.0 V 24.0 to 3.0 V	I_{LOAD}(max)	See Figure 40 on page 28 See Figure 41 on page 29	—	 400 400 250 550 1000 1500	—	mA
Cycle-by-cycle average current limit Si8824x, Si8834x	ILIM	See Figure 40 on page 28 Output short circuited	—	3	—	A
No load supply current IDDP Si8824x, Si8834x	IDDPQ_DCDC[3]	See Figure 40 on page 28 VDDP = VDDA = 5 V	—	30	—	mA
No load supply current IDDA Si8824x, Si8834x	IDDAQ_DCDC[4]	See Figure 40 on page 28 VDDP = VDDA = 5 V	—	5.7	—	mA
No load supply current IDDP Si8844x, Si8864x	IDDPQ_DCDC[3]	See Figure 41 on page 29 V_{IN} = 24 V	—	0.8	—	mA

Table 6. Electrical Characteristics[1] (Continued)

V_{IN} = 24 V; V_{DDA} = 4.3 V (see Figure 41, "Measurement Circuit for Converter Efficiency and Regulation for Si884xx, Si886xx," on page 29) for all Si8844x/64x; V_{DDA} = V_{DDP} = 3.0 to 5.5 V (see Figure 40, "Measurement Circuit for Converter Efficiency and Regulation for Si882xx, Si883xx," on page 28) for all Si8824x/34x; T_A = –40 to 125 °C unless otherwise noted.

Parameter	Symbol	Test Condition	Min	Typ	Max	Unit
No load supply current IDDA Si8844x, Si8864x	IDDAQ_DCDC[4]	See Figure 41 on page 29 V_{IN} = 24 V	—	5.8	—	mA
Peak efficiency Si8824x, Si8834x Si8844x, Si8864x	η	Figure 40 on page 28 Figure 41 on page 29	—	78 83	—	%
Voltage regulator reference voltage Si8844x, Si8864x	V_{REGA}, V_{REGB}	I_{REG} = 600 µA See Figure 25 on page 19 for typical I–V curve	—	4.8	—	V
VREG tempco	K_{TVREG}		—	–0.4	—	mV/°C
VREG input current	I_{REG}		350	—	950	µA
Soft start time, full load Si8824x, Si8844x Si8834x, Si8864x	t_{SST}	See Figures Figure 30 on page 20 through Figure 35 on page 21 for typical soft start times over load conditions.	—	25 50	—	ms
Restart delay from overtemperature event	t_{OTP}		—	21	—	s
Digital isolator						
VDD undervoltage threshold	VDD_{UV+}	VDDA, VDDB rising	—	2.7	—	V
	$VDD_{UV–}$	VDDA, VDDB falling	—	2.6	—	V
VDD undervoltage hysteresis	VDD_{HYS}		—	100	—	mV
Positive-going input threshold	V_{T+}	All inputs rising	—	1.7	—	V
Negative-going input threshold	$V_{T–}$	All inputs falling	—	1.2	—	V
Input hysteresis	V_{HYS}		—	0.4	—	V
High level input voltage	V_{IH}		2.0	—	—	V
Low level input voltage	V_{IL}		—	—	0.8	V
High level output voltage	V_{OH}	I_{OH} = –4 mA	V_{DDA}, V_{DDB} – 0.4	—	—	V
Low level output voltage	V_{OL}	I_{OL} = 4 mA	—	—	0.4	V
Input leakage current	I_L		–10	—	+10	µA
Output impedance[5]	Z_O		—	50	—	Ω

Table 6. Electrical Characteristics[1] (Continued)

V_{IN} = 24 V; V_{DDA} = 4.3 V (see Figure 41, "Measurement Circuit for Converter Efficiency and Regulation for Si884xx, Si886xx," on page 29) for all Si8844x/64x; V_{DDA} = V_{DDP} = 3.0 to 5.5 V (see Figure 40, "Measurement Circuit for Converter Efficiency and Regulation for Si882xx, Si883xx," on page 28) for all Si8824x/34x; T_A = –40 to 125 °C unless otherwise noted.

Parameter	Symbol	Test Condition	Min	Typ	Max	Unit
Supply current, C_{LOAD} = 15 pF						
DC, VDDx = 3.3 V ± 10%						
Si88x40ED						
I_{DDA}		All inputs = 0	7.5	10.5	13.5	
I_{DDB}		All inputs = 0	3.5	5.5	7.5	mA
I_{DDA}		All inputs = 1	1.5	4.5	7.8	
I_{DDB}		All inputs = 1	2.5	4.5	6.5	
Si88x41ED						
I_{DDA}		All inputs = 0	6.7	9.7	12.7	
I_{DDB}		All inputs = 0	5.0	7.0	9.0	mA
I_{DDA}		All inputs = 1	1.5	4.5	7.8	
I_{DDB}		All inputs = 1	2.5	4.5	6.5	
Si88x42ED						
I_{DDA}		All inputs = 0	5.2	8.2	11.2	
I_{DDB}		All inputs = 0	6.1	8.1	10.1	mA
I_{DDA}		All inputs = 1	1.5	4.5	7.8	
I_{DDB}		All inputs = 1	2.5	4.5	6.5	
Si88x43ED						
I_{DDA}		All inputs = 0	3.7	6.7	9.7	
I_{DDB}		All inputs = 0	7.5	9.5	11.5	mA
I_{DDA}		All inputs = 1	1.5	4.5	7.8	
I_{DDB}		All inputs = 1	2.5	4.5	6.5	
Si88x44ED						
I_{DDA}		All inputs = 0	1.9	4.9	7.9	
I_{DDB}		All inputs = 0	9.0	11.0	13.0	mA
I_{DDA}		All inputs = 1	1.5	4.5	7.8	
I_{DDB}		All inputs = 1	2.5	4.5	6.5	
Si88x40BD						
I_{DDA}		All inputs = 0	1.5	4.5	7.8	
I_{DDB}		All inputs = 0	2.5	4.5	6.5	mA
I_{DDA}		All inputs = 1	7.5	10.5	13.5	
I_{DDB}		All inputs = 1	3.5	5.5	7.5	
Si88x41BD						
I_{DDA}		All inputs = 0	1.5	4.5	7.8	
I_{DDB}		All inputs = 0	2.5	4.5	6.5	mA
I_{DDA}		All inputs = 1	6.7	9.7	12.7	
I_{DDB}		All inputs = 1	5.0	7.0	9.0	
Si88x42BD						
I_{DDA}		All inputs = 0	1.5	4.5	7.8	
I_{DDB}		All inputs = 0	2.5	4.5	6.5	mA
I_{DDA}		All inputs = 1	5.2	8.2	11.2	
I_{DDB}		All inputs = 1	6.1	8.1	10.1	
Si88x43BD						
I_{DDA}		All inputs = 0	1.5	4.5	7.8	
I_{DDB}		All inputs = 0	2.5	4.5	6.5	mA
I_{DDA}		All inputs = 1	3.7	6.7	9.7	
I_{DDB}		All inputs = 1	7.5	9.5	11.5	
Si88x44BD						
I_{DDA}		All inputs = 0	1.5	4.5	7.8	
I_{DDB}		All inputs = 0	2.5	4.5	6.5	mA
I_{DDA}		All inputs = 1	1.9	4.9	7.9	
I_{DDB}		All inputs = 1	9.0	11.0	13.0	

Table 6. Electrical Characteristics[1] (Continued)

V_{IN} = 24 V; V_{DDA} = 4.3 V (see Figure 41, "Measurement Circuit for Converter Efficiency and Regulation for Si884xx, Si886xx," on page 29) for all Si8844x/64x; V_{DDA} = V_{DDP} = 3.0 to 5.5 V (see Figure 40, "Measurement Circuit for Converter Efficiency and Regulation for Si882xx, Si883xx," on page 28) for all Si8824x/34x; T_A = –40 to 125 °C unless otherwise noted.

Parameter	Symbol	Test Condition	Min	Typ	Max	Unit
Supply Current, C_{LOAD} = 15 pF						
DC, VDDx = 5 V ± 10%						
Si88x40ED						
I_{DDA}		All inputs = 0	10.3	13.3	16.3	mA
I_{DDB}		All inputs = 0	3.8	5.8	7.8	
I_{DDA}		All inputs = 1	4.0	7.0	10.0	
I_{DDB}		All inputs = 1	2.8	4.8	6.8	
Si88x41ED						
I_{DDA}		All inputs = 0	9.0	12.0	15.0	mA
I_{DDB}		All inputs = 0	5.0	7.0	9.0	
I_{DDA}		All inputs = 1	4.0	7.0	10.0	
I_{DDB}		All inputs = 1	2.8	4.8	6.8	
Si88x42ED						
I_{DDA}		All inputs = 0	7.8	10.8	12.8	mA
I_{DDB}		All inputs = 0	6.3	8.3	10.3	
I_{DDA}		All inputs = 1	4.0	7.0	10.0	
I_{DDB}		All inputs = 1	2.8	4.8	6.8	
Si88x43ED						
I_{DDA}		All inputs = 0	6.5	9.5	12.5	mA
I_{DDB}		All inputs = 0	7.5	9.5	11.5	
I_{DDA}		All inputs = 1	4.0	7.0	10.0	
I_{DDB}		All inputs = 1	2.8	4.8	6.8	
Si88x44ED						
I_{DDA}		All inputs = 0	4.3	7.3	10.3	mA
I_{DDB}		All inputs = 0	9.0	11.0	13.0	
I_{DDA}		All inputs = 1	4.0	7.0	10.0	
I_{DDB}		All inputs = 1	2.8	4.8	6.8	
Si88x40BD						
I_{DDA}		All inputs = 0	4.0	7.0	10.0	mA
I_{DDB}		All inputs = 0	2.8	4.8	6.8	
I_{DDA}		All inputs = 1	10.3	13.3	16.3	
I_{DDB}		All inputs = 1	3.8	5.8	7.8	
Si88x41BD						
I_{DDA}		All inputs = 0	4.0	7.0	10.0	mA
I_{DDB}		All inputs = 0	2.8	4.8	6.8	
I_{DDA}		All inputs = 1	9.0	12.0	15.0	
I_{DDB}		All inputs = 1	5.0	7.0	9.0	
Si88x42BD						
I_{DDA}		All inputs = 0	4.0	7.0	10.0	mA
I_{DDB}		All inputs = 0	2.8	4.8	6.8	
I_{DDA}		All inputs = 1	7.8	10.8	12.8	
I_{DDB}		All inputs = 1	6.3	8.3	10.3	
Si88x43BD						
I_{DDA}		All inputs = 0	4.0	7.0	10.0	mA
I_{DDB}		All inputs = 0	2.8	4.8	6.8	
I_{DDA}		All inputs = 1	6.5	9.5	12.5	
I_{DDB}		All inputs = 1	7.5	9.5	11.5	
Si88x44BD						
I_{DDA}		All inputs = 0	4.0	7.0	10.0	mA
I_{DDB}		All inputs = 0	2.8	4.8	6.8	
I_{DDA}		All inputs = 1	4.3	7.3	10.3	
I_{DDB}		All inputs = 1	9.0	11.0	13.0	

Table 6. Electrical Characteristics[1] (Continued)

V_{IN} = 24 V; V_{DDA} = 4.3 V (see Figure 41, "Measurement Circuit for Converter Efficiency and Regulation for Si884xx, Si886xx," on page 29) for all Si8844x/64x; V_{DDA} = V_{DDP} = 3.0 to 5.5 V (see Figure 40, "Measurement Circuit for Converter Efficiency and Regulation for Si882xx, Si883xx," on page 28) for all Si8824x/34x; T_A = –40 to 125 °C unless otherwise noted.

Parameter	Symbol	Test Condition	Min	Typ	Max	Unit
Timing Characteristics						
Data Rate			0	—	100	Mbps
Minimum Pulse Width			10	—	—	ns
Propagation Delay	t_{PHL}	See Figure 39 on page 27 VDDx = 3.3 V	12.0	17.0	22.0	ns
Propagation Delay	t_{PLH}	See Figure 39 on page 27 VDDx = 3.3 V	11.0	15.0	20.0	ns
Propagation Delay	t_{PHL}	See Figure 39 on page 27 VDDx = 5.0 V	13.0	18.0	23.0	ns
Propagation Delay	t_{PLH}	See Figure 39 on page 27 VDDx = 5.0 V	10.0	13.0	18.0	ns
Pulse Width Distortion $\lvert t_{PLH} - t_{PHL} \rvert$	PWD	See Figure 39 on page 27 VDDx = 3.3 V	—	2.5	5.0	ns
Pulse Width Distortion $\lvert t_{PLH} - t_{PHL} \rvert$	PWD	See Figure 39 on page 27 VDDx = 5.0 V	—	4.5	7.0	ns
Propagation Delay Skew[6]	$t_{PSK(P-P)}$		—	3.0	10.0	ns
Channel-Channel Skew	t_{PSK}		—	2.0	4.0	ns
Output Rise Time	t_r	C_{LOAD} = 15 pF	—	2.5	—	ns
Output Fall Time	t_f	C_{LOAD} = 15 pF	—	2.5	—	ns
Common Mode Transient Immunity	CMTI	V_I = VDDx or 0 V V_{CM} = 1500 V See Figure 42 on page 29	40	100	—	kV/µs
Startup Time[7]	t_{SU}		—	55	—	µs

1. Over recommended operating conditions as noted in Table 5, "Recommended Operating Conditions," on page 22.
2. VOUT = VSNS x (1 + R1/R2) + R1 x I_{offset}
3. VDDP current needed for dc-dc circuits.
4. VDDA current needed for dc-dc circuits.
5. The nominal output impedance of an isolator driver channel is approximately 50 Ω, ±40%, which is a combination of the value of the on-chip series termination resistor and channel resistance of the output driver FET. When driving loads where transmission line effects will be a factor, output pins should be appropriately terminated with controlled impedance PCB traces.
6. $t_{PSK(P-P)}$ is the magnitude of the difference in propagation delay times measured between different units operating at the same supply voltages, load, and ambient temperature
7. Startup time is the time period from when the UVLO threshold is exceeded to valid data at the output.

ESD Handling: *Industry-standard ESD handling precautions must be adhered to at all times to avoid damage to this device.*

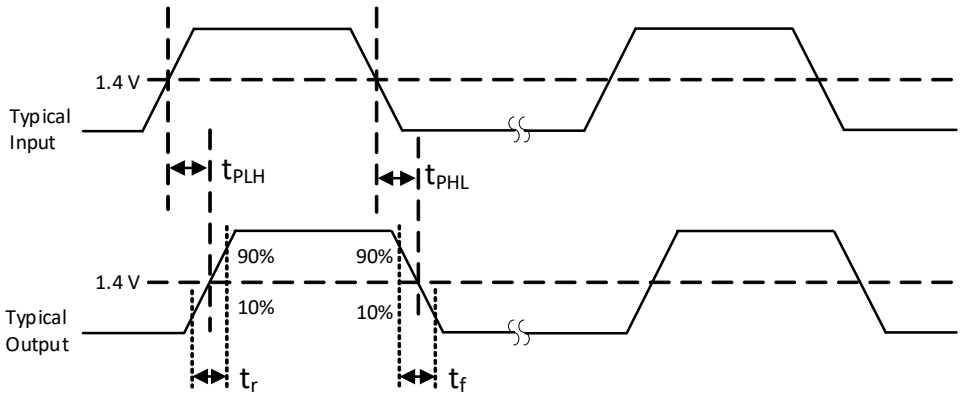

Figure 39. Propagation Delay Timing for Digital Channels

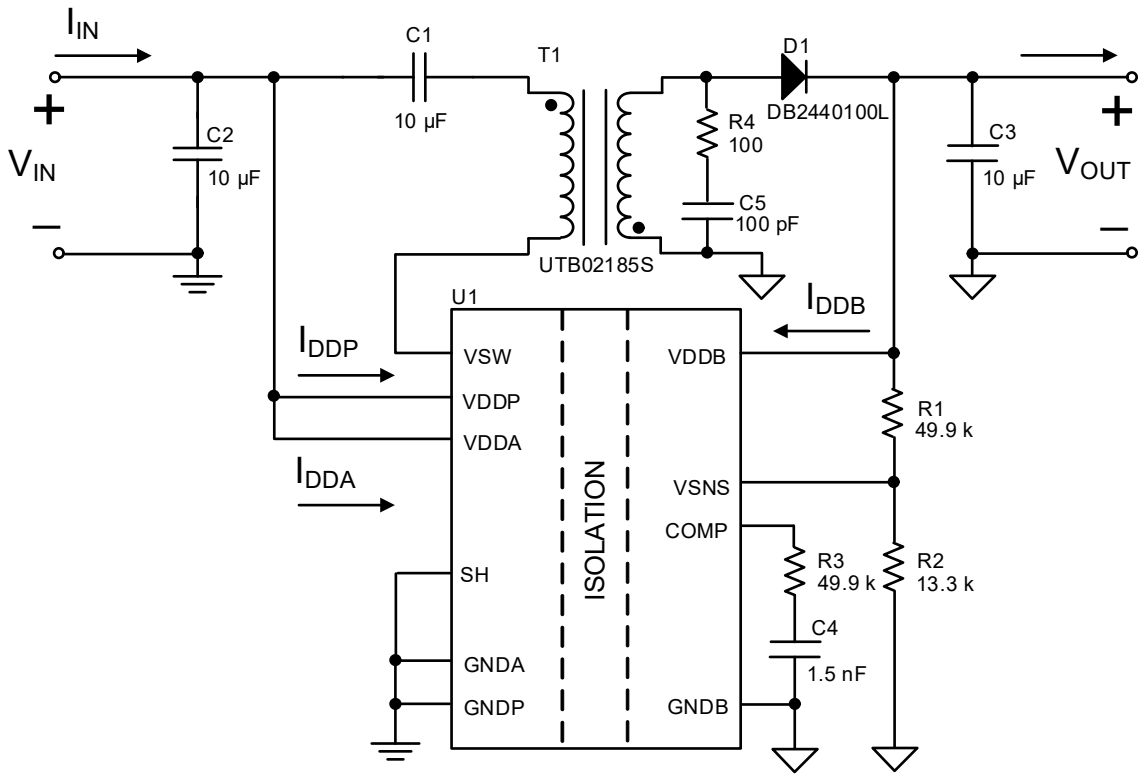

Figure 40. Measurement Circuit for Converter Efficiency and Regulation for Si882xx, Si883xx

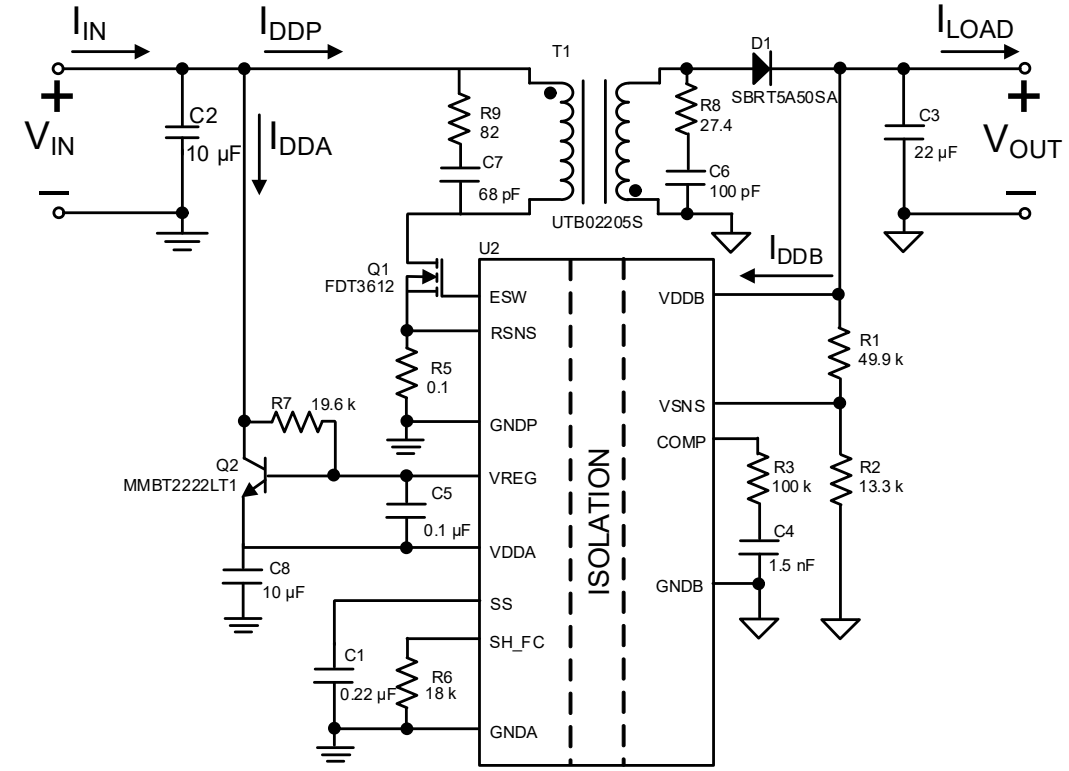

Figure 41. Measurement Circuit for Converter Efficiency and Regulation for Si884xx, Si886xx

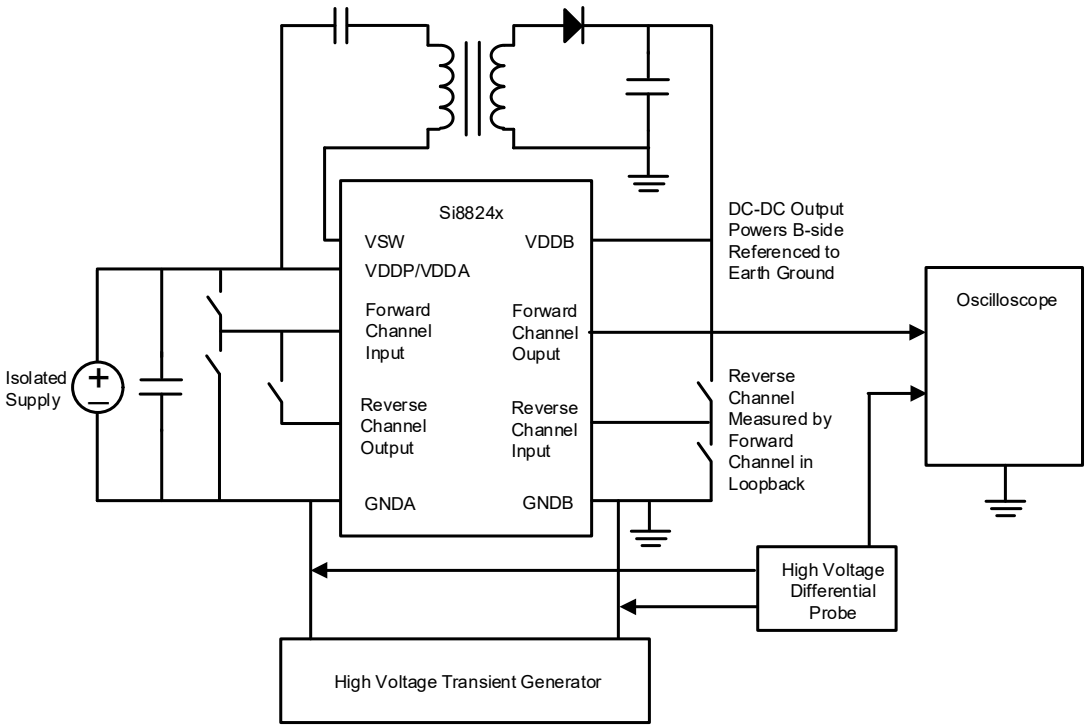

Figure 42. Common-Mode Transient Immunity Test Circuit

4.1. Safety Certifications and Specifications

Table 7. Regulatory Information (Pending)[1]

CSA
The Si88xx is certified under CSA. For more details, see Master Contract Number 232873.
62368-1: Up to 600 V_{RMS} reinforced insulation working voltage; up to 1000 V_{RMS} basic insulation working voltage.
VDE
The Si88xx is certified under VDE. For more details, see File 5028467.
60747-17: Up to 1414 Vpeak for basic insulation working voltage.
62368-1: Conforms to standard. See statement of conformity.
UL
The Si88xx is certified under UL1577 component recognition program. For more details, see File E257455.
Rated up to 5000 V_{RMS} V_{ISO} isolation voltage for basic protection.
CQC
The Si88xx is certified under GB4943.1.
Rated up to 250 V_{RMS} reinforced insulation working voltage at 5000 meters tropical climate.

1. For more information, see "8. Ordering Guide" on page 40.

Table 8. Insulation and Safety-Related Specifications

Parameter	Symbol	Test Condition	Value	Unit
			WB SOIC-20, WB SOIC-24	
Nominal External Air Gap (Clearance)	CLR		7.6	mm
Nominal External Tracking (Creepage)	CRP		7.6	mm
Minimum Internal Gap (Internal Clearance)	DTI		0.016	mm
Tracking Resistance	PTI or CTI	IEC60112	600	V_{RMS}
Erosion Depth	ED		0.019	mm
Resistance (Input-Output)[1]	R_{IO}	Test voltage = 500 V, 25°C	10^{12}	Ω
Capacitance (Input-Output)[1]	C_{IO}	f = 1 MHz	1.4	pF
Input Capacitance[2]	C_I		4.0	pF

1. To determine resistance and capacitance, the Si88xx is converted into a 2-terminal device. All pins on input side are shorted together to form the first terminal, and similarly, all pins on the output side are shorted together to form the second terminal. The parameters are then measured between these two terminals.
2. Measured from input to ground.

Table 9. IEC 60664-1 Ratings

Parameter	Test Condition	Specification
		WB SOIC-20, WB SOIC-24
Material Group		I
Overvoltage Category	Rated Mains Voltage ≤ 150 V_{RMS}	I-IV
	Rated Mains Voltage ≤ 300 V_{RMS}	I-IV
	Rated Mains Voltage ≤ 600 V_{RMS}	I-III
	Rated Mains Voltage ≤ 1000 V_{RMS}	I-II

Table 10. IEC60747-17 Insulation Characteristics[1]

Parameter	Symbol	Test Condition	Characteristic	Unit
			WB SOIC-20, WB SOIC-24	
Maximum Working Isolation Voltage	V_{IOWM}	According to Time-Dependent Dielectric Breakdown (TDDB) Test	1000	V_{RMS}
Maximum Repetitive Isolation Voltage	V_{IORM}	According to Time-Dependent Dielectric Breakdown (TDDB) Test	1414	V_{peak}
Apparent charge	q_{pd}	Method b: At routine test (100% production) and preconditioning (type test); V_{ini} = 1.2 x V_{IOTM}, tini = 1 s; $V_{pd(m)}$ = 1.875 x V_{IORM}, tm = 1 s (method b1) or $V_{pd(m)}$ = V_{ini}, tm = tini (method b2)	≤ 5	pC
Maximum Transient Isolation Voltage	V_{IOTM}	V_{TEST} = V_{IOTM}, t = 60 s (qualification); V_{TEST} = 1.2 x V_{IOTM}, t = 1 s (100% production)	C = 5302 D = 7070	V_{peak}
Maximum Surge Isolation Voltage	V_{IOSM}	Tested in oil with 1.3 x V_{IMP} and 1.2 µs/50 µs profile	8000	V_{peak}
Maximum Impulse Voltage	V_{IMP}	Tested in air with 1.2 µs/50 µs profile	6150	V_{peak}
Isolation Resistance	R_{IO_S}	T_{AMB} = T_S, V_{IO} = 500 V	$>10^9$	Ω
Pollution Degree			2	
Climatic category			40/125/21	

1. This coupler is suitable for “basic electrical insulation” only within the maximum operating ratings. Compliance with the safety ratings shall be ensured by means of suitable protective circuits.

Table 11. UL 1577 Insulation Characteristics

Parameter	Symbol	Test Condition	Characteristic	Unit
Maximum withstanding isolation voltage	V_{ISO}	V_{TEST} = V_{ISO}, t = 60 s (qualification); V_{TEST} = 1.2 x V_{ISO}, t = 1 s (100% production)	C = 3750 D = 5000	V_{RMS}

Table 12. IEC60747-17 Safety Limiting Values[1]

Parameter	Symbol	Test Condition	WB SOIC-20, WB SOIC-24	Unit
Safety temperature	T_S	θ_{JA} = 55 °C/W (WB SOIC-20/24), V_{DD} = 5.5 V, T_J = 150 °C, T_A = 25 °C	150	°C
Safety input, output, or supply current	I_S		413	mA
Safety input, output, or total power	P_S		2.27	W

1. Maximum value allowed in the event of a failure. Refer to the thermal derating curve in Figure 43 on page 32.

Table 13. Thermal Characteristics

Parameter	Symbol	WB SOIC-20, WB SOIC-24	Unit
IC Junction-to-Air Thermal Resistance	θ_{JA}	55	°C/W

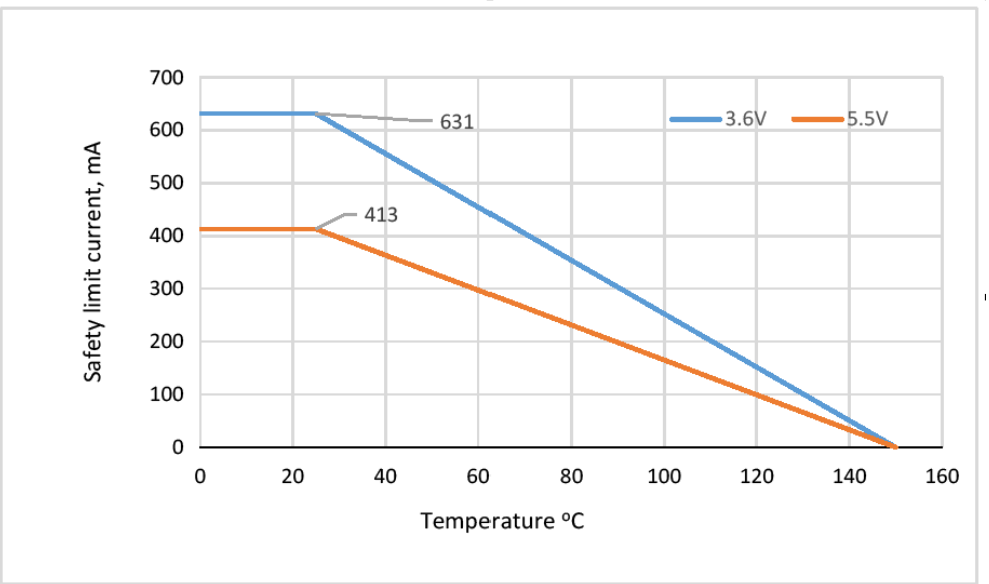

Figure 43. WB SOIC-20/24 Thermal Derating Curve (Dependence of Safety Limiting Values)

4.2. Calculating Total Current Consumption

Use the following guidelines to calculate dynamic supply current:

$$IDD(ac) = (C_L) \times (V) \times \left(\frac{D}{2}\right) \times 1E^{-3}$$

Where:
IDD(ac) is the dynamic component of current, per output channel, in mA.
D is the data-rate of that channel, in Mbps.
C_L is the load capacitance connected to the output, in pF.
V is the VDD on the output side, in V.

Equation 1.

For example, for the Si88x42ED-IS, the total current can be calculated as follows:

The average dc $I_{DDA/B}$ is the average of the dc current values at input 0 and input 1, for VDDA and VDDB, respectively, as stated in the table below for Si88x42ED.

CL (pF)	VDD (V)	Data-rate (MBps)	IDD(ac) per Output Channel (mA)	Total I_{DDA} (ac) (mA)	Total I_{DDB} (ac) (mA)	Average DC I_{DDA} (mA)	Average DC I_{DDB} (mA)	Total I_{DDA} (mA)	Total I_{DDB} (mA)
20	3.3	10	0.33	0.66	0.66	9.35	8.3	10.01	8.96

5. Package Outlines

5.1. Package Outline: 20-Pin Wide-Body SOIC

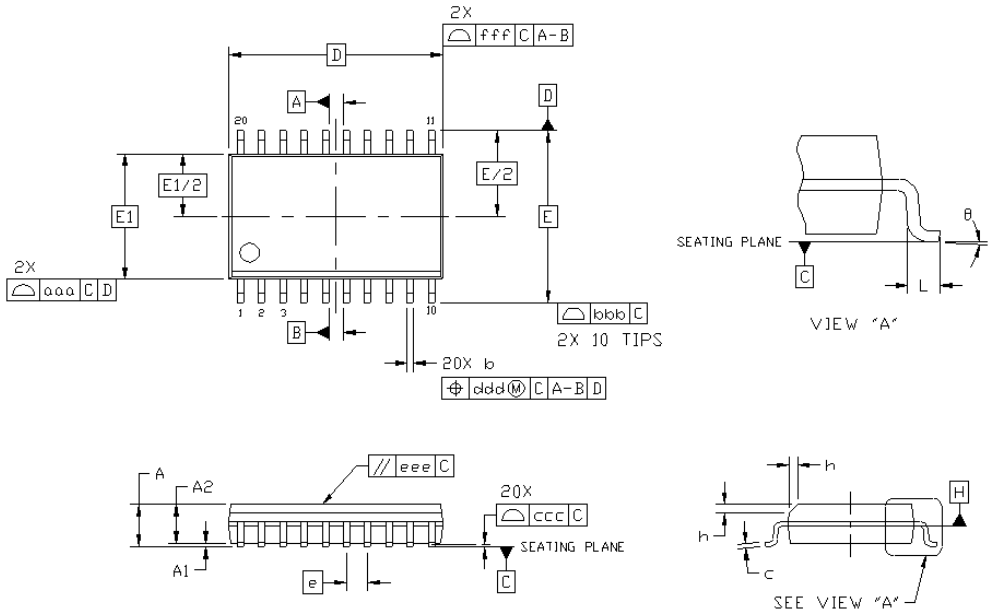

Figure 44. 20-Pin Wide-Body SOIC Package Diagram

Table 14. 20-Pin Wide-Body SOIC Package Diagram Dimensions[1,2,3,4]

Dimension	Min	Max
A	—	2.65
A1	0.10	0.30
A2	2.05	—
b	0.31	0.51
c	0.20	0.33
D	12.80 BSC	
E	10.30 BSC	
E1	7.50 BSC	
e	1.27 BSC	
L	0.40	1.27
h	0.25	0.75
θ	0°	8°
aaa	—	0.10
bbb	—	0.33
ccc	—	0.10
ddd	—	0.25
eee	—	0.10
fff	—	0.20

1. All dimensions shown are in millimeters (mm) unless otherwise noted.
2. Dimensioning and Tolerancing per ANSI Y14.5M-1994.
3. This drawing conforms to JEDEC Outline MS-013, Variation AC.
4. Recommended reflow profile per JEDEC J-STD-020C specification for small body, lead-free components.

5.2. Package Outline: 24-Pin Wide-Body SOIC

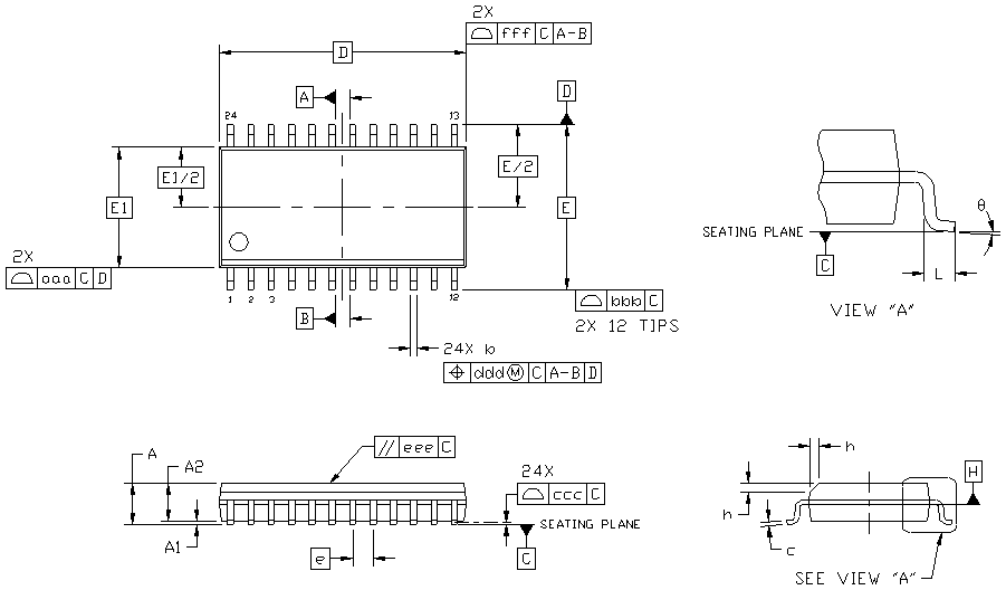

Figure 45. 24-Pin Wide-Body SOIC Package Diagram

Table 15. 24-Pin Wide-Body SOIC Package Diagram Dimensions[1,2,3,4]

Dimension	Min	Max
A	—	2.65
A1	0.10	0.30
A2	2.05	—
b	0.31	0.51
c	0.20	0.33
D	15.40 BSC	
E	10.30 BSC	
E1	7.50 BSC	
e	1.27 BSC	
L	0.40	1.27
h	0.25	0.75
θ	0°	8°
aaa	—	0.10
bbb	—	0.33
ccc	—	0.10
ddd	—	0.25
eee	—	0.10
fff	—	0.20

1. All dimensions shown are in millimeters (mm) unless otherwise noted.
2. Dimensioning and Tolerancing per ANSI Y14.5M-1994.
3. This drawing conforms to JEDEC Outline MS-013, Variation AD.
4. Recommended reflow profile per JEDEC J-STD-020 specification for small body, lead-free components.

6. Land Patterns

6.1. Land Pattern: 20-Pin SOIC

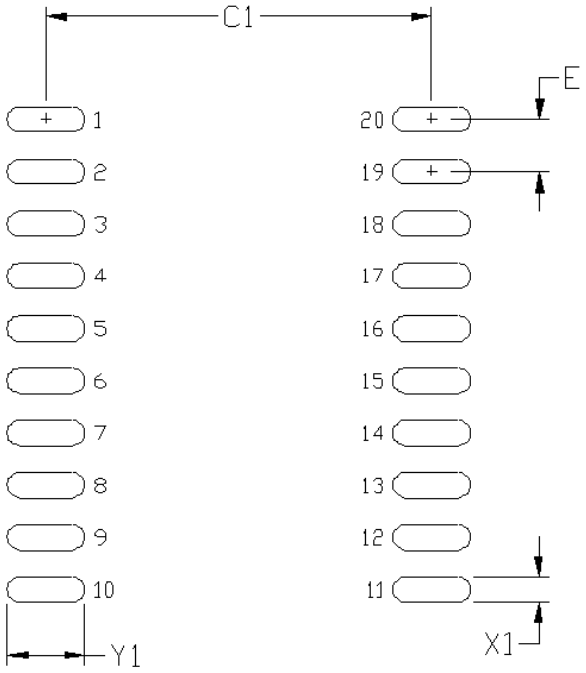

Figure 46. 20-Pin SOIC PCB Land Pattern Drawing

Table 16. 20-Pin SOIC PCB Land Pattern Drawing Dimensions[1,2]

Dimension	mm
C1	9.40
E	1.27
X1	0.60
Y1	1.90

1. This Land Pattern Design is based on IPC-7351 design guidelines for Density Level B (Median Land Protrusion).
2. All feature sizes shown are at Maximum Material Condition (MMC), and a card fabrication tolerance of 0.05 mm is assumed.

6.2. Land Pattern: 24-Pin SOIC

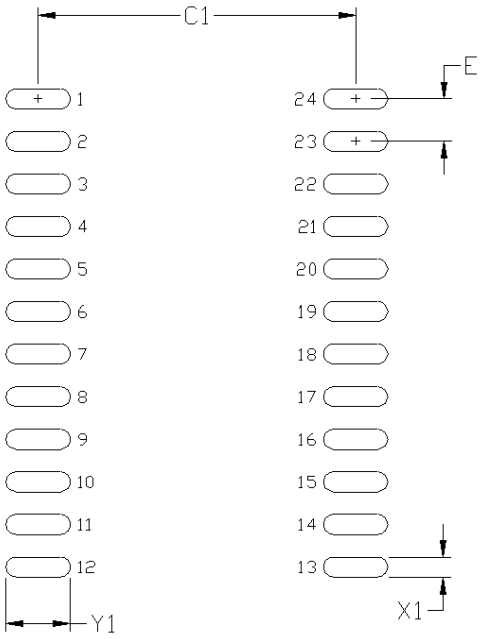

Figure 47. 24-Pin SOIC PCB Land Pattern Drawing

Table 17. 24-Pin SOIC PCB Land Pattern Drawing Dimensions[1,2]

Dimension	mm
C1	9.40
E	1.27
X1	0.60
Y1	1.90

1. This Land Pattern Design is based on IPC-7351 design guidelines for Density Level B (Median Land Protrusion).
2. All feature sizes shown are at Maximum Material Condition (MMC), and a card fabrication tolerance of 0.05 mm is assumed.

7. Top Markings

7.1. Si88x4x Top Marking: 20-Pin Wide-Body SOIC

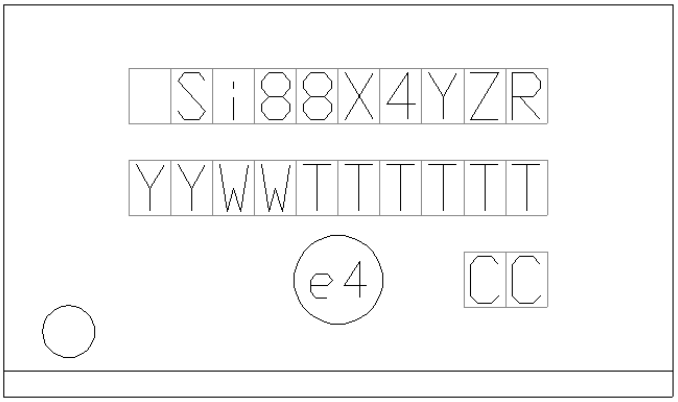

Figure 48. 20-Pin Wide-Body SOIC Top Marking

Table 18. 20-Pin Wide-Body SOIC Top Marking Explanation

Line 1 Marking:	Base Part Number Ordering Options See 8. Ordering Guide for more information.	Si88x4 = 5 kV rated 4 channel digital isolator with dc-dc converter X = 2, 4 2 = dc-dc shutdown 4 = External FET Y = Number of reverse channels Z = E, B E = default high B = default low R = C, D C = 3.75 kV_{RMS} D = 5 kV_{RMS} isolation rating
Line 2 Marking:	YY = Year WW = Workweek	Assigned by the Assembly House. Corresponds to the year and workweek of the mold date.
	TTTTTT = Mfg Code	Manufacturing Code from Assembly Purchase Order form.
Line 3 Marking:	Circle = 1.5 mm Diameter (Center Justified)	“e4” Pb-Free Symbol
	Country of Origin ISO Code Abbreviation	TW = Taiwan

7.2. Si88x4x Top Marking: 24-Pin Wide-Body SOIC

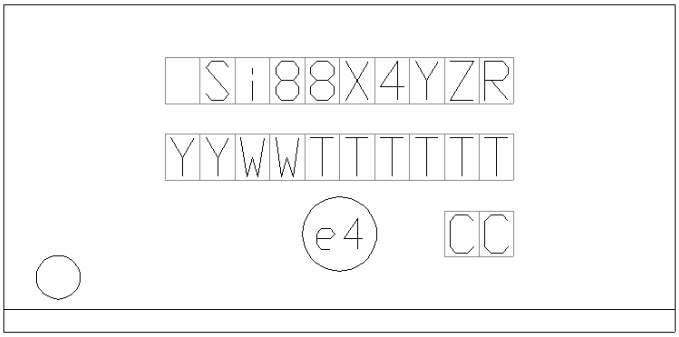

Figure 49. 24-Pin Wide-Body SOIC Top Marking

Table 19. 24-Pin Wide-Body SOIC Top Marking Explanation

Line 1 Marking:	Base Part Number Ordering Options See 8. Ordering Guide for more information.	Si88x4 = 5kV rated 4-channel digital isolator with dc-dc converter X = 3, 6 3 = Full-featured dc-dc with internal FET 6 = Full-featured dc-dc with external FET Y = Number of reverse channels Z = E, B E = default high B = default low R = C, D C = 3.75 kV_{RMS} D = 5 kV_{RMS} isolation rating
Line 2 Marking:	YY = Year WW = Workweek	Assigned by the Assembly House. Corresponds to the year and work-week of the mold date.
	TTTTTT = Mfg Code	Manufacturing Code from Assembly Purchase Order form.
Line 3 Marking:	Circle = 1.5 mm Diameter (Center Justified)	“e4” Pb-Free Symbol
	Country of Origin ISO Code Abbreviation	TW = Taiwan

8. Ordering Guide

8.1. Industrial and Automotive Grade OPNs

Industrial-grade devices (part numbers having an “-I” in their suffix) are built using well-controlled, high-quality manufacturing flows to ensure robustness and reliability. Qualifications are compliant with AEC-Q100, and defect reduction methodologies are used throughout definition, design, evaluation, qualification, and mass production steps.

Automotive-grade devices (part numbers having an “-A” in their suffix) are built using automotive-specific flows at all steps in the manufacturing process to ensure robustness and low defectivity. These devices are supported with AIAG-compliant Production Part Approval Process (PPAP) documentation, and feature International Material Data System (IMDS) and China Automotive Material Data System (CAMDS) listing. Qualifications are compliant with AEC-Q100, and a zero-defect methodology is maintained throughout definition, design, evaluation, qualification, and mass production steps.

Table 20. Si88x4x Ordering Guide[1,2,3,4,5,6,7]

Ordering Part Number (OPN)	Automotive OPN	DC-DC Shutdown	Soft Start Control	Frequency Control	External Switch	Forward Digital Channels	Reverse Digital Channels	Package
3.75 kVrms Insulation Rating								
Si88240BC-IS	Si88240BC-AS	Y	N	N	N	4	0	WB SOIC-20
Si88240EC-IS	Si88240EC-AS	Y	N	N	N	4	0	WB SOIC-20
Si88241BC-IS	Si88241BC-AS	Y	N	N	N	3	1	WB SOIC-20
Si88241EC-IS	Si88241EC-AS	Y	N	N	N	3	1	WB SOIC-20
Si88242BC-IS	Si88242BC-AS	Y	N	N	N	2	2	WB SOIC-20
Si88242EC-IS	Si88242EC-AS	Y	N	N	N	2	2	WB SOIC-20
Si88243BC-IS	Si88243BC-AS	Y	N	N	N	1	3	WB SOIC-20
Si88243EC-IS	Si88243EC-AS	Y	N	N	N	1	3	WB SOIC-20
Si88244BC-IS	Si88244BC-AS	Y	N	N	N	0	4	WB SOIC-20
Si88244EC-IS	Si88244EC-AS	Y	N	N	N	0	4	WB SOIC-20
Si88340EC-IS	Si88340EC-AS	Y	Y	Y	N	4	0	WB SOIC-24
Si88341EC-IS	Si88341EC-AS	Y	Y	Y	N	3	1	WB SOIC-24
Si88342EC-IS	Si88342EC-AS	Y	Y	Y	N	2	2	WB SOIC-24
Si88343EC-IS	Si88343EC-AS	Y	Y	Y	N	1	3	WB SOIC-24
Si88344EC-IS	Si88344EC-AS	Y	Y	Y	N	0	4	WB SOIC-24
Si88440EC-IS	Si88440EC-AS	N	N	N	Y	4	0	WB SOIC-20
Si88441EC-IS	Si88441EC-AS	N	N	N	Y	3	1	WB SOIC-20
Si88442EC-IS	Si88442EC-AS	N	N	N	Y	2	2	WB SOIC-20
Si88443EC-IS	Si88443EC-AS	N	N	N	Y	1	3	WB SOIC-20
Si88444EC-IS	Si88444EC-AS	N	N	N	Y	0	4	WB SOIC-20
Si88640EC-IS	Si88640EC-AS	Y	Y	Y	Y	4	0	WB SOIC-24
Si88641EC-IS	Si88641EC-AS	Y	Y	Y	Y	3	1	WB SOIC-24
Si88642EC-IS	Si88642EC-AS	Y	Y	Y	Y	2	2	WB SOIC-24
Si88643EC-IS	Si88643EC-AS	Y	Y	Y	Y	1	3	WB SOIC-24
Si88644EC-IS	Si88644EC-AS	Y	Y	Y	Y	0	4	WB SOIC-24

Table 20. Si88x4x Ordering Guide[1,2,3,4,5,6,7] (Continued)

Ordering Part Number (OPN)	Automotive OPN	DC-DC Shutdown	Soft Start Control	Frequency Control	External Switch	Forward Digital Channels	Reverse Digital Channels	Package
5.0 kVrms Insulation Rating								
Si88240BD-IS	Si88240BD-AS	Y	N	N	N	4	0	WB SOIC-20
Si88240ED-IS	Si88240ED-AS	Y	N	N	N	4	0	WB SOIC-20
Si88241BD-IS	Si88241BD-AS	Y	N	N	N	3	1	WB SOIC-20
Si88241ED-IS	Si88241ED-AS	Y	N	N	N	3	1	WB SOIC-20
Si88242BD-IS	Si88242BD-AS	Y	N	N	N	2	2	WB SOIC-20
Si88242ED-IS	Si88242ED-AS	Y	N	N	N	2	2	WB SOIC-20
Si88243BD-IS	Si88243BD-AS	Y	N	N	N	1	3	WB SOIC-20
Si88243ED-IS	Si88243ED-AS	Y	N	N	N	1	3	WB SOIC-20
Si88244BD-IS	Si88244BD-AS	Y	N	N	N	0	4	WB SOIC-20
Si88244ED-IS	Si88244ED-AS	Y	N	N	N	0	4	WB SOIC-20
Si88340ED-IS	Si88340ED-AS	Y	Y	Y	N	4	0	WB SOIC-24
Si88341ED-IS	Si88341ED-AS	Y	Y	Y	N	3	1	WB SOIC-24
Si88342ED-IS	Si88342ED-AS	Y	Y	Y	N	2	2	WB SOIC-24
Si88343ED-IS	Si88343ED-AS	Y	Y	Y	N	1	3	WB SOIC-24
Si88344ED-IS	Si88344ED-AS	Y	Y	Y	N	0	4	WB SOIC-24
Si88440ED-IS	Si88440ED-AS	N	N	N	Y	4	0	WB SOIC-20
Si88441ED-IS	Si88441ED-AS	N	N	N	Y	3	1	WB SOIC-20
Si88442ED-IS	Si88442ED-AS	N	N	N	Y	2	2	WB SOIC-20
Si88443ED-IS	Si88443ED-AS	N	N	N	Y	1	3	WB SOIC-20
Si88444ED-IS	Si88444ED-AS	N	N	N	Y	0	4	WB SOIC-20
Si88640ED-IS	Si88640ED-AS	Y	Y	Y	Y	4	0	WB SOIC-24
Si88642ED-IS	Si88642ED-AS	Y	Y	Y	Y	2	2	WB SOIC-24
Si88643ED-IS	Si88643ED-AS	Y	Y	Y	Y	1	3	WB SOIC-24
Si88644ED-IS	Si88644ED-AS	Y	Y	Y	Y	0	4	WB SOIC-24

1. All packages are RoHS-compliant with peak solder reflow temperatures of 260 °C according to the JEDEC industry standard classifications.
2. “Si” and “SI” are used interchangeably.
3. An “R” at the end of the part number denotes tape and reel packaging option.
4. AEC-Q100 qualified.
5. All Si88xxxEx product options are default output high on input power loss. All Si88xxxBx product options are default low. See “3. Digital Isolator Device Operation” on page 15 for more details about default output behavior.
6. Automotive-Grade devices (with an "–A" suffix) are identical in construction materials, topside marking, and electrical parameters to their Industrial-Grade (with a "–I" suffix) version counterparts. Automotive-Grade products are produced utilizing full automotive process flows and additional statistical process controls throughout the manufacturing flow. The Automotive-Grade part number is included on shipping labels.
7. In 7. Top Markings , the Manufacturing Code represented by either “RTTTTT” or “TTTTTT” contains as its first character a letter in the range N through Z to indicate Automotive Grade.

9. Revision History

Revision	Date	Description
B	August, 2023	Updated Safety Regulatory Approvals on front page and in tables in "4.1. Safety Certifications and Specifications" on page 30. Reordered sections to conform to Skyworks conventions.
A	July, 2022	Added Agile data sheet revision in footer.
1.06	October, 2020	Corresponding -A OPNs are added for all existing -I OPNs to 8. Ordering Guide. 62368 regulatory information added to Table 7, "Regulatory Information (Pending)," on page 30. Provided additional layout guidelines. Minor edits and text corrections.
1.05	May, 2020	Added Si88642EC-AS to Table 2.2 Ordering Guide for Automotive Grade OPNs.
1.04	May, 2019	Added Si88342EC-AS to Table 2.2 Ordering Guide for Automotive Grade OPNs.
1.03	March, 2019	Corrected Transformer Specification table.
1.02	November, 2018	Updated Transformer Specification table.
1.01	March, 2018	Added Automotive Grade Ordering Guide. Updated Ordering Guide Table 2.1. Updated Transformer Table 3.1. Updated Spec Table 4.2. Added section 5.1 (Calculating total current).
0.6	August, 2015	Reformatted figures. Corrected typos. Added text for clarity.

Copyright © 2023, Skyworks Solutions, Inc. All Rights Reserved.

Information in this document is provided in connection with Skyworks Solutions, Inc. ("Skyworks") products or services. These materials, including the information contained herein, are provided by Skyworks as a service to its customers and may be used for informational purposes only by the customer. Skyworks assumes no responsibility for errors or omissions in these materials or the information contained herein. Skyworks may change its documentation, products, services, specifications or product descriptions at any time, without notice. Skyworks makes no commitment to update the materials or information and shall have no responsibility whatsoever for conflicts, incompatibilities, or other difficulties arising from any future changes.

No license, whether express, implied, by estoppel or otherwise, is granted to any intellectual property rights by this document. Skyworks assumes no liability for any materials, products or information provided hereunder, including the sale, distribution, reproduction or use of Skyworks products, information or materials, except as may be provided in Skyworks' Terms and Conditions of Sale.

THE MATERIALS, PRODUCTS AND INFORMATION ARE PROVIDED "AS IS" WITHOUT WARRANTY OF ANY KIND, WHETHER EXPRESS, IMPLIED, STATUTORY, OR OTHERWISE, INCLUDING FITNESS FOR A PARTICULAR PURPOSE OR USE, MERCHANTABILITY, PERFORMANCE, QUALITY OR NON-INFRINGEMENT OF ANY INTELLECTUAL PROPERTY RIGHT; ALL SUCH WARRANTIES ARE HEREBY EXPRESSLY DISCLAIMED. SKYWORKS DOES NOT WARRANT THE ACCURACY OR COMPLETENESS OF THE INFORMATION, TEXT, GRAPHICS OR OTHER ITEMS CONTAINED WITHIN THESE MATERIALS. SKYWORKS SHALL NOT BE LIABLE FOR ANY DAMAGES, INCLUDING BUT NOT LIMITED TO ANY SPECIAL, INDIRECT, INCIDENTAL, STATUTORY, OR CONSEQUENTIAL DAMAGES, INCLUDING WITHOUT LIMITATION, LOST REVENUES OR LOST PROFITS THAT MAY RESULT FROM THE USE OF THE MATERIALS OR INFORMATION, WHETHER OR NOT THE RECIPIENT OF MATERIALS HAS BEEN ADVISED OF THE POSSIBILITY OF SUCH DAMAGE.

Skyworks products are not intended for use in medical, lifesaving or life-sustaining applications, or other equipment in which the failure of the Skyworks products could lead to personal injury, death, physical or environmental damage. Skyworks customers using or selling Skyworks products for use in such applications do so at their own risk and agree to fully indemnify Skyworks for any damages resulting from such improper use or sale.

Customers are responsible for their products and applications using Skyworks products, which may deviate from published specifications as a result of design defects, errors, or operation of products outside of published parameters or design specifications. Customers should include design and operating safeguards to minimize these and other risks. Skyworks assumes no liability for applications assistance, customer product design, or damage to any equipment resulting from the use of Skyworks products outside of Skyworks' published specifications or parameters.

Skyworks, the Skyworks symbol, Sky5®, SkyOne®, SkyBlue™, Skyworks Green™, ClockBuilder®, DSPLL®, ISOmodem®, ProSLIC®, SiPHY®, and RFeIC® are trademarks or registered trademarks of Skyworks Solutions, Inc. or its subsidiaries in the United States and other countries. Third-party brands and names are for identification purposes only and are the property of their respective owners. Additional information, including relevant terms and conditions, posted at www.skyworksinc.com, are incorporated by reference.