DATA SHEET

SKY13416-485LF: 0.1 to 6.0 GHz SP6T Antenna Switch

Applications

- Any 2G/3G/4G antenna diversity or LTE (TDD/FDD) transmit/receive system for which GSM transmit is not required

Features

- Broadband frequency range: 0.1 to 6.0 GHz
- Low insertion loss: 0.6 dB typical @ 5.0 GHz
- High isolation: >26 dB @ 2.7 GHz
- Integrated logic
- Small QFN (14-pin, 2.0 x 2.0 mm) package (MSL1, 260 °C per JEDEC J-STD-020)

Skyworks Green™ products are compliant with all applicable legislation and are halogen-free. For additional information, refer to *Skyworks Definition of Green™*, document number SQ04-0074.

Description

The SKY13416-485LF is a single pole, six-throw (SP6T) antenna switch. The high-linearity performance and low insertion loss achieved by the SKY13416-485LF make it an ideal choice for main/diversity switching commonly used in LTE-based handsets, data cards, and tablets that use antenna diversity solutions.

The SKY13416-485LF is part of a scalable family of products that covers SP4T through SP8T switches that allow up to eight bands of WCDMA/LTE:

- SKY13414-485LF SP4T Antenna Switch (Data Sheet #201689)
- SKY13415-485LF SP5T Antenna Switch (Data Sheet #201704)
- SKY13416-485LF SP6T Antenna Switch (this Data Sheet)
- SKY13417-485LF SP7T Antenna Switch (Data Sheet #201661)
- SKY13418-485LF SP8T Antenna Switch (Data Sheet #201712)

The symmetric port designs provide flexibility in signal routing for both receive diversity and higher power TD-SCDMA/TDD-LTE, WCDMA/FDD, and LTE transmit/receive applications.

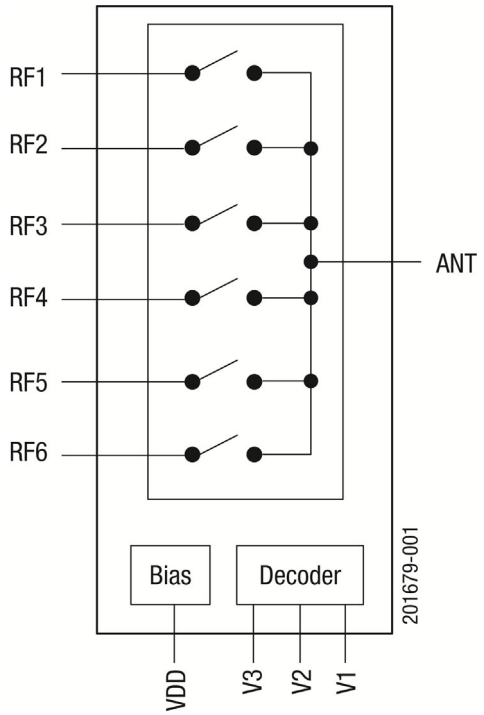

Figure 1. SKY13416-485LF Block Diagram

Switching is controlled by three CMOS/TTL-compatible control voltage inputs (V1, V2, and V3). Depending on the logic voltage level applied to the control pins, the ANT pin is connected to one of six switched RF outputs (RF1 to RF6) using a low insertion loss path, while the paths between the ANT pin and the other RF pins are in a high isolation state. No external blocking capacitors are required on the RF paths unless VDC is externally applied.

The SKY13416-485LF is manufactured in a compact, 14-pin 2.0 x 2.0 mm, Quad Flat No-Lead (QFN) package.

A functional block diagram is shown in Figure 1. The pin configuration and package are shown in Figure 2. Signal pin assignments and functional pin descriptions are provided in Table 1.

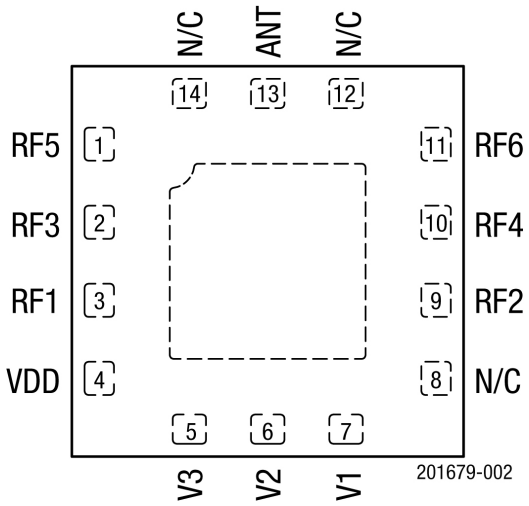

Figure 2. SKY13416-485LF Pinout (Top View)

Table 1. SKY13416-485LF Signal Descriptions[1]

Pin	Name	Description	Pin	Name	Description
1	RF5	RF I/O path 5	8	N/C	Not connected
2	RF3	RF I/O path 3	9	RF2	RF I/O path 2
3	RF1	RF I/O path 1	10	RF4	RF I/O path 4
4	VDD	DC power supply	11	RF6	RF I/O path 6
5	V3	DC control voltage 3	12	N/C	Not connected
6	V2	DC control voltage 2	13	ANT	Antenna port
7	V1	DC control voltage 1	14	N/C	Not connected

[1] Bottom ground paddles must be connected to ground.

Functional Description

The SKY13416-485LF includes an internal negative voltage generator and decoder that eliminate the need for external DC blocking capacitors on the RF ports. No external components are required for proper operation. DC decoupling capacitors may be added on the VDD and control lines if necessary.

Switching is controlled by three control voltage inputs, V1, V2, and V3. Depending on the logic voltage level applied to the control pins, the antenna pin is connected to one of six switched RF outputs.

A seventh state enables RF3 and RF5 at the same time. The output power measured at RF3 and RF5 in this state is 3 dB less than the typical insertion loss.

Shutdown mode is enabled by connecting all three control pins (V1, V2, and V3) to logic high. This mode reduces the overall current consumption of the device to 5 μA typical.

Electrical and Mechanical Specifications

The absolute maximum ratings of the SKY13416-485LF are provided in Table 2. Electrical specifications are provided in Table 3.

The state of the SKY13416-485LF is determined by the logic shown in Table 4.

The isolation matrix shown in Table 5 provides the port-to-port and antenna-to-port isolation for all available RF states at four different frequencies: 1.0 GHz, 2.0 GHz, 2.7 GHz, and 3.8 GHz Table 6 shows the Insertion Loss (IL) and Return Loss (RL).

Table 2. SKY13416-485LF Absolute Maximum Ratings[1]

Parameter	Symbol	Minimum	Maximum	Units
Supply voltage	V_{DD}	2.5	5.0	V
Control voltage (V1, V2, and V3)	V_{CTL}	-0.5	+3.0	V
RF input power (RF1 to RF6):	P_{IN}			
0.1 to 2.7 GHz			+37.5	dBm
3.4 to 5.0 GHz			+36.5	dBm
Operating temperature	T_{OP}	-40	+85	°C
Storage temperature	T_{STG}	-55	+150	°C
Electrostatic discharge:	ESD			
Human Body Model (HBM), Class 1B			500	V

1 Exposure to maximum rating conditions for extended periods may reduce device reliability. There is no damage to device with only one parameter set at the limit and all other parameters set at or below their nominal value. Exceeding any of the limits listed here may result in permanent damage to the device.

***ESD HANDLING**: Although this device is designed to be as robust as possible, electrostatic discharge (ESD) can damage this device. This device must be protected at all times from ESD when handling or transporting. Static charges may easily produce potentials of several kilovolts on the human body or equipment, which can discharge without detection. Industry-standard ESD handling precautions should be used at all times.*

Table 3. SKY13416-485LF General Electrical Specifications[1]
(V_{DD} = 2.6 V, V1 = V2 = V3 = 0/1.8 V, P_{IN} = 0 dBm, T_{OP} = +25 °C, Characteristic Impedance [Z_0] = 50 Ω, Unless Otherwise Noted)

Parameter	Symbol	Test Condition (Note 2)	Min	Typ	Max	Units
DC Specifications						
Supply voltage	V_{DD}		2.5	3.0	4.8	V
Supply current	I_{DD}			40	50	µA
Control voltage: High Low	 V_{CTL_H} V_{CTL_L}		 1.35	 1.80	 2.70 0.4	 V V
Control current	I_{CTL}	V_{CTL} = 1.8 V		0.5	1.0	µA
Shutdown mode supply current	I_{OFF}	V1/2/3 = 1.8 V, V_{DD} = 3 V		5	10	µA
Turn-on switching time	t_{ON}	50% of final control voltage to 90% of final RF power, switching between RF1/2/3/4/5/6		1.75	2.20	µs
RF Specifications						
Insertion loss (ANT pin to RF1/2/3/4/5/6 pins)	IL	0.1 to 1.0 GHz 1.0 to 2.0 GHz 2.0 to 2.7 GHz 3.4 to 3.8 GHz		0.40 0.45 0.50 0.5	0.50 0.55 0.60 0.95	dB dB dB dB
Insertion loss (ANT-RF1/2/3/4)	IL	3.8 to 6.0 GHz		0.6	1.4	dB
Insertion loss (ANT-RF5/6)	IL	3.8 to 6.0 GHz		0.9	2.2	dB
Isolation (ANT pin to RF1/2/3/4/5/6 pins)	Iso	0.1 to 1.0 GHz 1.0 to 2.0 GHz 2.0 to 2.7 GHz 3.4 to 3.8 GHz 3.8 to 6.0 GHz	36 28 25 17 15	39 29 27 20 18		dB dB dB dB dB
Input return loss (ANT pin to RF1/2/3/4/5/6 pins)	RL	0.1 to 1.0 GHz 1.0 to 2.0 GHz 2.0 to 2.7 GHz 3.4 to 3.8 GHz 3.8 to 6.0 GHz	24 23 15 8.5 6.0	27 25 18 10 12		dB dB dB dB dB
2ND harmonics: ANT pin to RF1/2/3/4/5/6 pins ANT pin to RF2/3/4/5/6 pins	2fo	P_{IN} = +26 dBm: 0.1 to 2.7 GHz 3.4 to 3.8 GHz		 +96 +92		 dBc dBc
3RD harmonics: ANT pin to RF1/2/3/4/5/6 pins ANT pin to RF2/3/4/5/6 pins	3fo	P_{IN} = +26 dBm: 0.1 to 2.7 GHz 3.4 to 3.8 GHz		 +99 +94		 dBc dBc
Harmonics (ANT-RF3,4,5,6) +26 dBm input power	2fo 3fo 2fo 3fo	3.8 to 5 GHz 3.8 to 5 GHz 3.8 to 5 GHz, VSWR 5:1 3.8 to 5 GHz, VSWR 5:1		-78 -79 -70 -75	-55 -53 -40 -42	dBm dBm dBm dBm
0.1 dB compression point (ANT pin to RF1/2/3/4/5/6 pins)	P0.1dB	0.1 GHz to 2.7 GHz 3.4 GHz to 5.0 GHz	 +36.5	+37.5 +37.1		dBm dBm
Third order input intercept point	IIP3	@ 2.0 GHz, P_{IN} = +26 dBm, Δf = 1 MHz		 +70		 dBm

[1] Performance is guaranteed only under the conditions listed in this table.

Table 4. SKY13416-485LF Control Logic[1]

Control Pins			Switched RF Outputs					
V1 (Pin 7)	V2 (Pin 6)	V3 (Pin 5)	RF1 (Pin 3)	RF2 (Pin 9)	RF3 (Pin 2)	RF4 (Pin 10)	RF5 (Pin 1)	RF6 (Pin 11)
0	0	0	**Insertion Loss**	Isolation	Isolation	Isolation	Isolation	Isolation
0	0	1	Isolation	**Insertion Loss**	Isolation	Isolation	Isolation	Isolation
0	1	0	Isolation	Isolation	**Insertion Loss**	Isolation	Isolation	Isolation
0	1	1	Isolation	Isolation	Isolation	**Insertion Loss**	Isolation	Isolation
1	0	0	Isolation	Isolation	Isolation	Isolation	**Insertion Loss**	Isolation
1	0	1	Isolation	Isolation	Isolation	Isolation	Isolation	**Insertion Loss**
1	1	0	Isolation	Isolation	**Insertion Loss**	Isolation	**Insertion Loss**	Isolation
1	1	1	Shutdown Mode					

1 "High" = 1.8 V; "Low" = 0 V. Any state other than that described in this table places the switch into an undefined state. An undefined state will not damage the device. Insertion loss in V1/V2/V3 = 110b state is 3 dB lower than typical insertion loss.

Table 5. Isolation Matrix (1 of 2)

"On" Port	Frequency (GHz)	Isolation (dB)					
		RF1	RF2	RF3	RF4	RF5	RF6
Antenna-to-Port							
RF1	1.0		-48	-41	-42	-39	-38
RF1	2.0		-40	-32	-36	-30	-31
RF1	2.7		-37	-28	-33	-26	-28
RF1	3.8		-32	-18	-34	-25	-31
RF2	1.0	-45		-40	-40	-36	-39
RF2	2.0	-38		-34	-33	-30	-31
RF2	2.7	-35		-31	-29	-27	-27
RF2	3.8	-32		-33	-18	-29	-25
RF3	1.0	-38	-47		-43	-42	-38
RF3	2.0	-31	-40		-36	-31	-31
RF3	2.7	-28	-36		-33	-26	-28
RF3	3.8	-18	-34		-34	-18	-31
RF4	1.0	-44	-38	-40		-37	-43
RF4	2.0	-37	-32	-34		-30	-31
RF4	2.7	-34	-29	-31		-27	-27
RF4	3.8	-33	-18	-33		-29	-19
RF5	1.0	-47	-47	-38	-44		-39
RF5	2.0	-36	-40	-30	-36		-32
RF5	2.7	-31	-36	-27	-33		-29
RF5	3.8	-22	-33	-17	-33		-30
RF6	1.0	-45	-49	-41	-39	-38	
RF6	2.0	-38	-37	-35	-31	-31	
RF6	2.7	-35	-32	-31	-28	-28	
RF6	3.8	-33	-23	-32	-17	-29	

Table 5. Isolation Matrix (2 of 2)

"On" Port	Frequency (GHz)	Isolation (dB)					
		RF1	RF2	RF3	RF4	RF5	RF6
Port-to-Port							
RF1	1.0		-52	-31	-52	-44	-43
RF1	2.0		-43	-25	-44	-35	-37
RF1	2.7		-38	-22	-39	-30	-33
RF1	3.8		-32	-23	-29	-21	-24
RF2	1.0	-53		-47	-31	-40	-44
RF2	2.0	-42		-40	-25	-34	-35
RF2	2.7	-38		-37	-22	-31	-30
RF2	3.8	-31		-27	-25	-23	-22
RF3	1.0	-31	-54		-53	-33	-44
RF3	2.0	-24	-44		-44	-26	-37
RF3	2.7	-21	-39		-39	-23	-34
RF3	3.8	-24	-32		-29	-21	-24
RF4	1.0	-54	-31	-48		-41	-33
RF4	2.0	-43	-24	-41		-35	-26
RF4	2.7	-39	-22	-37		-32	-23
RF4	3.8	-30	-25	-27		-23	-22
RF5	1.0	-36	-54	-30	-54		-46
RF5	2.0	-30	-44	-24	-44		-38
RF5	2.7	-27	-39	-21	-39		-34
RF5	3.8	-26	-32	-22	-29		-24
RF6	1.0	-54	-37	-50	-31	-43	
RF6	2.0	-43	-30	-41	-24	-36	
RF6	2.7	-39	-27	-37	-21	-33	
RF6	3.8	-30	-27	-27	-24	-23	

Table 6. Insertion Loss (IL) and Return Loss (RL) Matrix

"On" Throw	Frequency (GHz)	IL (dB)	RL_Pole (dB)	RL_Throw (dB)
RF1	1.0	-0.38	-20	-21
RF1	2.0	-0.47	-18	-19
RF1	2.7	-0.47	-18	-19
RF1	3.8	-0.66	-13	-14
RF2	1.0	-0.36	-20	-21
RF2	2.0	-0.44	-19	-18
RF2	2.7	-0.45	-18	-20
RF2	3.8	-0.63	-13	-14
RF3	1.0	-0.38	-20	-20
RF3	2.0	-0.47	-17	-17
RF3	2.7	-0.49	-16	-18
RF3	3.8	-0.71	-12	-13
RF4	1.0	-0.38	-20	-20
RF4	2.0	-0.47	-17	-17
RF4	2.7	-0.48	-17	-18
RF4	3.8	-0.72	-12	-12
RF5	1.0	-0.40	-19	-20
RF5	2.0	-0.50	-17	-17
RF5	2.7	-0.53	-15	-18
RF5	3.8	-0.80	-11	-12
RF6	1.0	-0.36	-19	-20
RF6	2.0	-0.47	-16	-16
RF6	2.7	-0.49	-16	-17
RF6	3.8	-0.76	-11	-12

Evaluation Board Description

The SKY13416-485LF Evaluation Board is used to test the performance of the SKY13416-485LF SP6T Switch. An Evaluation Board schematic diagram is provided in Figure 3. An assembly drawing for the Evaluation Board is shown in Figure 4.

Package Dimensions

The PCB layout footprint for the SKY13416-485LF is provided in Figure 5. Typical part markings are shown in Figure 6. Package dimensions are shown in Figure 7, and tape and reel dimensions are provided in Figure 8.

Package and Handling Information

Instructions on the shipping container label regarding exposure to moisture after the container seal is broken must be followed. Otherwise, problems related to moisture absorption may occur when the part is subjected to high temperature during solder assembly.

The SKY13416-485LF is rated to Moisture Sensitivity Level 1 (MSL1) at 260 °C. It can be used for lead or lead-free soldering. For additional information, refer to the Skyworks Application Note, *PCB Design & SMT Assembly/Rework Guidelines for MCM-L Packages*, document number 101752.

Care must be taken when attaching this product, whether it is done manually or in a production solder reflow environment. Production quantities of this product are shipped in a standard tape and reel format.

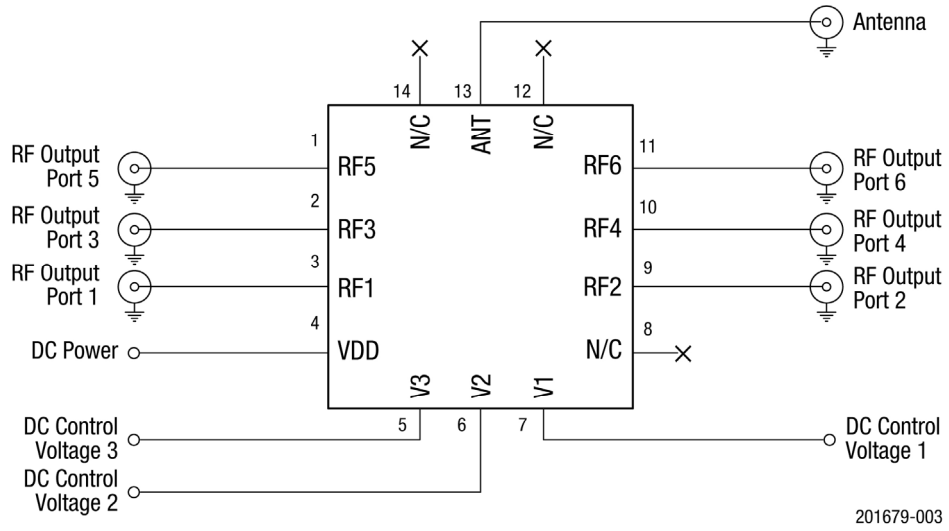

Figure 3. SKY13416-485LF Evaluation Board Schematic

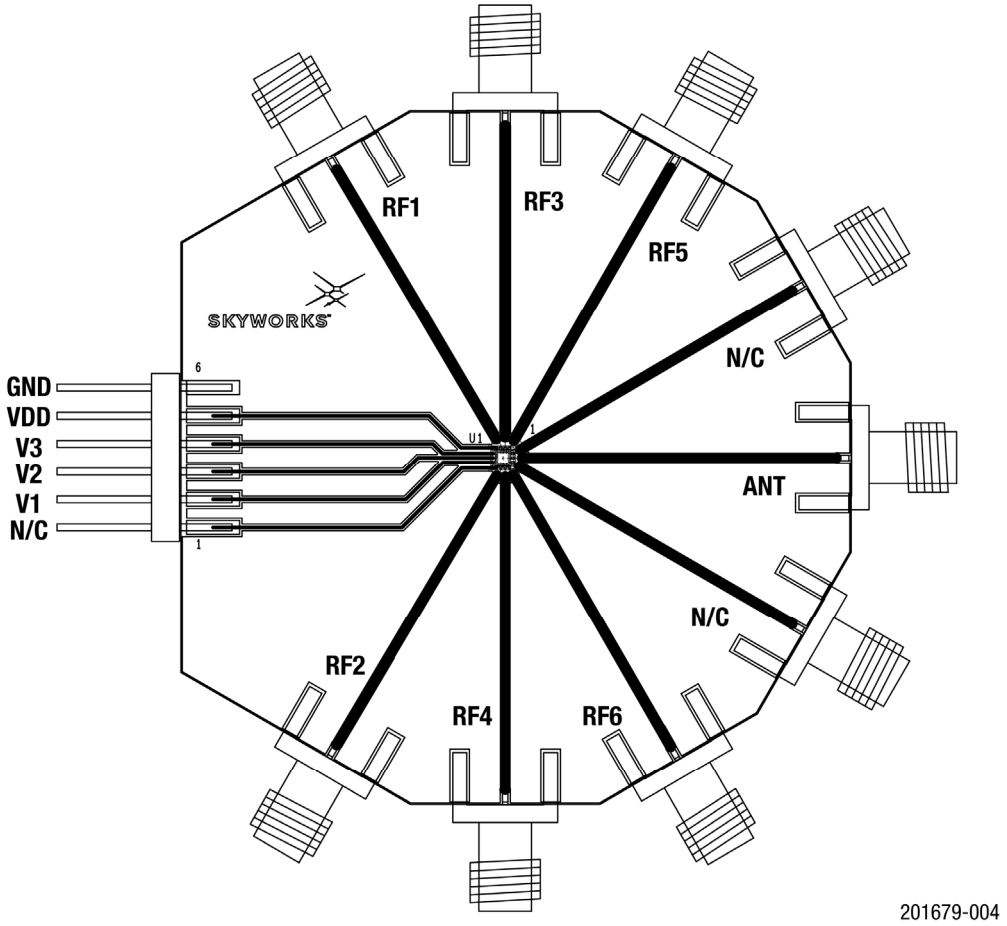

Figure 4. SKY13416-485LF Evaluation Board Assembly Diagram

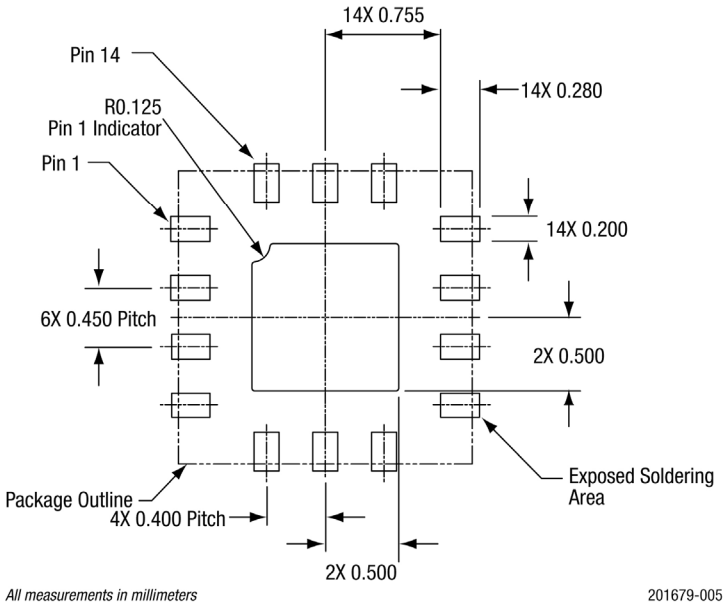

Figure 5. SKY13416-485LF PCB Layout Footprint (Top View)

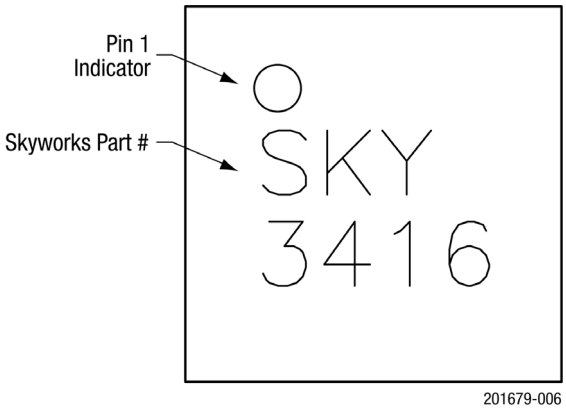

Figure 6. Typical Part Markings (Top View)

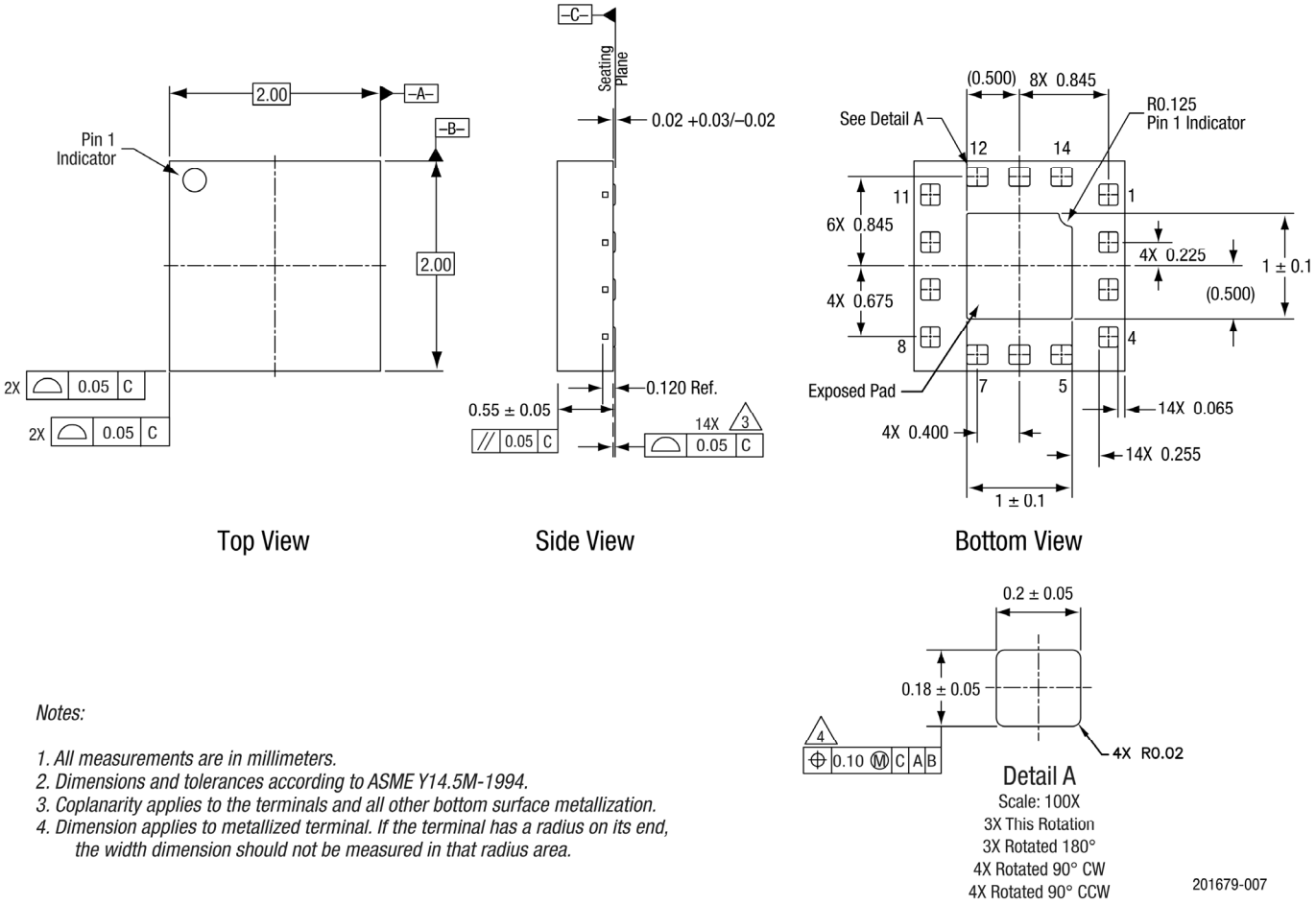

Notes:

1. All measurements are in millimeters.
2. Dimensions and tolerances according to ASME Y14.5M-1994.
3. Coplanarity applies to the terminals and all other bottom surface metallization.
4. Dimension applies to metallized terminal. If the terminal has a radius on its end, the width dimension should not be measured in that radius area.

Figure 7. SKY13416-485LF Package Dimensions

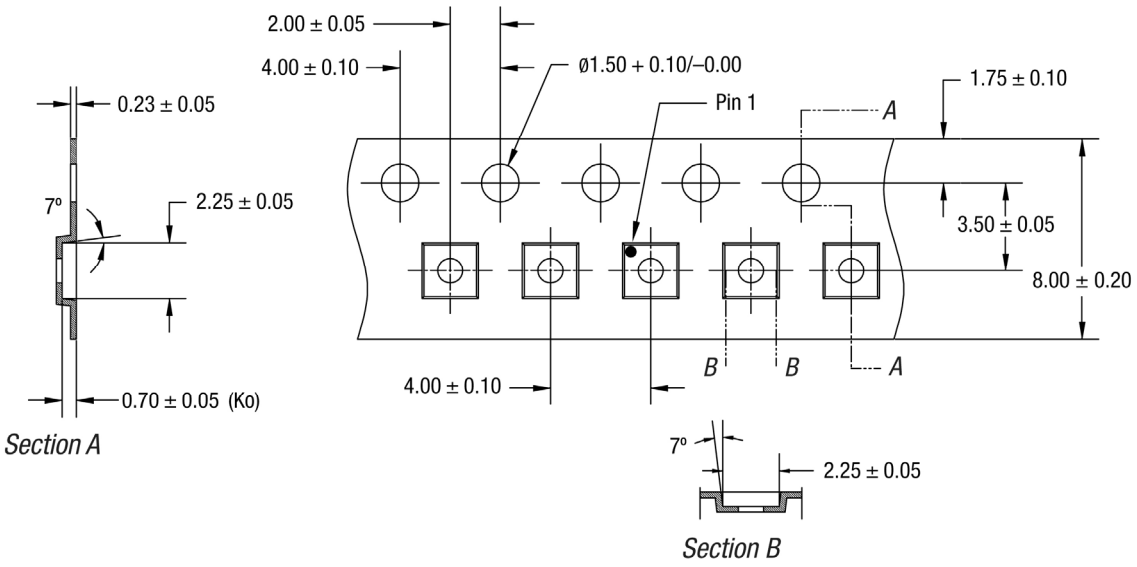

Notes:

1. *Carrier tape must meet all requirements of Skyworks GP01-D232 procurement spec for tape and reel shipping.*
2. *Carrier tape shall be black conductive polycarbonate bakeable material at 125 °C temperature.*
3. *Cover tape shall be transparent conductive with 5.40 mm width.*
4. *ESD-surface resistivity must meet all ESD requirements of Skyworks specified on GP01-D232.*
5. *All measurements are in millimeters.*

201679-008

Figure 8. SKY13416-485LF Tape and Reel Dimensions

Ordering Information

Part Number	Product Description	Evaluation Board Part Number
SKY13416-485LF	0.1 to 6.0 GHz SP6T Antenna Switch	SKY13416-485LF-EVB

Copyright © 2011-2016, 2018-2019 Skyworks Solutions, Inc. All Rights Reserved.

Information in this document is provided in connection with Skyworks Solutions, Inc. (“Skyworks”) products or services. These materials, including the information contained herein, are provided by Skyworks as a service to its customers and may be used for informational purposes only by the customer. Skyworks assumes no responsibility for errors or omissions in these materials or the information contained herein. Skyworks may change its documentation, products, services, specifications or product descriptions at any time, without notice. Skyworks makes no commitment to update the materials or information and shall have no responsibility whatsoever for conflicts, incompatibilities, or other difficulties arising from any future changes.

No license, whether express, implied, by estoppel or otherwise, is granted to any intellectual property rights by this document. Skyworks assumes no liability for any materials, products or information provided hereunder, including the sale, distribution, reproduction or use of Skyworks products, information or materials, except as may be provided in Skyworks Terms and Conditions of Sale.

THE MATERIALS, PRODUCTS AND INFORMATION ARE PROVIDED “AS IS” WITHOUT WARRANTY OF ANY KIND, WHETHER EXPRESS, IMPLIED, STATUTORY, OR OTHERWISE, INCLUDING FITNESS FOR A PARTICULAR PURPOSE OR USE, MERCHANTABILITY, PERFORMANCE, QUALITY OR NON-INFRINGEMENT OF ANY INTELLECTUAL PROPERTY RIGHT; ALL SUCH WARRANTIES ARE HEREBY EXPRESSLY DISCLAIMED. SKYWORKS DOES NOT WARRANT THE ACCURACY OR COMPLETENESS OF THE INFORMATION, TEXT, GRAPHICS OR OTHER ITEMS CONTAINED WITHIN THESE MATERIALS. SKYWORKS SHALL NOT BE LIABLE FOR ANY DAMAGES, INCLUDING BUT NOT LIMITED TO ANY SPECIAL, INDIRECT, INCIDENTAL, STATUTORY, OR CONSEQUENTIAL DAMAGES, INCLUDING WITHOUT LIMITATION, LOST REVENUES OR LOST PROFITS THAT MAY RESULT FROM THE USE OF THE MATERIALS OR INFORMATION, WHETHER OR NOT THE RECIPIENT OF MATERIALS HAS BEEN ADVISED OF THE POSSIBILITY OF SUCH DAMAGE.

Skyworks products are not intended for use in medical, lifesaving or life-sustaining applications, or other equipment in which the failure of the Skyworks products could lead to personal injury, death, physical or environmental damage. Skyworks customers using or selling Skyworks products for use in such applications do so at their own risk and agree to fully indemnify Skyworks for any damages resulting from such improper use or sale.

Customers are responsible for their products and applications using Skyworks products, which may deviate from published specifications as a result of design defects, errors, or operation of products outside of published parameters or design specifications. Customers should include design and operating safeguards to minimize these and other risks. Skyworks assumes no liability for applications assistance, customer product design, or damage to any equipment resulting from the use of Skyworks products outside of stated published specifications or parameters.

Skyworks and the Skyworks symbol are trademarks or registered trademarks of Skyworks Solutions, Inc. or its subsidiaries in the United States and other countries. Third-party brands and names are for identification purposes only, and are the property of their respective owners. Additional information, including relevant terms and conditions, posted at www.skyworksinc.com, are incorporated by reference.