Automation Transformers - Non-Ventilated 50 VA to 45 kVA

SolaHD encapsulated transformers are rated for hazardous locations as well as harsh industrial environments. Encapsulation and rugged UL Listed/NEMA Type 3R enclosures protect the transformer from dust, moisture, and provides extra shock and vibration resistance. SolaHD transformers fully comply with the latest edition of the National Electrical Code for Class I, Division 2, Group A, B, C and D locations when installed in compliance with NEC 501.100 (B).



c UL us
E25872
E77014

Features

Single Phase: .05 – .250 kVA

- UL Listed/NEMA Type 3R non encapsulated enclosure for indoor and outdoor service
- Low temperature rise, UL Class I30 ˚C insulation system, 80 ˚C temperature rise under full load
- Conduit knockouts for side entry into wiring compartment
- Copper lead wire terminations

Single Phase: 0.500 – 25 kVA
Three Phase: 3 – 45 kVA

- Available as standard in Cold Rolled Steel or Painted Stainless Steel
- UL Listed/NEMA Type 3R encapsulated enclosure for indoor and outdoor service
- Electrostatically shielded for quality power on sizes 1 kVA and larger
- UL Class 200˚C insulation system, 115˚C temperature rise under full load
- Conduit knockouts for side entry into wiring compartment (Type 3R versions only)
- Copper lead wire terminations
- .500 - 45 kVA units are encapsulated with electrical grade silica and epoxy for industrial applications

Related Products

- Some SolaHD DC power supplies are available with Class I, Division 2 ratings or encapsulation.
- Surge Protective Devices

Certifications and Compliances

All Models

- c UL us Listed: E25872, E77014
  - UL 1561 or UL 5085-1, UL 5085-2
  - CSA C22.2 No. 47 or No. 66
  - RoHS Compliant

Group 5, Export Models

- CE Low Voltage Directive
  - IEC 61558-1, IEC 61558-2-4

Accessories and Optional Design Styles

- Other enclosure styles available (contact Technical Support for details):
  - 316 Stainless Steel
- Copper Wound designs
- UL Listed/NEMA Type 4/12 or 4X Encapsulated Enclosures
- Low temperature designs available
- cULus Listed E361435 transformers for Class I, Division 2/Zone 2 hazardous locations are available as custom designs.

Note: Weights and dimensions may change and should not be used for construction purposes.

© July 2020

Selection Table: Single Phase

Group 1: 240 x 480 Primary, 120/240 Secondary, 60 Hz

kVA	Catalog Number Group I Rolled Steel	Catalog Number Group II Stainless Steel [2]	Height in (mm)	Width in (mm)	Depth in (mm)	Approx. Ship Weight lbs (kg)	Design Style [1]	Elec Conn [1]	Primary Amps	Secondary Amps
Non–Encapsulated										
.050	**HS1B50**	**N/A**	6.00 (152.4)	4.00 (101.6)	3.00 (76.2)	3.00 (1.36)	2	15	.208/.104	0.416/0.208
.075	**HS1B75**		6.00 (152.4)	4.00 (101.6)	3.00 (76.2)	3.00 (1.36)	2	15	.312/.156	0.625/0.312
.100	**HS1B100**		6.00 (152.4)	4.00 (101.6)	3.00 (76.2)	4.00 (1.81)	2	15	.417/.208	0.833/0.417
.150	**HS1B150**		8.00 (203.2)	4.00 (101.6)	4.00 (101.6)	5.00 (2.27)	2	15	.625/.313	1.25/.625
.250	**HS1B250**		8.00 (203.2)	4.00 (101.6)	4.00 (101.6)	8.00 (3.63)	2	15	1.04/.512	2.08/1.04
Encapsulated										
0.5	**HS1F500B**	**HSP1F500B**	10.00 (254.0)	6.00 (152.4)	5.00 (127.0)	22.0 (9.98)	3	15	2.08/1.04	4.16/2.08
0.75	**HS1F750B**	**HSP1F750B**	10.00 (254.0)	6.00 (152.4)	5.00 (127.0)	27.0 (12.25)	3	15	3.13/1.56	6.25/3.13
1	**HS1F1BS**	**HSP1F1BS**	10.00 (254.0)	6.00 (152.4)	5.00 (127.0)	28.0 (12.70)	3	16	4.17/2.08	8.33/4.17
1.5	**HS1F1.5AS**	**HSP1F1.5AS**	12.00 (304.8)	10.00 (254.0)	7.00 (177.8)	38.0 (17.24)	4	16	6.25/3.13	12.5/6.25
2	**HS1F2AS**	**HSP1F2AS**	12.00 (304.8)	10.00 (254.0)	7.00 (177.8)	45.0 (20.42)	4	16	8.33/4.17	16.7/8.33
3	**HS5F3AS**	**HSP5F3AS**	12.00 (304.8)	10.00 (254.0)	7.00 (177.8)	55.0 (24.95)	4	17	12.5/6.25	25.0/12.5
5	**HS5F5AS**	**HSP5F5AS**	17.00 (431.8)	14.00 (355.6)	9.00 (228.6)	131.0 (59.42)	4	17	20.8/10.4	41.6/20.8
7.5	**HS5F7.5AS**	**HSP5F7.5AS**	17.00 (431.8)	14.00 (355.6)	9.00 (228.6)	155.0 (70.31)	4	18	31.3/15.6	62.5/31.3
10	**HS5F10AS**	**HSP5F10AS**	17.00 (431.8)	14.00 (355.6)	9.00 (228.6)	166.0 (75.30)	4	18	41.7/20.8	83.3./41.7
15	**HS5F15BS [3]**	**HSP5F15BS**	24.00 (610.0)	17.00 (432.0)	12.50 (318.0)	375.0 (170.00)	4	18	62.5/31.2	125.0/62.5
25	**HS5F25BS [3]**	**HSP5F25BS**	24.00 (610.0)	17.00 (432.0)	12.50 (318.0)	400.0 (181.00)	4	18	104.0/52.0	208.0/104.0

Group 2: 600 Volt Primary, 120/240 Secondary, 60 Hz

kVA	Catalog Number Group 1 Rolled Steel	Catalog Number Group II Stainless Steel [2]	Height in (mm)	Width in (mm)	Depth in (mm)	Approx. Ship Weight lbs (kg)	Design Style [1]	Elec Conn [1]	Primary Amps	Secondary Amps
Non–Encapsulated										
.100	**HS10B100**	**N/A**	6.00 (152.4)	4.00 (101.6)	3.00 (76.2)	4.00 (1.81)	2	21	0.167	.833/.417
.150	**HS10B150**		8.00 (203.2)	4.00 (101.6)	4.00 (101.6)	5.00 (2.27)	2	21	0.25	1.25/.625
.250	**HS10B250**		8.00 (203.2)	4.00 (101.6)	4.00 (101.6)	8.00 (3.63)	2	21	0.417	2.08/1.04
Encapsulated										
.500	**HS10F500B**	**HSP10F500B**	10.00 (254.0)	6.00 (152.4)	5.00 (127.0)	22.0 (9.98)	3	21	0.833	4.16/2.08
.750	**HS10F750B**	**HSP10F750B**	10.00 (254.0)	6.00 (152.4)	5.00 (127.0)	23.0 (10.43)	3	21	1.25	6.25/3.13
1	**HS10F1BS**	**HSP10F1BS**	10.00 (254.0)	6.00 (152.4)	5.00 (127.0)	28.0 (12.70)	3	21	1.67	8.33/4.17
1.5	**HS10F1.5AS**	**HSP10F1.5AS**	12.00 (304.8)	10.00 (254.0)	7.00 (177.8)	38.0 (17.24)	4	21	2.5	12.5/6.25
2	**HS10F2AS**	**HSP10F2AS**	12.00 (304.8)	10.00 (254.0)	7.00 (177.8)	60.0 (27.22)	4	21	3.33	16.7/8.33
3	**HS10F3AS**	**HSP10F3AS**	12.00 (304.8)	10.00 (254.0)	7.00 (177.8)	66.0 (29.94)	4	22	5.0	25.0/12.5
5	**HS10F5AS**	**HSP10F5AS**	17.00 (431.8)	14.00 (355.6)	9.00 (228.6)	100.0 (45.36)	4	22	8.3	41.6/20.8
7.5	**HS10F7.5AS**	**HSP10F7.5AS**	17.00 (431.8)	14.00 (355.6)	9.00 (228.6)	135.0 (61.23)	4	22	12.5	62.5/31.3
10	**HS10F10AS**	**HSP10F10AS**	17.00 (431.8)	14.00 (355.6)	9.00 (228.6)	150.0 (68.04)	4	22	16.7	83.3/41.7

Notes:

1. Design Styles and Electrical Connections can be found at the end of the Non-Ventilated Distribution Transformers section.
2. Contact Technical Services for other enclosure types.
3. Supersedes Previous Designs, Please Contact Technical Services Regarding HS5F15AS or HSF25AS Enclosure Options.

© July 2020

Selection Table: Single Phase

Group 3: 120/208/240/277 Volt Primary, 120/240 Secondary, 60 Hz

kVA	Catalog Number Group 1 Rolled Steel	Catalog Number Group 2 Stainless Steel [3]	Height in (mm)	Width in (mm)	Depth in (mm)	Approx. Ship Weight lbs (kg)	Design Style [1]	Elec Conn [1]	Primary Amps @ 277 V	Secondary Amps
Encapsulated										
1	**HS12F1BS**	**HSP12F1BS**	10.00 (254.0)	6.00 (152.4)	5.00 (127.0)	29.0 (13.15)	3	19	3.6	8.33/4.17
1.5	**HS12F1.5AS**	**HSP12F1.5AS**	12.00 (304.8)	10.00 (254.0)	7.00 (177.8)	40.0 (18.14)	4	20	5.4	12.5/6.25
2	**HS12F2AS**	**HSP12F2AS**	12.00 (304.8)	10.00 (254.0)	7.00 (177.8)	60.0 (27.22)	4	20	7.2	16.7/8.33
3	**HS12F3AS**	**HSP12F3AS**	12.00 (304.8)	10.00 (254.0)	7.00 (177.8)	66.0 (29.94)	4	20	10.8	25.0/12.5
5	**HS12F5AS**	**HSP12F5AS**	17.00 (431.8)	14.00 (355.6)	9.00 (228.6)	104.0 (47.17)	4	20	18.0	41.6/20.8
7.5	**HS12F7.5AS**	**HSP12F7.5AS**	17.00 (431.8)	14.00 (355.6)	9.00 (228.6)	135.0 (61.23)	4	20	27.1	62.5/31.3
10	**HS12F10AS**	**HSP12F10AS**	17.00 (431.8)	14.00 (355.6)	9.00 (228.6)	156.0 (70.76)	4	20	36.1	83.3/41.7

Group 4: 190/200/208/220/380/400/415/440 Volt Primary, 110/220 Secondary, 50/60 Hz Copper wound
200/208/230/400/415/460 Volt Primary, 115/230 Secondary, 50/60 Hz Copper wound
208/240/415/480 Volt Primary, 120/240 Secondary, 60 Hz only Copper wound

kVA	Catalog Number Group 1 Rolled Steel	Catalog Number Group 2 Stainless Steel [3]	Height in (mm)	Width in (mm)	Depth in (mm)	Approx. Ship Weight lbs (kg)	Design Style [1]	Elec Conn [1]	Primary Amps [2]	Secondary Amps
Encapsulated, Copper Wound										
1	**HS14F1BS**	**HSP14F1BS**	10.00 (254.0)	6.00 (152.4)	5.00 (127.0)	34.0 (15.42)	3	23	4.5/2.3	9.1/4.5
1.5	**HS14F1.5BS**	**HSP14F1.5BS**	12.00 (304.8)	10.00 (254.0)	7.00 (177.8)	40.0 (18.13)	4	24	6.8/3.4	13.6/6.8
2	**HS14F2BS**	**HSP14F2BS**	12.00 (304.8)	10.00 (254.0)	7.00 (177.8)	60.0 (27.21)	4	24	9.1/4.5	18.2/9.1
3	**HS14F3BS**	**HSP14F3BS**	12.00 (304.8)	10.00 (254.0)	7.00 (177.8)	73.0 (33.11)	4	24	13.6/6.8	27.3/13.6
5	**HS14F5BS**	**HSP14F5BS**	17.00 (431.8)	14.00 (355.6)	9.00 (228.6)	100.0 (45.36)	4	24	22.7/11.4	45.5/22.7
7.5	**HS14F7.5BS**	**HSP14F7.5BS**	17.00 (431.8)	14.00 (355.6)	9.00 (228.6)	140.0 (63.50)	4	24	34.1/17.0	68.2/34.1
10	**HS14F10BS**	**HSP14F10BS**	17.00 (431.8)	14.00 (355.6)	9.00 (228.6)	175.0 (79.38)	4	24	45.5/22.7	90.9/45.5

Group 5: Export 190/200/208/220/380/400/415/440 Volt Primary, 110/220 Secondary, 50/60 Hz Copper wound
Export 200/208/230/400/415/460 Volt Primary, 115/230 Secondary, 50/60 Hz Copper wound
Export 208/240/415/480 Volt Primary, 120/240 Secondary, 60 Hz only Copper wound

CE

kVA	Catalog Number Group 1 Rolled Steel	Catalog Number Group 2 Stainless Steel [3]	Height in (mm)	Width in (mm)	Depth in (mm)	Approx. Ship Weight lbs (kg)	Design Style [1]	Elec Conn [1]	Primary Amps [2]	Secondary Amps
Encapsulated, Copper Wound										
1	**HS14F1CS–CE**	**HSP14F1CS–CE**	12.00 (304.8)	10.00 (254.0)	7.00 (177.8)	52.0 (23.6)	4	24	4.5/2.3	9.1/4.5
1.5	**HS14F1.5CS–CE**	**HSP14F1.5CS–CE**	12.00 (304.8)	10.00 (254.0)	7.00 (177.8)	55.0 (25.0)	4	24	6.8/3.4	13.6/6.8
2	**HS14F2CS–CE**	**HSP14F2CS–CE**	12.00 (304.8)	10.00 (254.0)	7.00 (177.8)	62.0 (28.1)	4	24	9.1/4.5	18.2/9.1
3	**HS14F3CS–CE**	**HSP14F3CS–CE**	17.00 (431.8)	14.00 (355.6)	9.00 (228.6)	142.0 (64.4)	4	24	13.6/6.8	27.3/13.6
5	**HS14F5CS–CE**	**HSP14F5CS–CE**	17.00 (431.8)	14.00 (355.6)	9.00 (228.6)	146.0 (66.2)	4	24	22.7/11.4	45.5/22.7
7.5	**HS14F7.5CS–CE**	**HSP14F7.5CS–CE**	17.00 (431.8)	14.00 (355.6)	9.00 (228.6)	175.0 (79.4)	4	24	34.1/17.0	68.2/34.1

Notes:

1. Design Styles and Electrical Connections can be found at the end of the Non-Ventilated Distribution Transformers section.
2. Amperage calculated at 220/440 Volts on primary. UL Listed. 240 and 480 V not available at 50 Hz.
3. Contact Technical Services for other enclosure types.

© July 2020

Selection Tables: Three Phase

Group A: 480 Volt Δ Primary, 208Y/120 Secondary, 60 Hz

kVA	Catalog Number Group I Rolled Steel	Catalog Number Group II Stainless Steel [3]	Height in (mm)	Width in (mm)	Depth in (mm)	Approx. Ship Weight lbs (kg)	Design Style [1]	Elec Conn [1]	Primary Amps	Secondary Amps
3	**HT1F3AS**	**HTP1F3AS**	13.00 (330.2)	16.00 (406.4)	9.00 (228.6)	105.0 (47.63)	4	27	3.6	8.3
6	**HT1F6AS**	**HTP1F6AS**	13.00 (330.2)	16.00 (406.4)	9.00 (228.6)	150.0 (68.03)	4	27	7.2	16.6
9	**HT1F9AS**	**HTP1F9AS**	17.00 (431.8)	20.00 (508.0)	11.00 (279.4)	250.0 (113.40)	4	27	10.8	25.0
15	**HT1F15AS**	**HTP1F15AS**	17.00 (431.8)	20.00 (508.0)	11.00 (279.4)	261.0 (118.39)	4	27	18.1	41.7
30	**HT1F30AS**	**HTP1F30AS**	30.00 (762.0)	29.00 (736.6)	12.00 (304.8)	696.0 (315.70)	4	27	36.1	83.4
45	**HT1F45AS**	**HTP1F45AS**	30.00 (762.0)	29.00 (736.6)	12.00 (304.8)	844.0 (382.83)	4	27	54.2	125.0

Group B: 208 Volt Δ Primary, 208Y/120 Secondary, 60 Hz

kVA	Catalog Number Group I Rolled Steel	Catalog Number Group II Stainless Steel [3]	Height in (mm)	Width in (mm)	Depth in (mm)	Approx. Ship Weight lbs (kg)	Design Style [1]	Elec Conn [1]	Primary Amps	Secondary Amps
3	**HT3F3AS**	**HTP3F3AS**	13.00 (330.2)	16.00 (406.4)	9.00 (228.6)	97.0 (44.00)	4	26	7.2	8.3
6	**HT3F6AS**	**HTP3F6AS**	13.00 (330.2)	16.00 (406.4)	9.00 (228.6)	150.0 (68.03)	4	26	14.4	16.6
9	**HT3F9AS**	**HTP3F9AS**	17.00 (431.8)	20.00 (508.0)	11.00 (279.4)	256.0 (116.12)	4	26	21.7	25.0

Group C: 480 Volt Δ Primary,240 Volt Δ Secondary with 120 V reduced capacity center tap, 60 Hz [2]

kVA	Catalog Number Group I Rolled Steel	Catalog Number Group II Stainless Steel [3]	Height in (mm)	Width in (mm)	Depth in (mm)	Approx. Ship Weight lbs (kg)	Design Style [1]	Elec Conn [1]	Primary Amps	Secondary Amps
3	**HT5F3AS**	**HTP5F3AS**	13.00 (330.2)	16.00 (406.4)	9.00 (228.6)	105.0 (47.63)	4	28	3.6	7.2
6	**HT5F6AS**	**HTP5F6AS**	13.00 (330.2)	16.00 (406.4)	9.00 (228.6)	150.0 (68.03)	4	28	7.2	14.4
9	**HT5F9AS**	**HTP5F9AS**	17.00 (431.8)	20.00 (508.0)	11.00 (279.4)	250.0 (113.40)	4	28	10.8	21.7
15	**HT5F15AS**	**HTP5F15AS**	17.00 (431.8)	20.00 (508.0)	11.00 (279.4)	305.0 (138.35)	4	28	18.1	36.1
30	**HT5F30AS**	**HTP5F30AS**	30.00 (762.0)	29.00 (736.6)	12.00 (304.8)	698.0 (316.61)	4	28	36.1	72.2
45	**HT5F45AS**	**HTP5F45AS**	30.00 (762.0)	29.00 (736.6)	12.00 (304.8)	876.0 (397.35)	4	28	54.2	108.3

Group D: 240 Volt Δ Primary, 208Y/120 Secondary, 60 Hz

kVA	Catalog Number Group I Rolled Steel	Catalog Number Group II Stainless Steel [3]	Height in (mm)	Width in (mm)	Depth in (mm)	Approx. Ship Weight lbs (kg)	Design Style [1]	Elec Conn [1]	Primary Amps	Secondary Amps
3	**HT6F3AS**	**HTP6F3AS**	13.00 (330.2)	16.00 (406.4)	9.00 (228.6)	97.0 (44.00)	4	25	7.2	8.3
6	**HT6F6AS**	**HTP6F6AS**	13.00 (330.2)	16.00 (406.4)	9.00 (228.6)	150.0 (68.03)	4	25	14.4	16.6
9	**HT6F9AS**	**HTP6F9AS**	17.00 (431.8)	20.00 (508.0)	11.00 (279.4)	256.0 (116.12)	4	25	21.7	25.0

Notes:
1. Design Styles and Electrical Connections can be found at the end of the Non-Ventilated Distribution Transformers section.
2. Refer to *Capacity of Center Tap in Center Tap Delta Transformers* at the beginning of this section.
3. Contact Technical Services for other enclosure types.

© July 2020

Selection Tables: Three Phase

Group E: 480 Volt Δ Primary, 380Y/220 Secondary, 60 Hz

kVA	Catalog Number Group I Rolled Steel	Catalog Number Group II Stainless Steel [2]	Height in (mm)	Width in (mm)	Depth in (mm)	Approx. Ship Weight lbs (kg)	Design Style [1]	Elec Conn [1]	Primary Amps	Secondary Amps
3	**HT79F3AS**	**HTP79F3AS**	13.00 (330.2)	16.00 (406.4)	9.00 (228.6)	121.0 (54.88)	4	29	3.6	4.6
6	**HT79F6AS**	**HTP79F6AS**	13.00 (330.2)	16.00 (406.4)	9.00 (228.6)	150.0 (68.03)	4	29	7.2	9.1
9	**HT79F9AS**	**HTP79F9AS**	17.00 (431.8)	20.00 (508.0)	11.00 (279.4)	255.0 (115.7)	4	29	10.8	13.6

Group F: 600 Volt Δ Primary, 208Y/120 Secondary, 60 Hz

kVA	Catalog Number Group I Rolled Steel	Catalog Number Group II Stainless Steel [2]	Height in (mm)	Width in (mm)	Depth in (mm)	Approx. Ship Weight lbs (kg)	Design Style [1]	Elec Conn [1]	Primary Amps	Secondary Amps
3	**HT7F3AS**	**HTP7F3AS**	13.00 (330.2)	16.00 (406.4)	9.00 (228.6)	116.0 (52.62)	4	30	2.9	8.3
6	**HT7F6AS**	**HTP7F6AS**	13.00 (330.2)	16.00 (406.4)	9.00 (228.6)	150.0 (68.03)	4	30	5.8	16.6
9	**HT7F9AS**	**HTP7F9AS**	17.00 (431.8)	20.00 (508.0)	11.00 (279.4)	225.0 (115.67)	4	30	8.7	25.0

Group G: 208 Volt Δ Primary, 480Y/277 Secondary, 60 Hz

kVA	Catalog Number Group I Rolled Steel	Catalog Number Group II Stainless Steel [2]	Height in (mm)	Width in (mm)	Depth in (mm)	Approx. Ship Weight lbs (kg)	Design Style [1]	Elec Conn [1]	Primary Amps	Secondary Amps
3	**HT84F3AS**	**HTP84F3AS**	13.00 (330.2)	16.00 (406.4)	9.00 (228.6)	97.0 (44.00)	4	31	8.3	3.6
6	**HT84F6AS**	**HTP84F6AS**	13.00 (330.2)	16.00 (406.4)	9.00 (228.6)	150.0 (68.03)	4	31	16.6	7.2
9	**HT84F9AS**	**HTP84F9AS**	17.00 (431.8)	20.00 (508.0)	11.00 (279.4)	256.0 (116.12)	4	31	25.0	10.8

Group H: 240 Volt Δ Primary, 480Y/277 Secondary, 60 Hz

kVA	Catalog Number Group I Rolled Steel	Catalog Number Group II Stainless Steel [2]	Height in (mm)	Width in (mm)	Depth in (mm)	Approx. Ship Weight lbs (kg)	Design Style [1]	Elec Conn [1]	Primary Amps	Secondary Amps
3	**HT85F3AS**	**HTP85F3AS**	13.00 (330.2)	16.00 (406.4)	9.00 (228.6)	97.0 (44.00)	4	32	7.2	3.6
6	**HT85F6AS**	**HTP85F6AS**	13.00 (330.2)	16.00 (406.4)	9.00 (228.6)	150.0 (68.03)	4	32	14.4	7.2
9	**HT85F9AS**	**HTP85F9AS**	17.00 (431.8)	20.00 (508.0)	11.00 (279.4)	256.0 (116.12)	4	32	21.6	10.8

Group J: 480 Volt Δ Primary, 480Y/277 Secondary, 60 Hz

kVA	Catalog Number Group I Rolled Steel	Catalog Number Group II Stainless Steel [2]	Height in (mm)	Width in (mm)	Depth in (mm)	Approx. Ship Weight lbs (kg)	Design Style [1]	Elec Conn [1]	Primary Amps	Secondary Amps
3	**HT81F3AS**	**HTP81F3AS**	13.00 (330.2)	16.00 (406.4)	9.00 (228.6)	121.0 (54.88)	4	33	3.6	3.6
6	**HT81F6AS**	**HTP81F6AS**	13.00 (330.2)	16.00 (406.4)	9.00 (228.6)	150.0 (68.03)	4	33	7.2	7.2
9	**HT81F9AS**	**HTP81F9AS**	17.00 (431.8)	20.00 (508.0)	11.00 (279.4)	255.0 (115.7)	4	33	10.8	10.8
15	**HT81F15AS**	**HTP81F15AS**	17.00 (431.8)	20.00 (508.0)	11.00 (279.4)	261.0 (118.39)	4	33	18.1	18.1
30	**HT81F30AS**	**HTP81F30AS**	30.00 (762.0)	29.00 (736.6)	12.00 (304.8)	696.0 (315.70)	4	33	36.1	36.1
45	**HT81F45AS**	**HTP81F45AS**	30.00 (762.0)	29.00 (736.6)	12.00 (304.8)	844.0 (382.83)	4	33	54.2	54.2

Notes:

1. Design Styles and Electrical Connections can be found at the end of the Non-Ventilated Distribution Transformers section.
2. Contact Technical Services for other enclosure types.

© July 2020

Design Styles

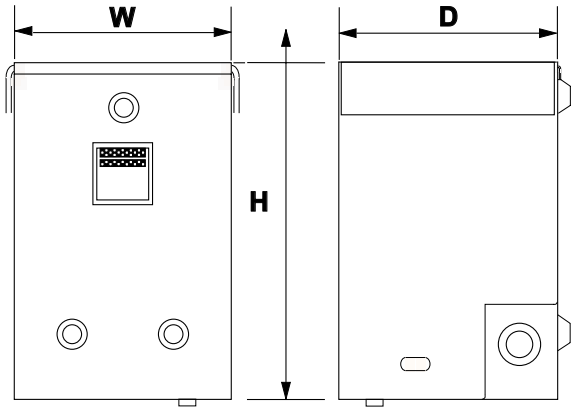

Style 2 - Non-Encapsulated

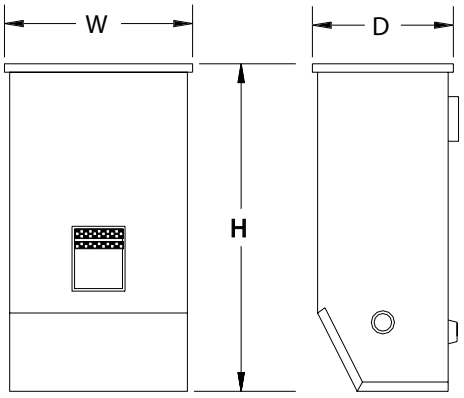

Style 3 - Encapsulated

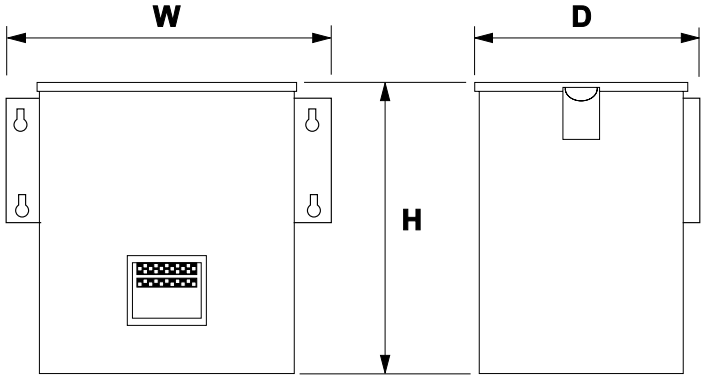

Style 4 - Encapsulated

Customized Enclosures - Contact Technical Services

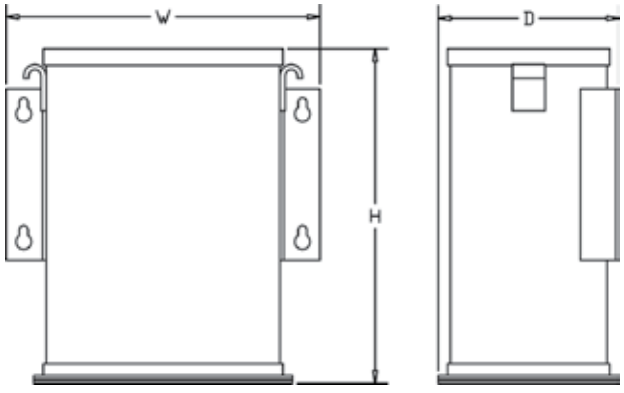

Style 5 - Encapsulated

Available for all encapsulated kVA sizes (For Type 4, 12 and 4X)

© July 2020

Electrical Connections (Single Phase)

240 X 480 Volt Primary
120/240 Volt Secondary
Taps: None

15

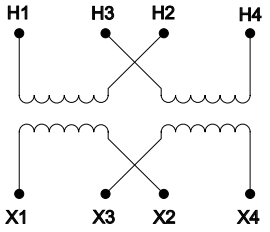

Primary Voltage	Interconnect	Connect Lines to
480	H2 to H3	H1 & H4
240	H1 to H3 H2 to H4	H1 & H4
Secondary Voltage	**Interconnect**	**Connect Lines to**
240	X2 to X3	X1 & X4
120-0-120	X2 to X3 X2 to ⏚	X1-X2-X4
120	X1 to X3 X2 to X4	X1 & X4
HS1 Series		

240 X 480 Volt Primary
120/240 Volt Secondary
Taps: None

16

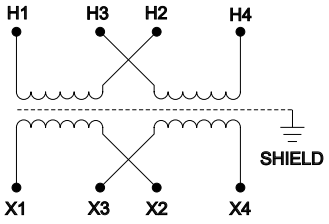

Primary Voltage	Interconnect	Connect Lines to
480	H2 to H3	H1 & H4
240	H1 to H3 H2 to H4	H1 & H4
Secondary Voltage	**Interconnect**	**Connect Lines to**
240	X2 to X3	X1 & X4
120-0-120	X2 to X3 X2 to ⏚	X1-X2-X4
120	X1 to X3 X2 to X4	X1 & X4
HS1 Series		

240 X 480 Volt Primary
120/240 Volt Secondary
Taps: 2, 2½% FCAN & FCBN

17

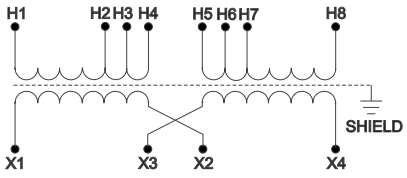

Primary Voltage	Interconnect	Connect Lines to
504	H4 to H5	H1 & H8
492	H3 to H5	H1 & H8
480	H3 to H6	H1 & H8
468	H2 to H6	H1 & H8
456	H2 to H7	H1 & H8
252	H1 to H5 H4 to H8	H1 & H8
240	H1 to H6 H3 to H8	H1 & H8
228	H1 to H7 H2 to H8	H1 & H8
Secondary Voltage	**Interconnect**	**Connect Lines to**
240	X2 to X3	X1 & X4
120-0-120	X2 to X3 X2 to ⏚	X1-X2-X4
120	X1 to X3 X2 to X4	X1 & X4
HS5 Series		

240 X 480 Volt Primary,
120/240 Volt Secondary
Taps: 2, 2½% FCAN; 4, 2½% FCBN

18

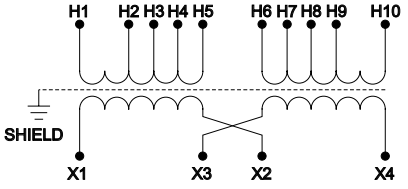

Primary Voltage	Interconnect	Connect Lines to
504	H5 to H6	H1 & H10
492	H4 to H6	H1 & H10
480	H4 to H7	H1 & H10
468	H3 to H7	H1 & H10
456	H3 to H8	H1 & H10
444	H2 to H8	H1 & H10
432	H2 to H9	H1 & H10
252	H1 to H6 H5 to H10	H1 & H10
240	H1 to H7 H4 to H10	H1 & H10
228	H1 to H8 H3 to H10	H1 & H10
216	H1 to H9 H2 to H10	H1 & H10
Secondary Voltage	**Interconnect**	**Connect Lines to**
240	X2 to X3	X1 & X4
120-0-120	X2 to X3 X2 to ⏚	X1-X2-X4
120	X1 to X3 X2 to X4	X1 & X4
HS5 Series		

120/208/240/277 Volt Primary
120/240 Volt Secondary
Taps: None

19

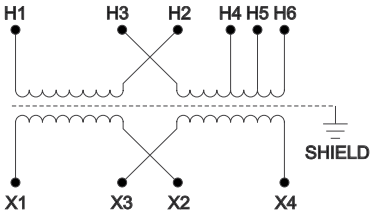

Primary Voltage	Interconnect	Connect Lines to
277	H2 to H3	H1 & H6
240	H2 to H3	H1 & H5
208	H2 to H3	H1 & H4
120	H1 to H3 H2 to H5	H1 & H5
Secondary Voltage	**Interconnect**	**Connect Lines to**
240	X2 to X3	X1 & X4
120-0-120	X2 to X3 X2 to ⏚	X1-X2-X4
120	X1 to X3 X2 to X4	X1 & X4
HS12 Series (1 kVA only)		

⏚ = Earth Ground

120/208/240/277 Volt Primary
120/240 Volt Secondary
Taps: None

20

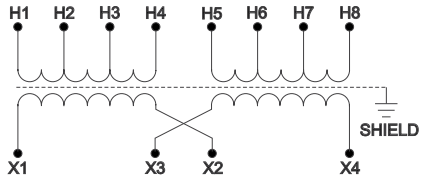

Primary Voltage	Interconnect	Connect Lines to
277	H4 to H5	H1 & H8
240	H3 to H6	H1 & H8
208	H2 to H7	H1 & H8
120	H1 to H6 H3 to H8	H1 & H8
Secondary Voltage	**Interconnect**	**Connect Lines to**
240	X2 to X3	X1 & X4
120-0-120	X2 to X3 X2 to ⏚	X1-X2-X4
120	X1 to X3 X2 to X4	X1 & X4
HS12 Series		

Note:

Connect the electrostatic shield to the equipment ground (green) or to both the equipment ground and the system ground (white). Specifications are subject to change without notice.

© July 2020

Electrical Connections (Single Phase)

600 Volt Primary,
120/240 Volt Secondary
Taps: None

21

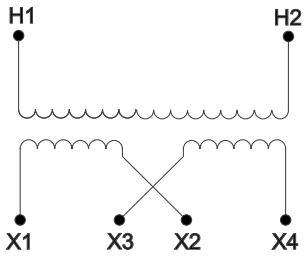

Primary Voltage	Interconnect	Connect Lines to
600		H1 & H2
Secondary Voltage	**Interconnect**	**Connect Lines to**
240	X2 to X3	X1 & X4
120-0-120	X2 to X3 X2 to ⏚	X1, X2 & X4
120	X1 to X3 X2 to X4	X1 & X4
HS10 Series		

Note: 1 through 2 kVA units have electrostatic shielding.

190/200/208/220/380/400/415/440 Volt Pri.
110/220 Volt Secondary
Taps: None

24

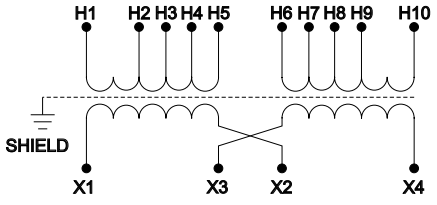

Primary Voltage	Interconnect	Connect Lines to
440/460/480	H5 to H6	H1 & H10
415	H4 to H7	H1 & H10
400/415	H3 to H8	H1 & H10
380/400	H2 to H9	H1 & H10
220/230/240	H1 to H6, H5 to H10	H1 & H10
208	H1 to H7, H4 to H10	H1 & H10
200/208	H1 to H8, H3 to H10	H1 & H10
190/200/208	H1 to H9 H2 to H10	H1 & H10
Secondary Voltage	**Interconnect**	**Connect Lines to**
220/230/240	X2 to X3	X1 & X4
110,220/115, 230/120,240	X2 to X3 X2 to ⏚	X1, X2 & X4
110/115/120	X1 to X3 X2 to X4	X1 & X4
HS14 Series		

600 Volt Primary
120/240 Volt Secondary
Taps: 2, 5% FCBN

22

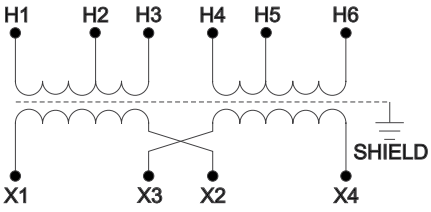

Primary Voltage	Interconnect	Connect Lines to
600	H3 to H4	H1 & H6
570	H2 to H4	H1 & H6
540	H2 to H5	H1 & H6
Secondary Voltage	**Interconnect**	**Connect Lines to**
240	X2 to X3	X1 & X4
120-0-120	X2 to X3 X2 to ⏚	X1-X2-X4
120	X1 to X3 X2 to X4	X1 & X4
HS10 Series		

⏚ = Earth Ground

190/200/208/220/380/400/415/440 Volt Pri.
110/220 Volt Secondary
Taps: None

23

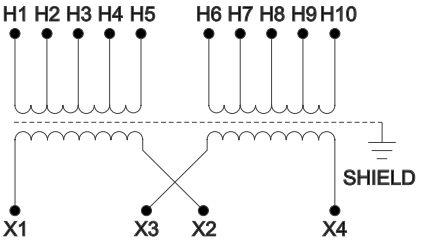

Primary Voltage	Interconnect	Connect Lines to
440/460/480	H5 to H6	H1 & H10
415	H4 to H6	H1 & H9
400/415	H3 to H6	H1 & H8
380/400	H2 to H6	H1 & H7
220/230/240	H1 to H6 H5 to H10	H1 & H10
208	H1 to H6 H4 to H9	H1 & H9
200/208	H1 to H6 H3 to H8	H1 & H8
190/200/208	H1 to H6 H2 to H7	H1 & H7
Secondary Voltage	**Interconnect**	**Connect Lines to**
220/230/240	X2 to X3	X1 & X4
110,220/115, 230/120,240	X2 to X3 X2 to ⏚	X1, X2 & X4
110/115/120	X1 to X3 X2 to X4	X1 & X4
HS14F1BS		

Note:

Connect the electrostatic shield to the equipment ground (green) or to both the equipment ground and the system ground (white). Specifications are subject to change without notice.

© July 2020

Electrical Connections (Three Phase)

240 Δ Volt Primary
208Y/120 Volt Secondary
Taps: 2, 5% FCBN

25

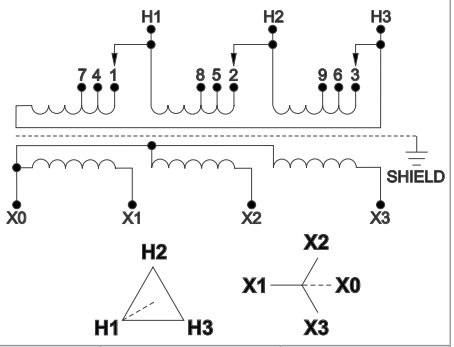

Primary Voltage	Connect Taps	Connect Lines To
240	1-H1 & 2-H2 & 3-H3	H1, H2, H3
228	4-H1 & 5-H2 & 6-H3	H1, H2, H3
216	7-H1 & 8-H2 & 9-H3	H1, H2, H3
Secondary Voltage		**Connect Lines To**
208		X1, X2, & X3
120		X0, X1, X2, X3

HT6 Series

208 Δ Volt Primary
208Y/120 Volt Secondary
Taps: 2, 5% FCBN

26

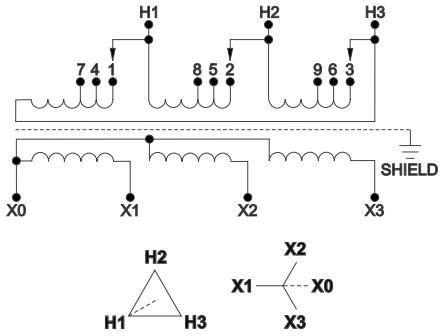

Primary Voltage	Connect Taps	Connect Lines To
208	1-H1 & 2-H2 & 3-H3	H1, H2, H3
198	4-H1 & 5-H2 & 6-H3	H1, H2, H3
187	7-H1 & 8-H2 & 9-H3	H1, H2, H3
Secondary Voltage		**Connect Lines To**
208		X1, X2, & X3
120		X0, X1, X2, X3

HT3 Series

480 Δ Volt Primary
208Y/120 Volt Secondary
Taps: 2, 5% FCBN

27

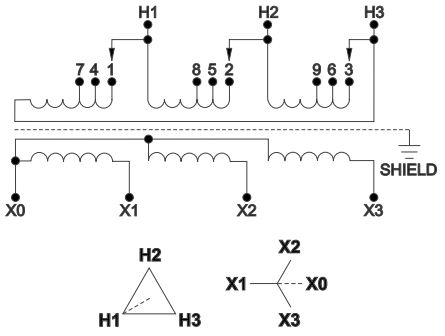

Primary Voltage	Interconnect	Connect Lines to
480	1-H1 & 2-H2 & 3-H3	H1, H2, H3
456	4-H1 & 5-H2 & 6-H3	H1, H2, H3
432	7-H1 & 8-H2 & 9-H3	H1, H2, H3
Secondary Voltage		**Connect Lines to**
208		X1, X2, & X3
120		X0, X1, X2, X3

HT1 Series

480 Δ Volt Primary
240 Δ w/120 CT Volt Secondary
Taps: 2, 5% FCBN

28

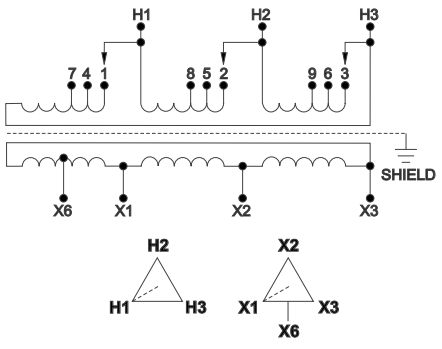

Primary Voltage	Connect Taps	Connect Lines To
480	1-H1 & 2-H2 & 3-H3	H1, H2, H3
456	4-H1 & 5-H2 & 6-H3	H1, H2, H3
432	7-H1 & 8-H2 & 9-H3	H1, H2, H3
Secondary Voltage	**Interconnect**	**Connect Lines To**
240		X1, X2, X3
120-0-120	X6 to ⏚	X1-X6-X3

HT5 Series

480 Δ Volt Primary
380Y/220 Volt Secondary
Taps: 2, 5% FCBN

29

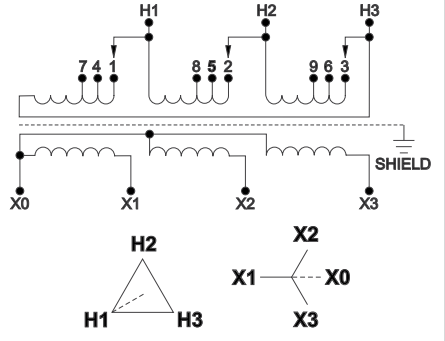

Primary Voltage	Interconnect	Connect Lines to
480	1-H1 & 2-H2 & 3-H3	H1, H2 & H3
456	4-H1 & 5-H2 & 6-H3	H1, H2 & H3
432	7-H1 & 8-H2 & 9-H3	H1, H2 & H3
Secondary Voltage	**Interconnect**	**Connect Lines to**
380		X1, X2, X3
220		X0, X1, X2, X3

HT79 Series

⏚ = Earth Ground

Notes:

Connect the electrostatic shield to the equipment ground (green) or to both the equipment ground and the system ground (white). Specifications are subject to change without notice.

© July 2020

Electrical Connections (Three Phase)

600 Δ Volt Primary
208Y/120 Volt Secondary
Taps: 2, 5% FCBN

30

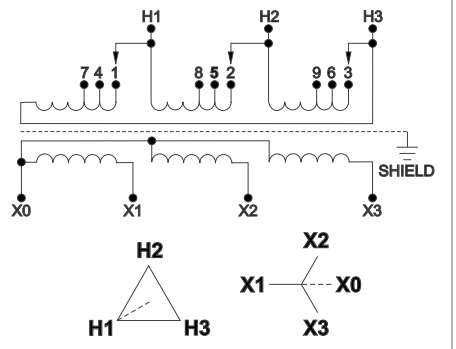

Primary Voltage	Connect Taps	Line Leads
600	1-H1 & 2-H2 & 3-H3	H1, H2, H3
570	4-H1 & 5-H2 & 6-H3	H1, H2, H3
540	7-H1 & 8-H2 & 9-H3	H1, H2, H3
Secondary Voltage		**Line Leads**
208		X1, X2, X3
120		X0, X1, X2, X3

HT7 Series

208 Δ Volt Primary
480Y/277 Volt Secondary
Taps: 2, 5% FCBN

31

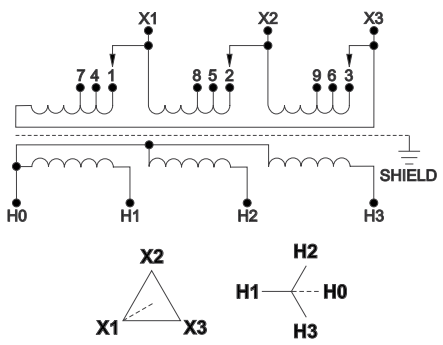

Primary Voltage	Connect Taps	Line Leads
208	1-X1 & 2-X2 & 3-X3	X1, X2, X3
198	4-X1 & 5-X2 & 6-X3	X1, X2, X3
187	7-X1 & 8-X2 & 9-X3	X1, X2, X3
Secondary Voltage		**Line Leads**
480		H1, H2, H3
277		H0, H1, H2, H3

HT84 Series

240 Δ Volt Primary
480Y/277 Volt Secondary
Taps: 2, 5% FCBN

32

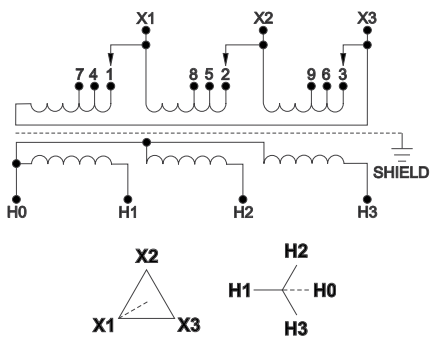

Primary Voltage	Connect Taps	Line Leads
240	1-X1 & 2-X2 & 3-X3	X1, X2, X3
228	4-X1 & 5-X2 & 6-X3	X1, X2, X3
216	7-X1 & 8-X2 & 9-X3	X1, X2, X3
Secondary Voltage		**Line Leads**
480		H1, H2, H3
277		H0, H1, H2, H3

HT85 Series

480 Δ Volt Primary
480Y/277 Volt Secondary
Taps: 2, 5% FCBN

33

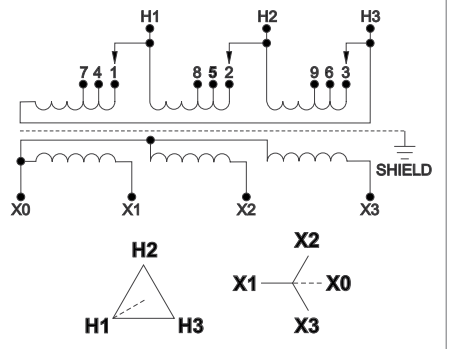

Primary Voltage	Interconnect	Connect Lines to
480	1-H1 & 2-H2 & 3-H3	H1, H2 & H3
456	4-H1 & 5-H2 & 6-H3	H1, H2 & H3
432	7-H1 & 8-H2 & 9-H3	H1, H2 & H3
Secondary Voltage	**Interconnect**	**Connect Lines to**
480		X1, X2, X3
277		X0, X1, X2, X3

HT81 Series

Notes:

Connect the electrostatic shield to the equipment ground (green) or to both the equipment ground and the system ground (white). Specifications are subject to change without notice.

© July 2020