iPixel LED Light Co. , Ltd

3W RGB LED Module



www.ipixelleds.com

Product Description

-This is a High Power RGB Module in a aluminum PCB board, each channel 3W

-When it light up all 3 color together in same time, the board will very hot and it request

-To mount into a another board for heat dispation , please notice the Voltage per color during application

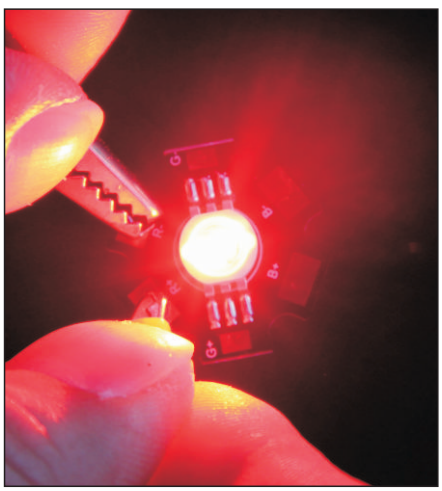

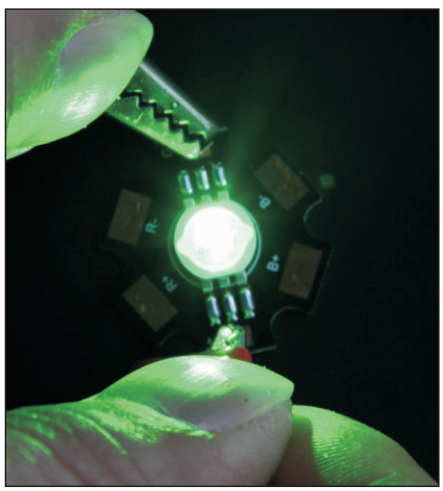

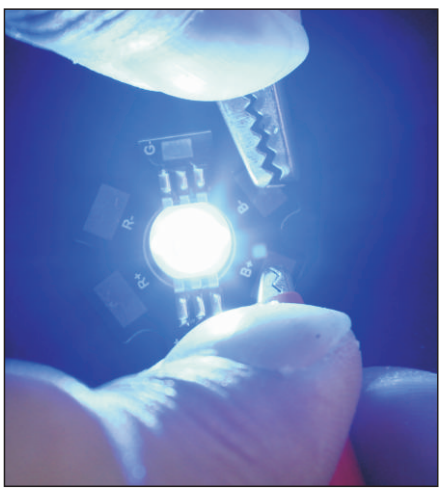

iPixel LED Light Co. , Ltd

Product Datasheet

Product Number	M018001MA3LZ
Light Source	Imitation lumen lamp beads
Beam Angle	140°
Size （mm）	18⌀
Emitting Color	RGB
Operating Voltage	R: 2.2-2.6V G: 3.2-3.8V B: 3.2-3.8V
Power (W/M)	W: 3.6W
wavelength	R: 620 G: 520 B: 460
Waterproof Rating	IP20
Operation Temperature	-30℃-50℃

Outline Dimension

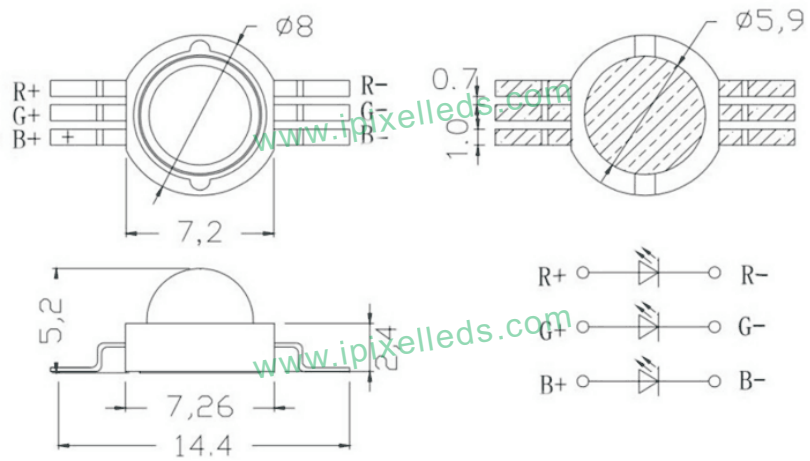

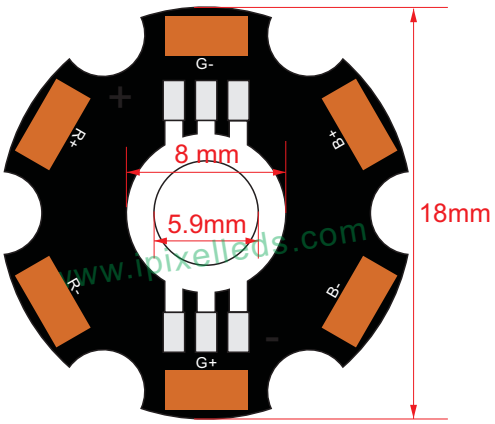

- R:2.2-2.6V
- G:3.2-3.8V
- B:3.2-3.8V

Add: A2 Building Ming Jin hai Industrial Park,Zhou shi Rd ,Shiyan,Baoan,Shenzhen,China. 518108

Tel: 0086-755-85257292 Web: www.ipixelleds.com Fax:0086-755-85257292 E-mail: inquiry@ipixelleds.com