1-800-383-7323 USA/CAN
www.energizer.com

ENERGIZER E92

AAA



Industry Standard Dimensions

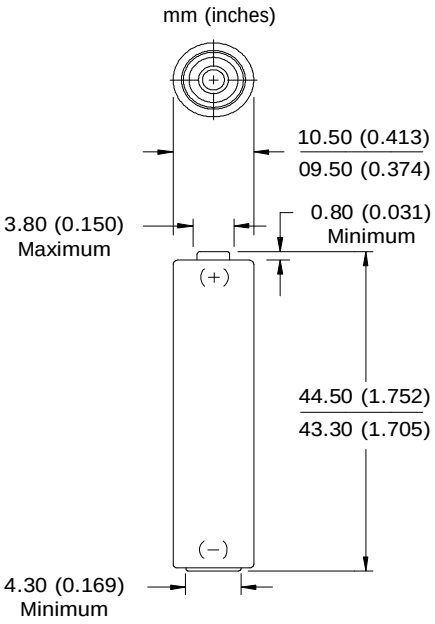

Specifications

Classification:	Alkaline
Chemical System:	Zinc-Manganese Dioxide (Zn/MnO_2) No added mercury or cadmium
Designation:	ANSI-24A, IEC-LR03
Nominal Voltage:	1.5 volts
Nominal IR:	150 to 300 milliohms (fresh)
Operating Temp:	-18°C to 55°C (0°F to 130°F)
Typical Weight:	11.5 grams (0.4 oz.)
Typical Volume:	3.8 cubic centimeters (0.2 cubic inch)
Jacket:	Plastic Label
Shelf Life:	10 years at 21°C
Terminal:	Flat Contact

Milliamp-Hours Capacity

Continuous discharge to 0.8 volts at 21°C

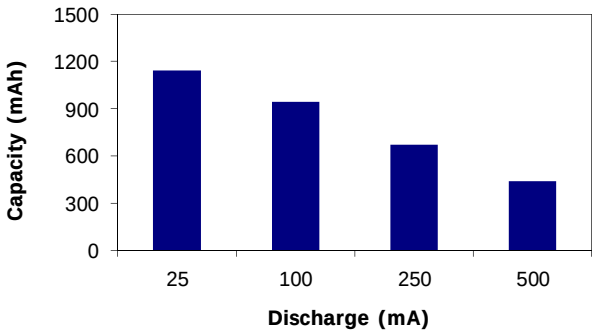

Industry Standard Tests (21°C)

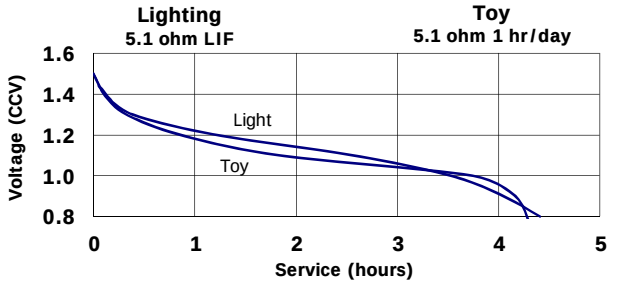

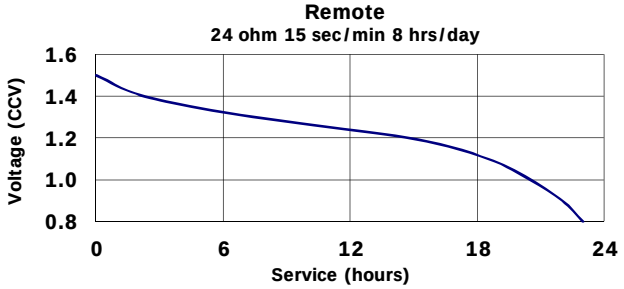

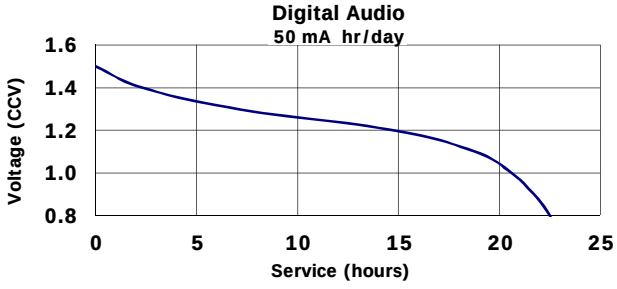

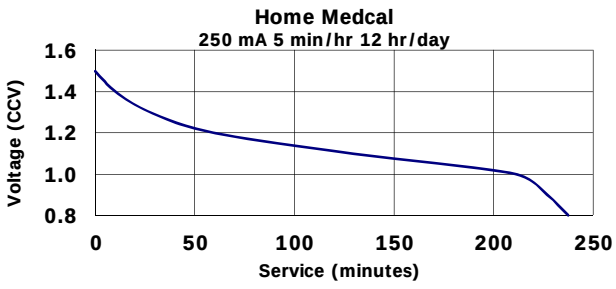

Important Notice

This data sheet contains typical information specific to products manufactured at the time of its publication.
Physical values are for reference purposes and not intended for specific calculations.

©Energizer Brands, LLC - Contents herein do not constitute a warranty.