VD56G3 S-Board: Hardware MIPI CSI-2 kit for the evaluation and integration of VD56G3 image sensor

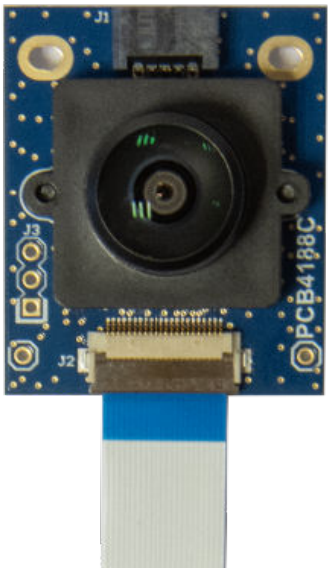

ST Bright Sense

Order code	Description
STEVAL-56G3MAI1	VD56G3 S-Board hardware kit

Features

- Comprehensive hardware kit including:
  - Sensor board that embeds VD56G3 image sensor with FFC output connector.
  - M12 lens holder screwed on the board.
  - Default nonglued lens that user can focus according to their needs or replace by another compatible lens.
  - Ribbon cable to connect directly to embedded processing boards.
- Highly versatile kit:
  - Flexibility to focus the provided nonglued lens to your needs.
  - Flexibility to replace the default lens by any other M12 or smaller lens.
  - Flexibility to use it on embedded processing platforms as is, or on computers when connected to the EVK Main kit from ST.
- Instant integration onto embedded processing platforms:
  - Native MIPI CSI-2 output and I²C communication interfaces.
  - FFC connector and associated cable provided for direct plug-and-play connection to the platform.
  - Various Linux drivers are available for free download on st.com to make software integration instant.
- Ready for sensor evaluation on PC:
  - Connect the VD56G3 S-Board kit to the generic EVK Main to turn it into a USB solution for PC-based evaluation.
  - Evaluation software GUI for PC is available for free download on st.com.

Description

The VD56G3 S-Board is a comprehensive and versatile hardware kit for evaluating and integrating the VD56G3 image sensor. It contains all the necessary hardware, from electronics to optics, to perform a thorough product evaluation or to integrate the product directly into the rest of the system in an instant.

The kit includes a sensor board embedding a VD56G3 image sensor with an FFC output connector, a M12 lens holder, a default nonglued lens, and a ribbon cable.

Integration onto embedded processing platforms is instantaneous thanks to the FFC connector and cable, which offer plug-and-play connection to platforms. Compatible Linux drivers are available for free download on st.com providing seamless software integration.

With its well-thought-out architecture, the VD56G3 S-Board offers maximum flexibility for customizing your setup. The nonglued lens embedded in the kit gives the flexibility to focus it to your needs or simply to remove it to use a different lens. Equipped with an M12 lens holder, the kit can be customized to your application with a broad range of M12 or smaller off-the-shelf lenses. Its standard FFC connector allows connecting cables of various lengths or pinout to adapt your setup.

The VD56G3 S-Board can also be used to perform sensor evaluation on a PC. It just needs to be connected to the generic EVK Main hardware from ST to be turned into a USB solution for PC-based evaluation. A complementary evaluation software GUI for PCs is available for free download on st.com.

lectronics sales office.

Figure 1. **Split view of the content of VD56G3 S-Board (STEVAL-56G3MAI)**

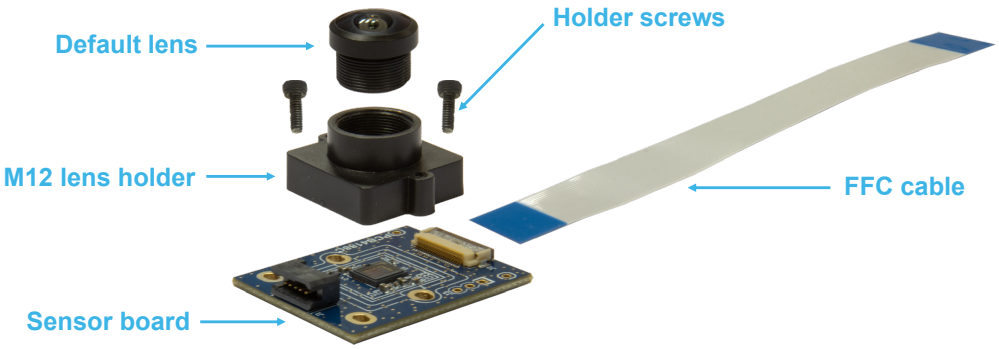

Figure 2. **Structure of the board included in VD56G3 S-Board (STEVAL-56G3MAI)**

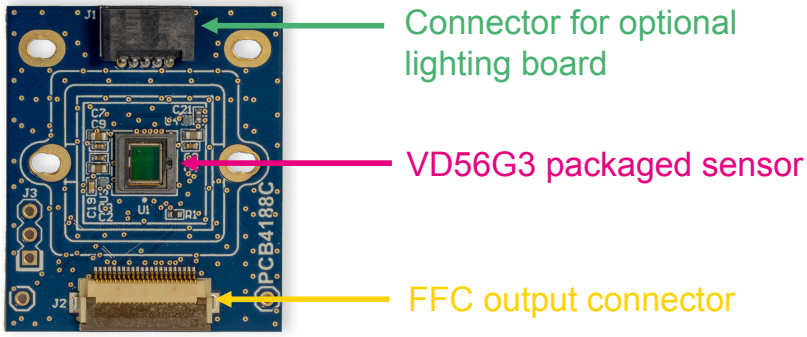

Figure 3. **Typical setup when using VD56G3 S-Board on an embedded processing platform**

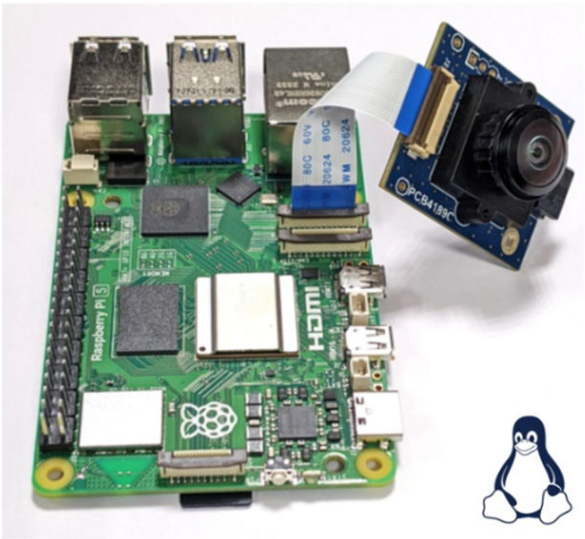

Downloaded from Arrow.com.

Table 1. Main technical specifications

Category	Item	Parameter	Specification
Imaging	Image sensor	Sensor feature	VD56G3
		Resolution	1.53 MP – 1124 x 1364
		Aspect ratio	5 : 6
		Chroma	Monochrome
		Shutter type	Global shutter
		Pixel size	2.61 µm
		Embedded features	Refer to VD56G3 documentation
Electronics	Board output	Connector type	FFC
		Pinout	22 pins (1)
		Connector reference	FH12-24S-0.5SH(55) by Hirose
		Image output format	MIPI CSI-2 (1 or 2 lanes) (2)
		Image data format	RAW8 - RAW10
		Control interface	I²C
	Cable	Cable pinout	22 pins (3)
		Cable reference	687722050002 by Würth
Mechanics	Overall	Total dimension - L x H x W	30 x 35 x 28 mm
	Board	Board dimension - L x H x W	30 x 35 x 8 mm
	Lens holder	Holder diameter	12 mm
		Holder height	20 mm
	Cable	Cable length	10 cm
Optics	Default lens in the kit	Lens reference	AB02816MG by Alaud Optical
		Aperture	F/1.6
		Optical format	1/2.7”
		Field of view	110° (H) | 58° (V) | 113° (D)
		Focal length	2.8 mm
		Depth of focus	28 cm to infinite
		Filter	Clear
	Recommended specifications for using a different lens	Lens mount	M12 (native) or smaller (with adapter)
		Lens thread	P 0.5
		Optical format (minimum)	1/4" - 4.61 mm
		Resolution - H x V (minimum)	1124 x 1364
		Pixel array size - H x V (minimum)	2.93 x 3.56 mm
		Pixel size (maximum)	2.61 µm
		Chief ray angle [CRA]	26° at 4.61 mm (4)
		Back focal length [BFL] (maximum)	13 mm

1. *For detailed pinout, refer to the CAD resources available on the hardware kit webpage.*
2. *To get USB output, the VD56G3 S-Board must be connected to the EVK Main kit by ST.*
3. *Other pinouts (ex: 15 pins) are possible by plugging other off-the-shelf cable adaptors available from various providers.*
4. *The CRA of the VD56G3 image sensor evolves linearly from 0° in the center to 26° on the edges (4.61 mm diagonal)*

Revision history

Table 2. **Document revision history**

Date	Version	Changes
17-Jun-2024	1	Initial release

IMPORTANT NOTICE – READ CAREFULLY

STMicroelectronics NV and its subsidiaries (“ST”) reserve the right to make changes, corrections, enhancements, modifications, and improvements to ST products and/or to this document at any time without notice. Purchasers should obtain the latest relevant information on ST products before placing orders. ST products are sold pursuant to ST’s terms and conditions of sale in place at the time of order acknowledgment.

Purchasers are solely responsible for the choice, selection, and use of ST products and ST assumes no liability for application assistance or the design of purchasers’ products.

No license, express or implied, to any intellectual property right is granted by ST herein.

Resale of ST products with provisions different from the information set forth herein shall void any warranty granted by ST for such product.

ST and the ST logo are trademarks of ST. For additional information about ST trademarks, refer to www.st.com/trademarks. All other product or service names are the property of their respective owners.

Information in this document supersedes and replaces information previously supplied in any prior versions of this document.

© 2024 STMicroelectronics – All rights reserved