STEVAL-CCA011V1

Filter-free stereo 2x2.5 W Class-D audio power amplifier demonstration board based on the TS2012FC

Data brief

Features

- Operating range from V_{CC} = 2.5 V to 5.5 V
- Dedicated standby mode active low for each channel
- Output power per channel: 1.15 W @5 V or 0.63 W @ 3.6 V into 8 Ω with 1% THD+N max
- Output power per channel: 1.85 W @5 V into 4 Ω with 1% THD+N max
- Output short-circuit protection
- Four gain select settings: 6, 12, 18, 24 dB
- Low current consumption
- PSRR: 63 dB typ @ 217 Hz with 6 dB gain
- Fast start-up phase: 8 ms
- Thermal shutdown protection
- RoHS compliant

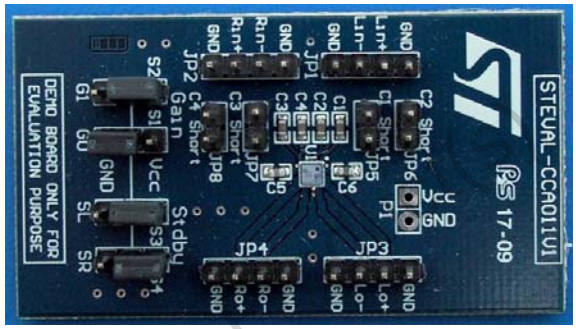

STEVAL-CCA011V1

Description

This demonstration board is based on TS2012FC that is a fully differential Class-D stereo power amplifier able to drive up to 1.15 W into an 8 Ω load at 5 V per channel.

It achieves better efficiency compared to typical Class-AB audio amps.

The device has four different gain settings that use two digital pins: G0 and G1. Pop and click reduction circuitry provides low on/off switch noise while allowing the device to start within 8 ms.

Two standby pins (active low) allow each channel to be switched off independently.

The TS2012FC also integrates output short-circuit protection and thermal shutdown protection and it is available in a 16-bumps Flip-Chip package.

Obsolete product(s) - Obsolete P

For further information contact your local STMicroelectronics sales office. www.st.com

1 Circuit schematics

Figure 1. Schematic diagram

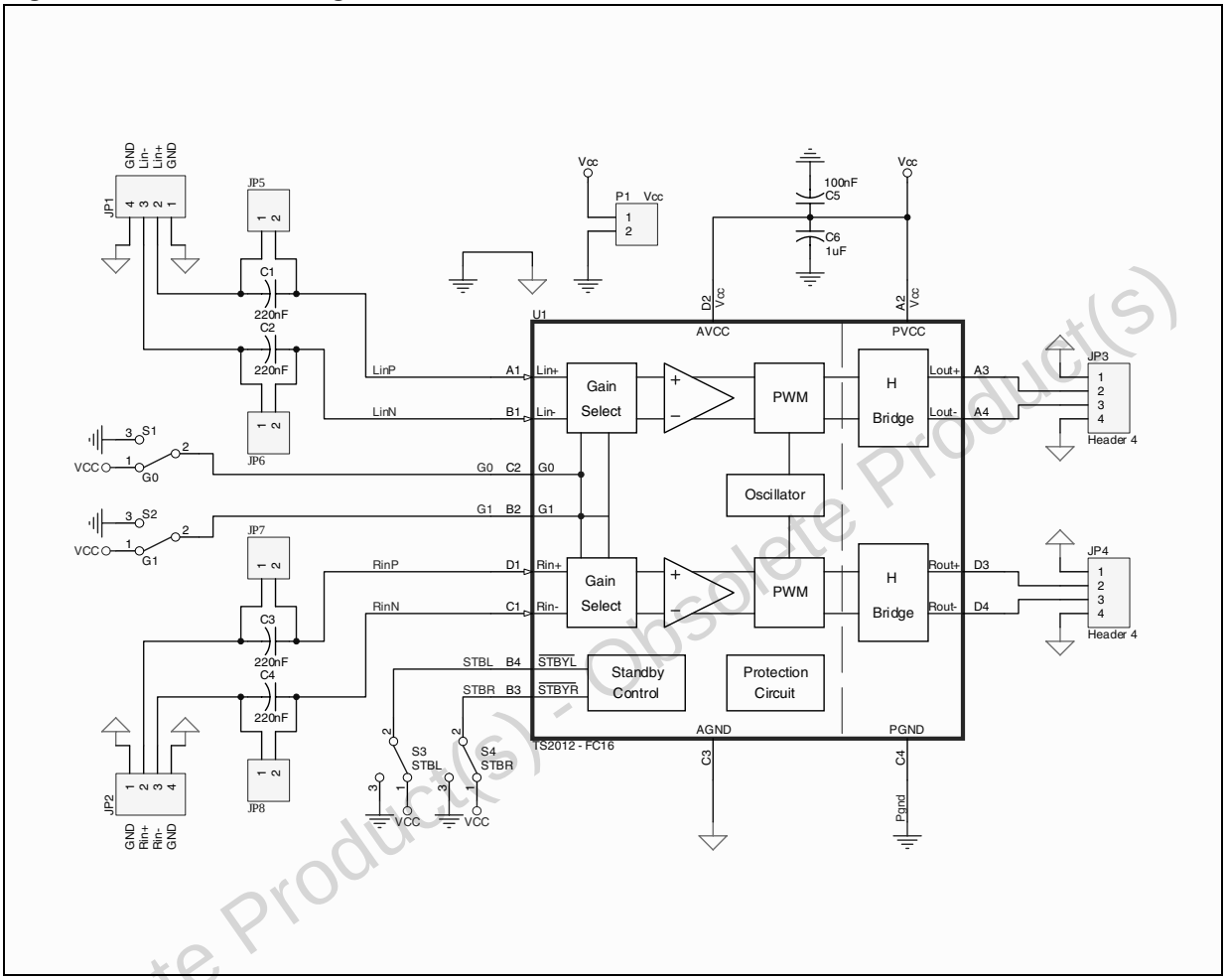

Obsolete Product(s) - Obsolete Product(s)

Table 1. Component list for the demonstration board

Designation	Quantity	Description
C1, C2, C3, C4	4	220 nF/16 V, SMD ceramic capacitor, 0603
C5	1	100 nF/16 V, SMD ceramic capacitor, 0603
C6	1	1 µF/16 V, SMD ceramic capacitor, 0603
P1, JP5, JP6, JP7, JP8	5	2-pin header 2.54 mm pitch
S1, S2, S3, S4	4	3-pin header 2.54 mm pitch
JP1, JP2, JP3, JP4	4	4-pin header 2.54 mm pitch
U1	1	TS2012EIJT

2 Demonstration board layout

The following figures depict the top view and layers of the demonstration board.

Figure 2. PCB top layer

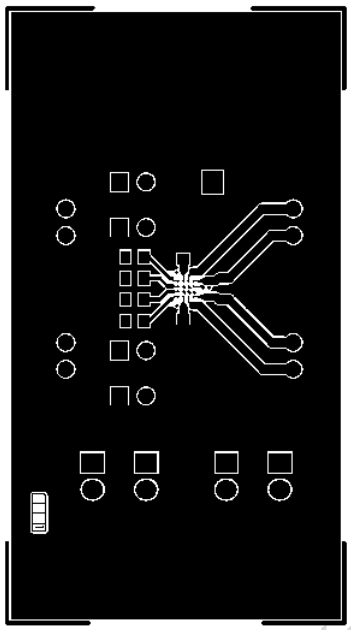

Figure 3. PCB middle layer 1

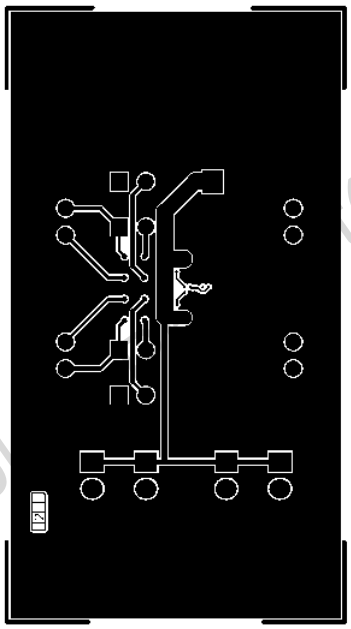

Figure 4. PCB middle layer 2

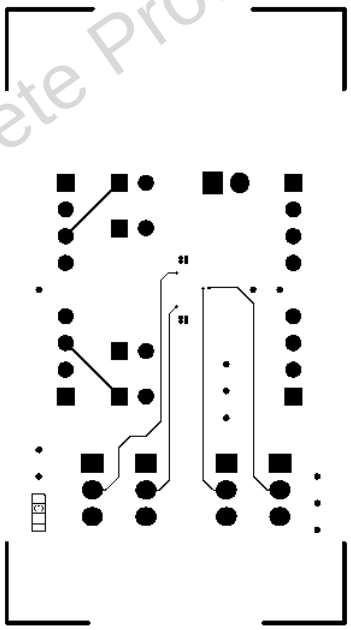

Figure 5. PCB bottom layer

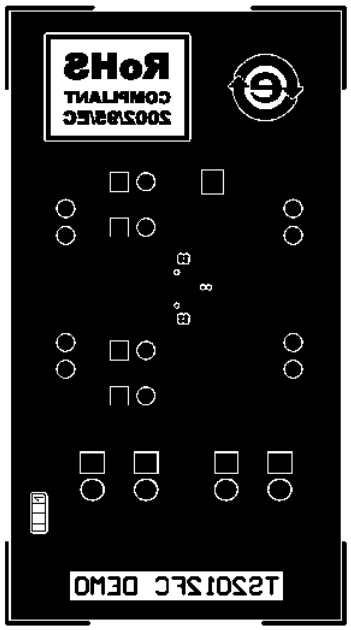

Obsolete Product(s) - Obsol t(s)

Figure 6. Top view and dimensions of the demonstration board

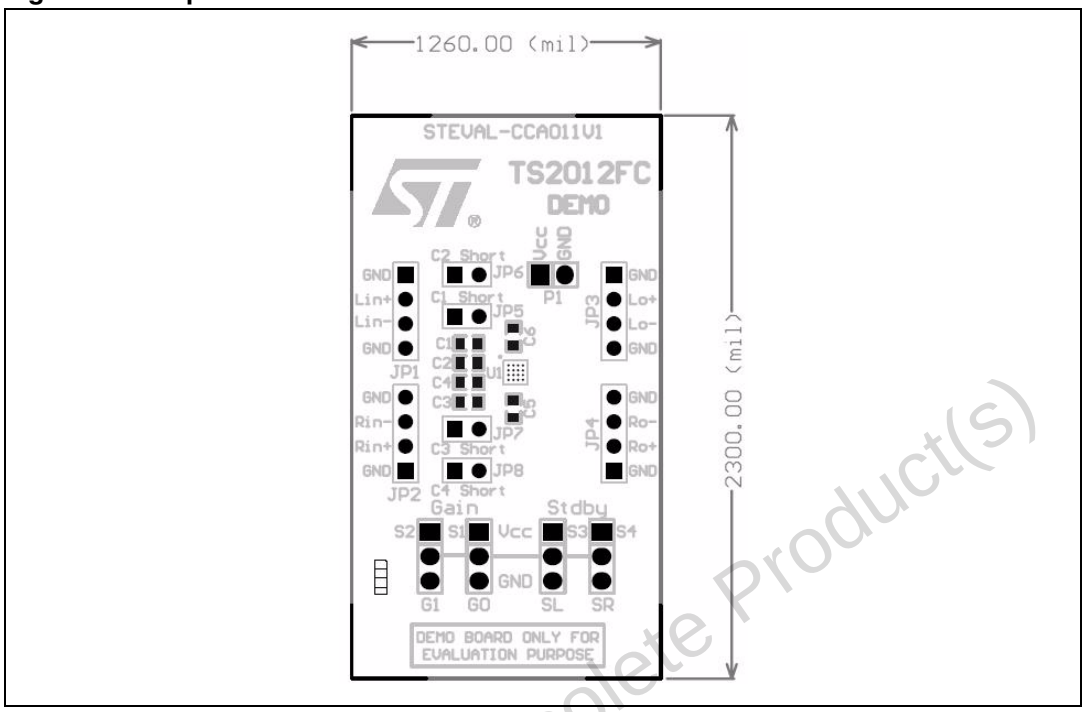

Obsolete Product(s) - Obsolete Product(s)

3 Revision history

Table 2. Document revision history

Date	Revision	Changes
03-Jun-2009	1	Initial release.

Obsolete Product(s) - Obsolete Product(s)

Please Read Carefully:

Information in this document is provided solely in connection with ST products. STMicroelectronics NV and its subsidiaries (“ST”) reserve the right to make changes, corrections, modifications or improvements, to this document, and the products and services described herein at any time, without notice.

All ST products are sold pursuant to ST’s terms and conditions of sale.

Purchasers are solely responsible for the choice, selection and use of the ST products and services described herein, and ST assumes no liability whatsoever relating to the choice, selection or use of the ST products and services described herein.

No license, express or implied, by estoppel or otherwise, to any intellectual property rights is granted under this document. If any part of this document refers to any third party products or services it shall not be deemed a license grant by ST for the use of such third party products or services, or any intellectual property contained therein or considered as a warranty covering the use in any manner whatsoever of such third party products or services or any intellectual property contained therein.

UNLESS OTHERWISE SET FORTH IN ST’S TERMS AND CONDITIONS OF SALE ST DISCLAIMS ANY EXPRESS OR IMPLIED WARRANTY WITH RESPECT TO THE USE AND/OR SALE OF ST PRODUCTS INCLUDING WITHOUT LIMITATION IMPLIED WARRANTIES OF MERCHANTABILITY, FITNESS FOR A PARTICULAR PURPOSE (AND THEIR EQUIVALENTS UNDER THE LAWS OF ANY JURISDICTION), OR INFRINGEMENT OF ANY PATENT, COPYRIGHT OR OTHER INTELLECTUAL PROPERTY RIGHT.

UNLESS EXPRESSLY APPROVED IN WRITING BY AN AUTHORIZED ST REPRESENTATIVE, ST PRODUCTS ARE NOT RECOMMENDED, AUTHORIZED OR WARRANTED FOR USE IN MILITARY, AIR CRAFT, SPACE, LIFE SAVING, OR LIFE SUSTAINING APPLICATIONS, NOR IN PRODUCTS OR SYSTEMS WHERE FAILURE OR MALFUNCTION MAY RESULT IN PERSONAL INJURY, DEATH, OR SEVERE PROPERTY OR ENVIRONMENTAL DAMAGE. ST PRODUCTS WHICH ARE NOT SPECIFIED AS "AUTOMOTIVE GRADE" MAY ONLY BE USED IN AUTOMOTIVE APPLICATIONS AT USER’S OWN RISK.

Resale of ST products with provisions different from the statements and/or technical features set forth in this document shall immediately void any warranty granted by ST for the ST product or service described herein and shall not create or extend in any manner whatsoever, any liability of ST.

Obsolete Product(s) - Obsolete Product(s)

ST and the ST logo are trademarks or registered trademarks of ST in various countries.

Information in this document supersedes and replaces all information previously supplied.

The ST logo is a registered trademark of STMicroelectronics. All other names are the property of their respective owners.

© 2009 STMicroelectronics - All rights reserved

STMicroelectronics group of companies

Australia - Belgium - Brazil - Canada - China - Czech Republic - Finland - France - Germany - Hong Kong - India - Israel - Italy - Japan - Malaysia - Malta - Morocco - Philippines - Singapore - Spain - Sweden - Switzerland - United Kingdom - United States of America

www.st.com