STEVAL-IDS001V2

Low data-rate, short-range USB dongle transceiver in 315 MHz band based on the SPIRIT1

Data brief

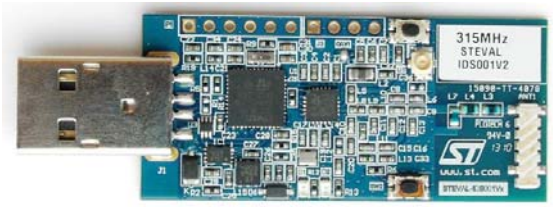

STEVAL-IDS001V2

Description

The STEVAL-IDS001V2 demonstration board is based on the SPIRIT1, which is a sub-GHz low power, low data-rate transceiver suitable for ISM bands. The board is equipped with an STM32L low power microcontroller to control the SPIRIT1. The board also features a USB connector for PC GUI interaction and firmware update. An optional JTAG connector (not mounted) allows the development of specific firmware on the microcontroller.

Features

- SPIRIT1 low power sub-GHz transceiver integrated in a USB dongle for direct PC connection
- STM32L microcontroller
- External components tuned for 315 MHz band
- Associated SPIRIT1 development kit includes: documentation, firmware for STM32L and GUI
- Optional debug connector (not mounted)
- USB interface
- Modulation schemes: 2-FSK, GFSK, MSK, GMSK, OOK, and ASK
- Air data rate: from 1 to 500 kbps
- Very low power consumption (9 mA RX and 21 mA TX at +11 dBm)
- Excellent receiver sensitivity performance (up to -118 dBm)
- Low duty cycle RX/TX operation mode
- Automatic acknowledgment, retransmission, and timeout protocol engine
- AES 128-bit encryption co-processor
- SPI interface for microcontroller
- RoHS compliant

For further information contact your local STMicroelectronics sales office. www.st.com

1 Schematic diagram

Figure 1. SPIRIT1 circuit schematic

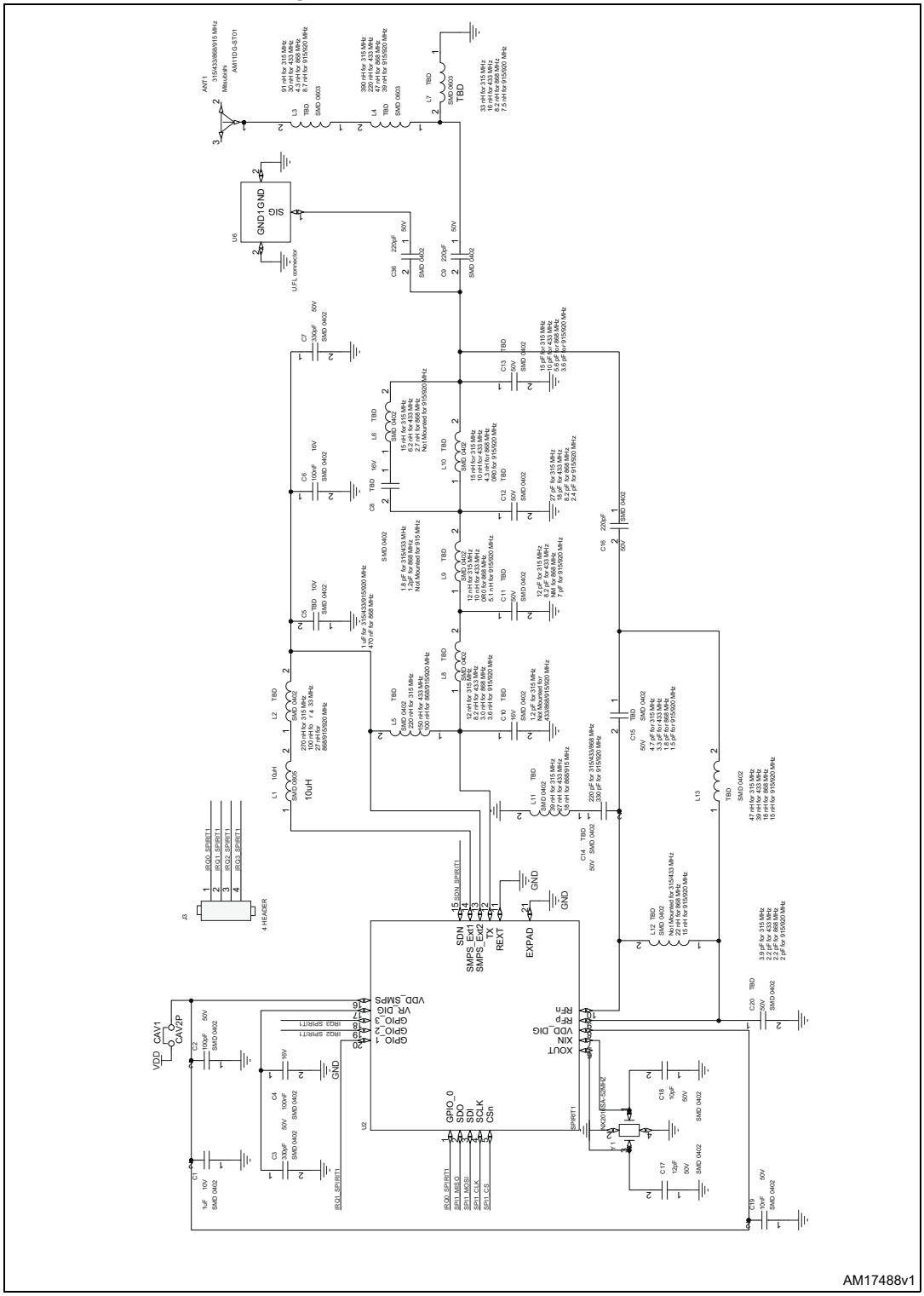

Figure 2. Oscillator circuit schematic

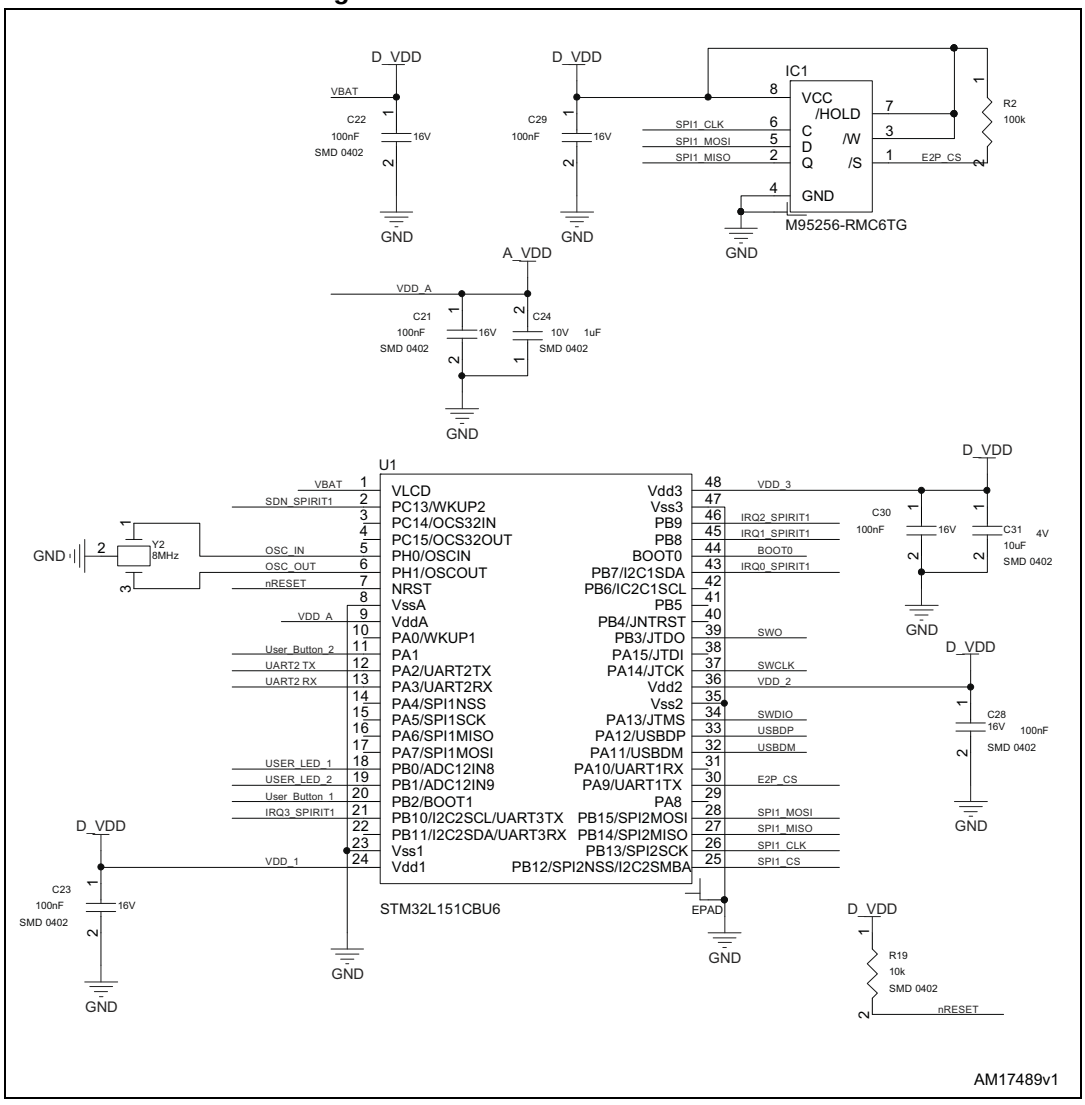

Figure 3. SWD circuit schematic

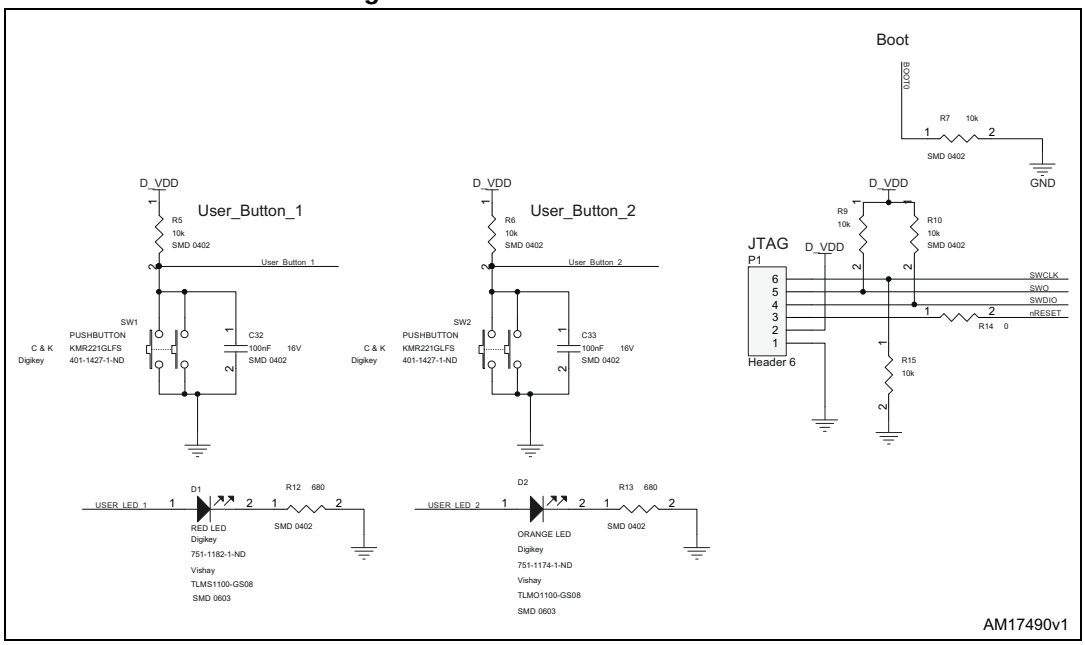

Figure 4. USB circuit schematic

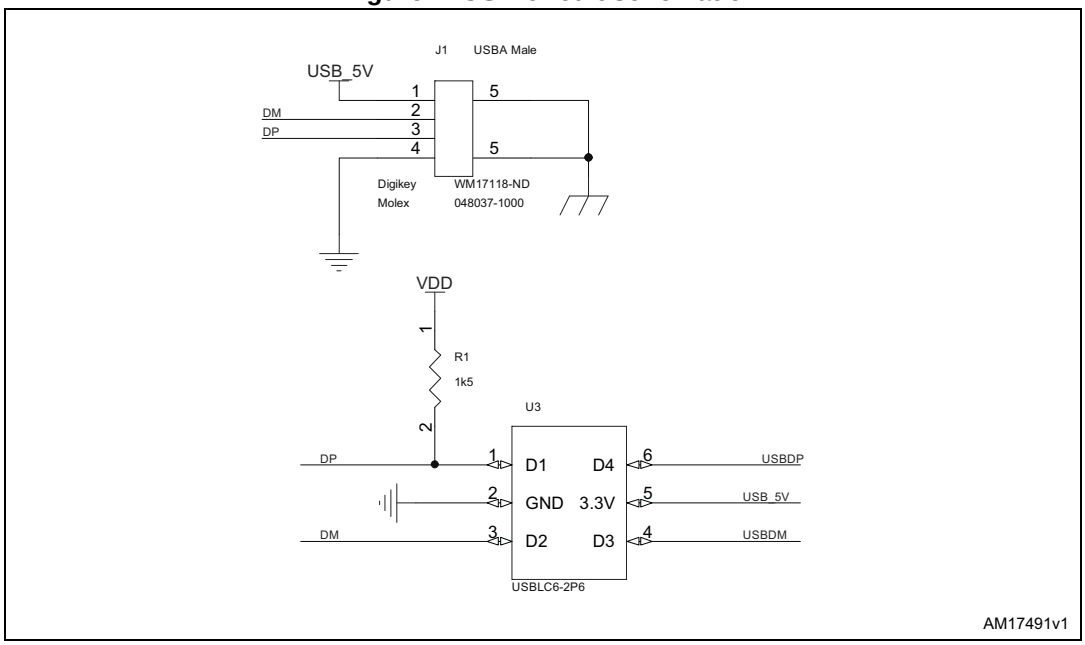

Figure 5. Power management circuit schematic

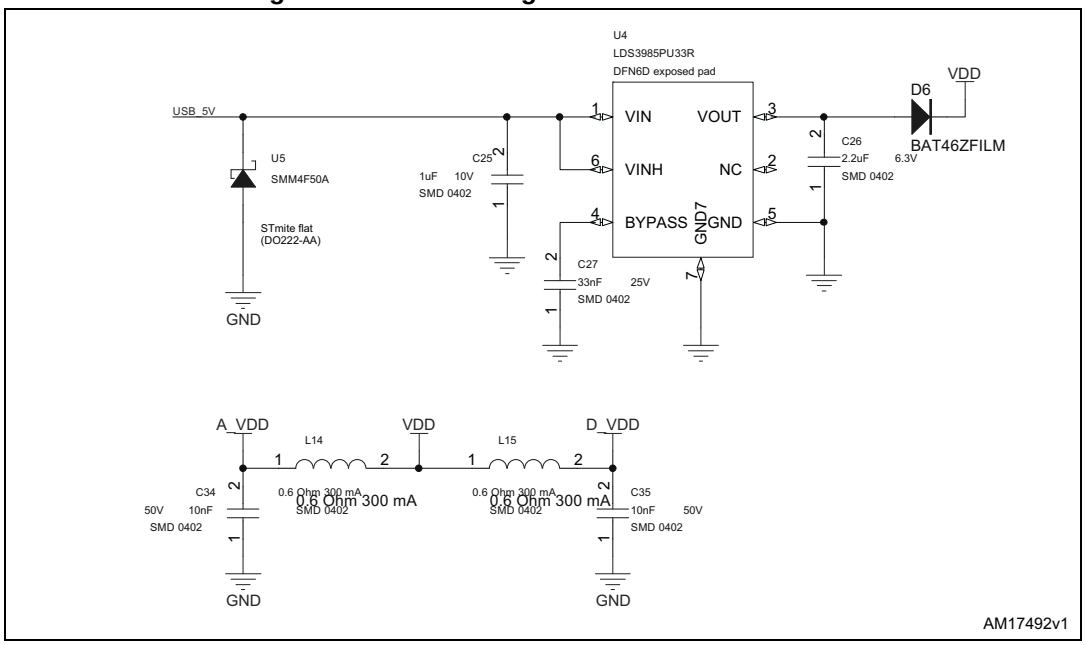

2 Revision history

Table 1. Document revision history

Date	Revision	Changes
28-Jun-2013	1	Initial release.

Please Read Carefully:

Information in this document is provided solely in connection with ST products. STMicroelectronics NV and its subsidiaries (“ST”) reserve the right to make changes, corrections, modifications or improvements, to this document, and the products and services described herein at any time, without notice.

All ST products are sold pursuant to ST’s terms and conditions of sale.

Purchasers are solely responsible for the choice, selection and use of the ST products and services described herein, and ST assumes no liability whatsoever relating to the choice, selection or use of the ST products and services described herein.

No license, express or implied, by estoppel or otherwise, to any intellectual property rights is granted under this document. If any part of this document refers to any third party products or services it shall not be deemed a license grant by ST for the use of such third party products or services, or any intellectual property contained therein or considered as a warranty covering the use in any manner whatsoever of such third party products or services or any intellectual property contained therein.

UNLESS OTHERWISE SET FORTH IN ST’S TERMS AND CONDITIONS OF SALE ST DISCLAIMS ANY EXPRESS OR IMPLIED WARRANTY WITH RESPECT TO THE USE AND/OR SALE OF ST PRODUCTS INCLUDING WITHOUT LIMITATION IMPLIED WARRANTIES OF MERCHANTABILITY, FITNESS FOR A PARTICULAR PURPOSE (AND THEIR EQUIVALENTS UNDER THE LAWS OF ANY JURISDICTION), OR INFRINGEMENT OF ANY PATENT, COPYRIGHT OR OTHER INTELLECTUAL PROPERTY RIGHT.

ST PRODUCTS ARE NOT AUTHORIZED FOR USE IN WEAPONS. NOR ARE ST PRODUCTS DESIGNED OR AUTHORIZED FOR USE IN: (A) SAFETY CRITICAL APPLICATIONS SUCH AS LIFE SUPPORTING, ACTIVE IMPLANTED DEVICES OR SYSTEMS WITH PRODUCT FUNCTIONAL SAFETY REQUIREMENTS; (B) AERONAUTIC APPLICATIONS; (C) AUTOMOTIVE APPLICATIONS OR ENVIRONMENTS, AND/OR (D) AEROSPACE APPLICATIONS OR ENVIRONMENTS. WHERE ST PRODUCTS ARE NOT DESIGNED FOR SUCH USE, THE PURCHASER SHALL USE PRODUCTS AT PURCHASER’S SOLE RISK, EVEN IF ST HAS BEEN INFORMED IN WRITING OF SUCH USAGE, UNLESS A PRODUCT IS EXPRESSLY DESIGNATED BY ST AS BEING INTENDED FOR “AUTOMOTIVE, AUTOMOTIVE SAFETY OR MEDICAL” INDUSTRY DOMAINS ACCORDING TO ST PRODUCT DESIGN SPECIFICATIONS. PRODUCTS FORMALLY ESCC, QML OR JAN QUALIFIED ARE DEEMED SUITABLE FOR USE IN AEROSPACE BY THE CORRESPONDING GOVERNMENTAL AGENCY.

Resale of ST products with provisions different from the statements and/or technical features set forth in this document shall immediately void any warranty granted by ST for the ST product or service described herein and shall not create or extend in any manner whatsoever, any liability of ST.

ST and the ST logo are trademarks or registered trademarks of ST in various countries.
Information in this document supersedes and replaces all information previously supplied.
The ST logo is a registered trademark of STMicroelectronics. All other names are the property of their respective owners.

© 2013 STMicroelectronics - All rights reserved

STMicroelectronics group of companies

Australia - Belgium - Brazil - Canada - China - Czech Republic - Finland - France - Germany - Hong Kong - India - Israel - Italy - Japan - Malaysia - Malta - Morocco - Philippines - Singapore - Spain - Sweden - Switzerland - United Kingdom - United States of America

www.st.com