STEVAL-IDZ301V1
STEVAL-IDZ302V1

Demonstration board for the SPZB32W1 series of IEEE 802.15.4 ZigBee® radio communication modules

Data brief

Features

- Integrated RF module belonging to the SPZB32W1 series of IEEE 802.15.4 ZigBee® modules
- 20-pin JTAG connector for programming and debugging purposes
- Hardware support for application development:
  - Temperature sensor
  - Circuitry for measuring the battery voltage
  - Two configurable push buttons
  - Two configurable LEDs
- Mini-USB connector and USB-RS-232 bridge
- Reset push button allows DC power source selection between the external power supply or external USB supply
- LED power indicator
- Jumper for boot activation
- Jumpers for serial communication setup (RS232 or mini-USB)
- 24-pin, double-row header for access to the remaining STM32W GPIO signals and interfaces
- The kit contains a software library including utilities and application samples

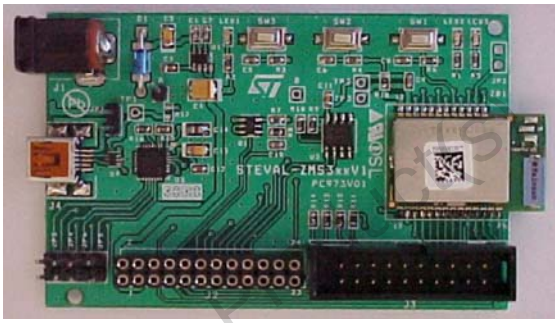

STEVAL-IDZ30xV1

Description

The STEVAL-IDZ30xV1 is a demonstration board of the SPZB32W1 series of IEEE 802.15.4 ZigBee® RF modules based on the STM32W108CU6 microcontroller that integrates a 32-bit ARM® Cortex™ - M3 microprocessor and a 2.4 GHz, IEEE 802.15.4 radio.

The STEVAL-IDZ30xV1 kit allows testing the performance of the RF, the features of the protocol libraries defined for the microcontroller, and prototyping the target application. The kit includes a development board and a software library that can be integrated in the structure of the packages available from the ST website for ZigBee PRO, Zigbee RF4CE and simplified MAC of the STM32W108 microcontroller family.

Table 1. Device summary

Order code	Module
STEVAL-IDZ301V1	SPZB32W1A2
STEVAL-IDZ302V1	SPZB32W1C2

Obsolete Product(s) - Obsolete Parts

For further information contact your local STMicroelectronics sales office. www.st.com

1 Block diagram, schematic and main components

1.1 Block diagram

Figure 1. Steval-IDZ30xV1 HW block diagram

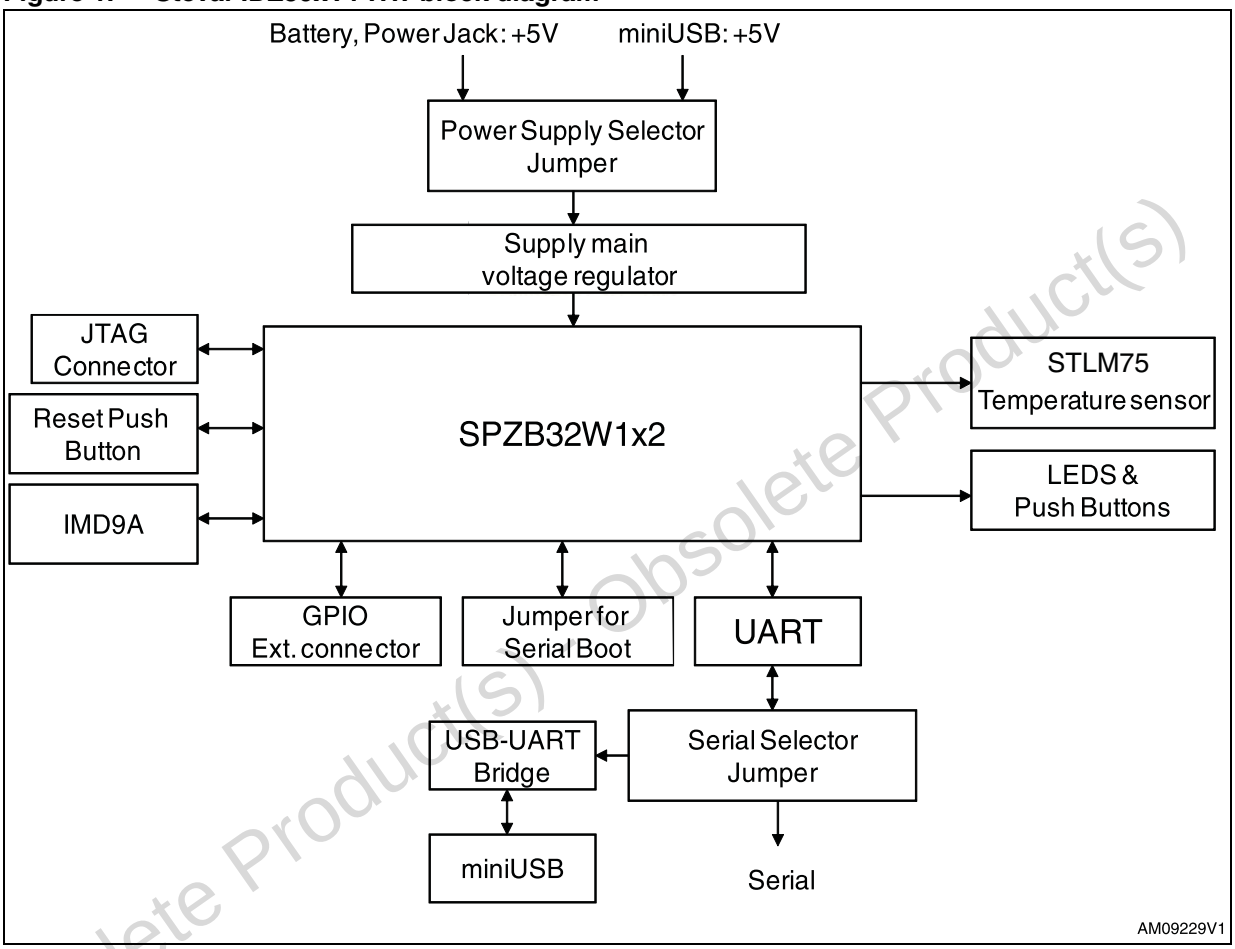

Obsolete Product(s) Obsolete Product(s)

1.2 Schematic

Figure 2. STEVAL-IDZ30xV1 schematic

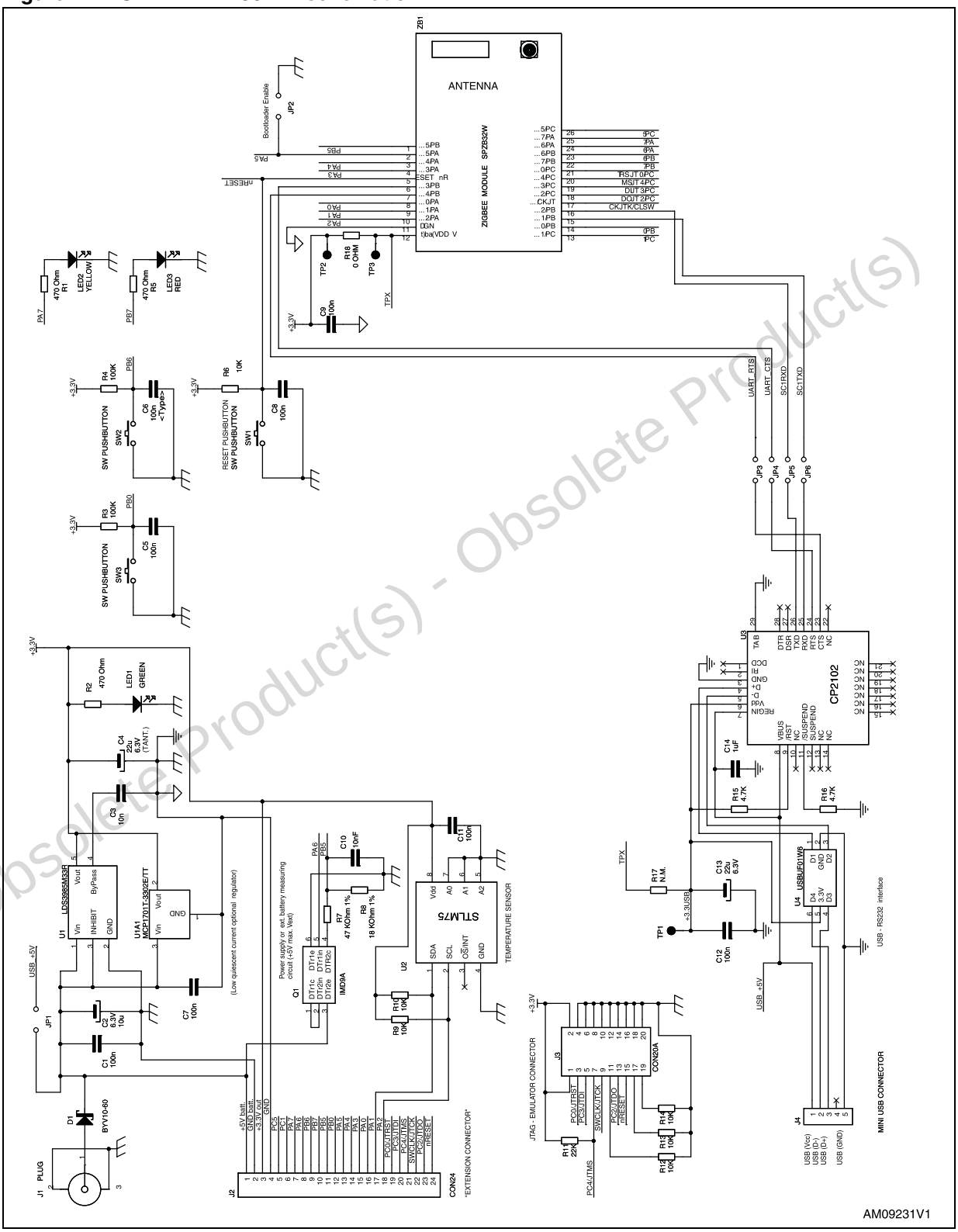

Obsolete Product(s) - Obsolete Product(s)

1.3 Main components

Figure 3. STEVAL-IDZ30xV1 - main components

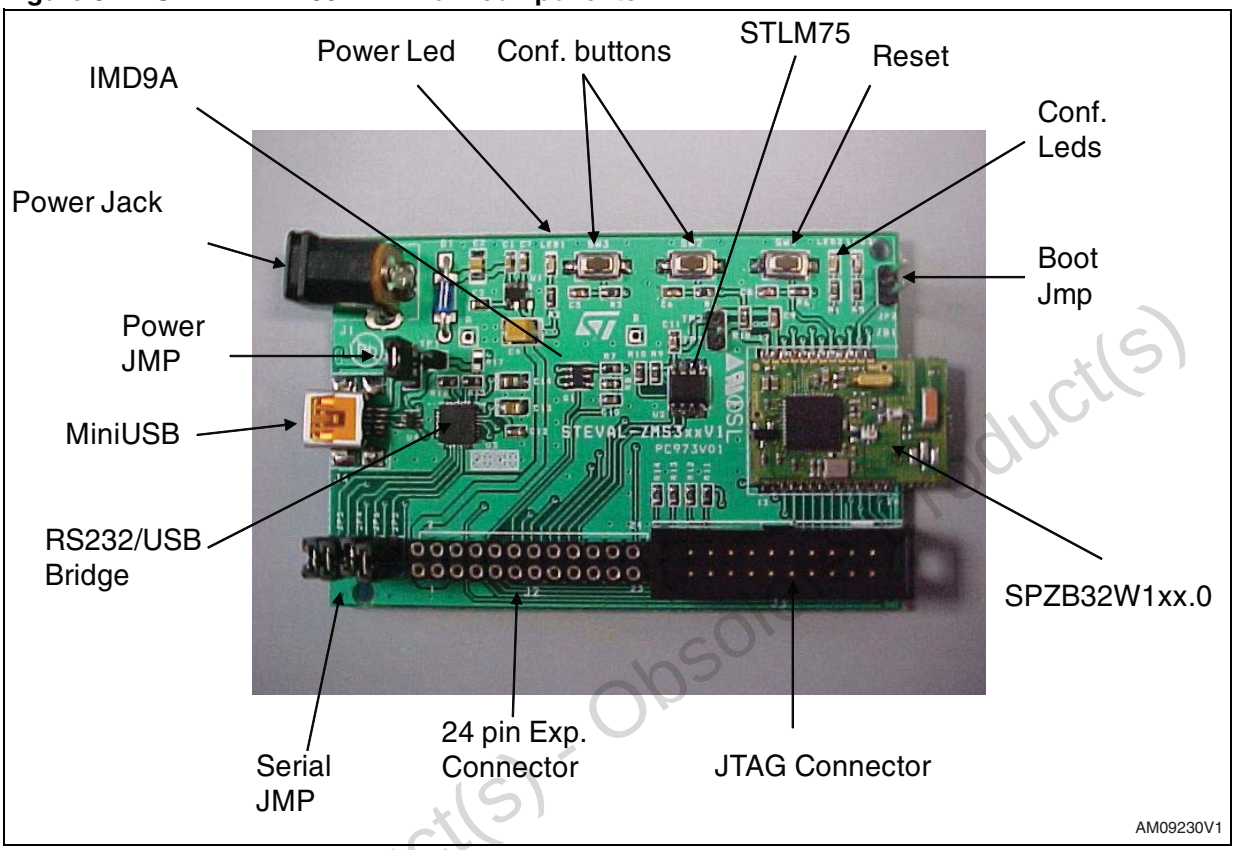

Obsolete Product(s) - Obsolete Product(s)

2 Revision history

Table 2. Document revision history

Date	Revision	Changes
23-Sep-2011	1	Initial release.

Obsolete Product(s) - Obsolete Product(s)

Obsolete Product(s) - Obsolete Product(s)

Please Read Carefully:

Information in this document is provided solely in connection with ST products. STMicroelectronics NV and its subsidiaries (“ST”) reserve the right to make changes, corrections, modifications or improvements, to this document, and the products and services described herein at any time, without notice.

All ST products are sold pursuant to ST’s terms and conditions of sale.

Purchasers are solely responsible for the choice, selection and use of the ST products and services described herein, and ST assumes no liability whatsoever relating to the choice, selection or use of the ST products and services described herein.

No license, express or implied, by estoppel or otherwise, to any intellectual property rights is granted under this document. If any part of this document refers to any third party products or services it shall not be deemed a license grant by ST for the use of such third party products or services, or any intellectual property contained therein or considered as a warranty covering the use in any manner whatsoever of such third party products or services or any intellectual property contained therein.

UNLESS OTHERWISE SET FORTH IN ST’S TERMS AND CONDITIONS OF SALE ST DISCLAIMS ANY EXPRESS OR IMPLIED WARRANTY WITH RESPECT TO THE USE AND/OR SALE OF ST PRODUCTS INCLUDING WITHOUT LIMITATION IMPLIED WARRANTIES OF MERCHANTABILITY, FITNESS FOR A PARTICULAR PURPOSE (AND THEIR EQUIVALENTS UNDER THE LAWS OF ANY JURISDICTION), OR INFRINGEMENT OF ANY PATENT, COPYRIGHT OR OTHER INTELLECTUAL PROPERTY RIGHT.

UNLESS EXPRESSLY APPROVED IN WRITING BY TWO AUTHORIZED ST REPRESENTATIVES, ST PRODUCTS ARE NOT RECOMMENDED, AUTHORIZED OR WARRANTED FOR USE IN MILITARY, AIR CRAFT, SPACE, LIFE SAVING, OR LIFE SUSTAINING APPLICATIONS, NOR IN PRODUCTS OR SYSTEMS WHERE FAILURE OR MALFUNCTION MAY RESULT IN PERSONAL INJURY, DEATH, OR SEVERE PROPERTY OR ENVIRONMENTAL DAMAGE. ST PRODUCTS WHICH ARE NOT SPECIFIED AS "AUTOMOTIVE GRADE" MAY ONLY BE USED IN AUTOMOTIVE APPLICATIONS AT USER’S OWN RISK.

Resale of ST products with provisions different from the statements and/or technical features set forth in this document shall immediately void any warranty granted by ST for the ST product or service described herein and shall not create or extend in any manner whatsoever, any liability of ST.

ST and the ST logo are trademarks or registered trademarks of ST in various countries.

Information in this document supersedes and replaces all information previously supplied.

The ST logo is a registered trademark of STMicroelectronics. All other names are the property of their respective owners.

© 2011 STMicroelectronics - All rights reserved

STMicroelectronics group of companies

Australia - Belgium - Brazil - Canada - China - Czech Republic - Finland - France - Germany - Hong Kong - India - Israel - Italy - Japan - Malaysia - Malta - Morocco - Philippines - Singapore - Spain - Sweden - Switzerland - United Kingdom - United States of America

www.st.com