STEVAL-ILL049V12

LED driver based on the LED6001 + 9-LED board with NTC sensor

Data brief

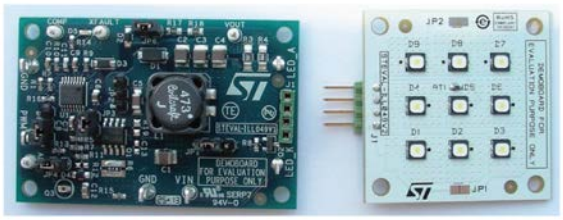

Features

- Wide DC input voltage: 6 V-24 V
- Single channel, 350 mA constant-current output with PWM brightness control
- Up to 10 high-brightness white LEDs (40 V OVP threshold)
- Selectable boost or SEPIC converter topology
- Up to 92% efficiency (boost converter)
- Onboard photo-transistor for ambient light switch function
- LED temperature protection through analog dimming control
- RoHS compliant

Description

The purpose of this product evaluation board is to provide an application example of a compact LED driver using the new LED6001 chip from STMicroelectronics. The board is equipped with a single-channel, constant-current LED driver operating with both boost and SEPIC topologies.The brightness of the LED string connected to its output can be controlled through a PWM signal (0%-100% dimming) or a control voltage (10:1 analog dimming).Open LED, feedback disconnection, LED overcurrent and output-to-ground short-circuit (SEPIC only) faults are detected and managed.The board has been designed to provide a solution example for applications involving several LEDs arranged is a single string (e.g. off-grid street lighting, advertisement panels, signs, gaming, etc.).

For further information contact your local STMicroelectronics sales office

www.st.com

1 Schematic diagram

Figure 1: Circuit schematic

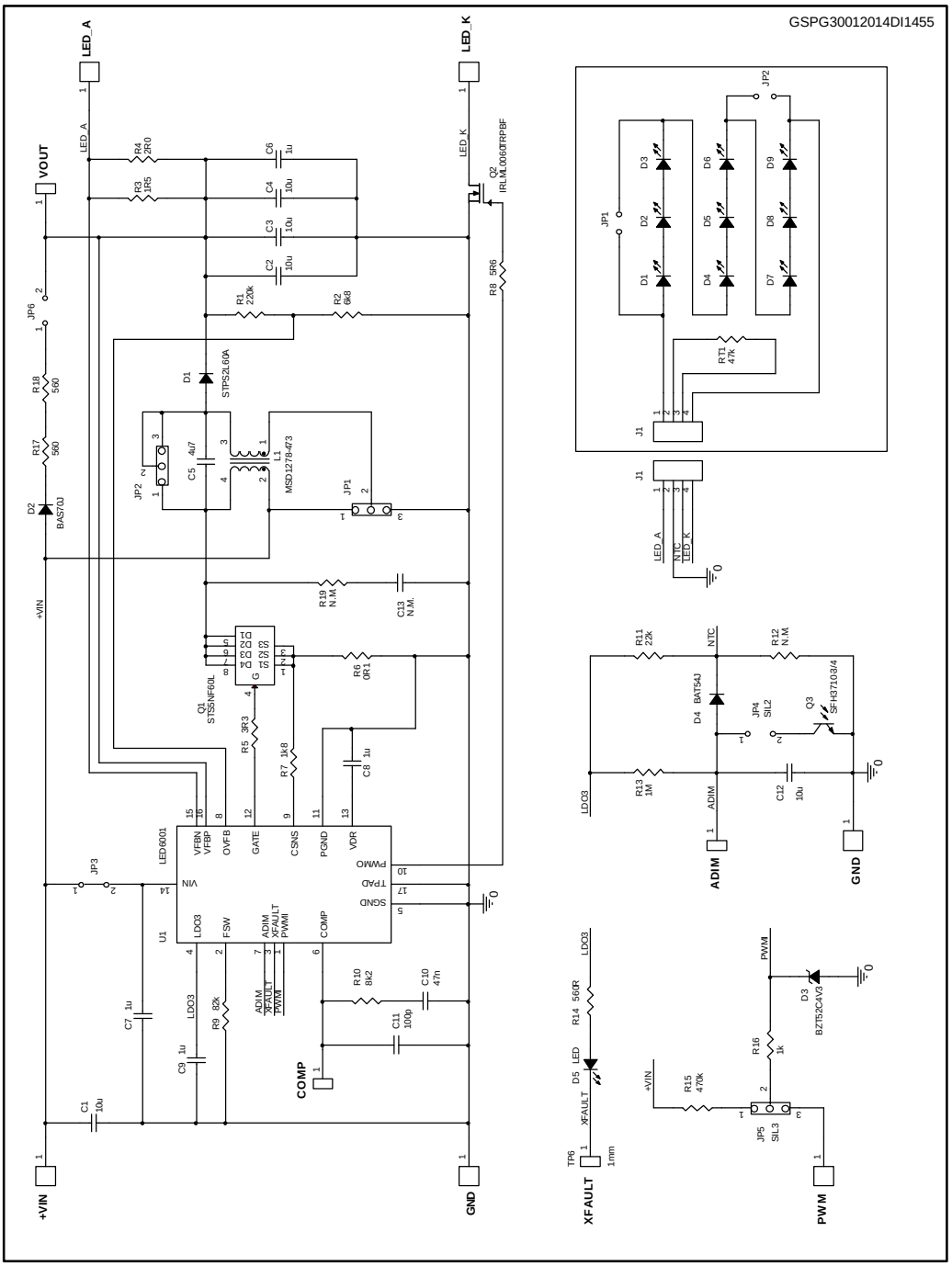

2 Revision history

Table 1: Document revision history

Data	Revision	Changes
29-Jul-2014	1	Initial release

IMPORTANT NOTICE – PLEASE READ CAREFULLY

STMicroelectronics NV and its subsidiaries (“ST”) reserve the right to make changes, corrections, enhancements, modifications, and improvements to ST products and/or to this document at any time without notice. Purchasers should obtain the latest relevant information on ST products before placing orders. ST products are sold pursuant to ST’s terms and conditions of sale in place at the time of order acknowledgement.

Purchasers are solely responsible for the choice, selection, and use of ST products and ST assumes no liability for application assistance or the design of Purchasers’ products.

No license, express or implied, to any intellectual property right is granted by ST herein.

Resale of ST products with provisions different from the information set forth herein shall void any warranty granted by ST for such product.

ST and the ST logo are trademarks of ST. All other product or service names are the property of their respective owners.

Information in this document supersedes and replaces information previously supplied in any prior versions of this document.

© 2014 STMicroelectronics – All rights reserved