STEVAL-ISB033V1

Evaluation board for STBCFG01 single-cell Li+ battery charger with OTG boost, voltage mode fuel gauge and 200 mA LDO

Data brief

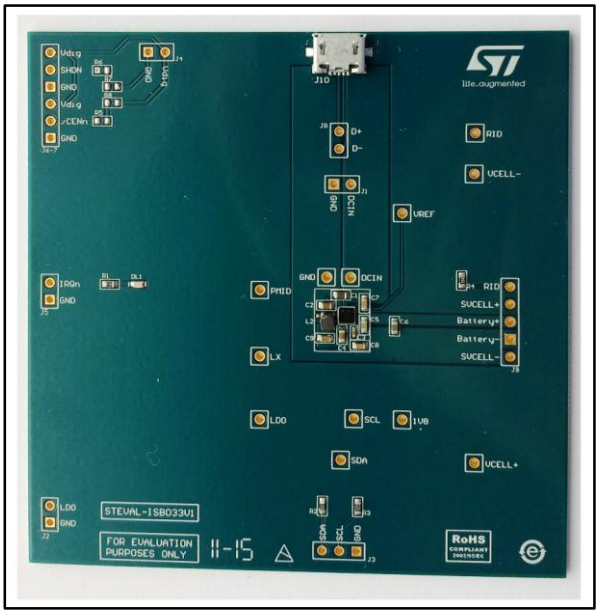

Features

- High-efficiency switching battery charger
  - 2 MHz or 3 MHz switching frequency
  - 1.2 A max. charging current
  - 20 V tolerant input with OVP
  - Programmable input current limitation and dynamic input current limit
  - Battery overvoltage protection
  - Auto-recharge
  - Integrated current sensing resistor
  - USB compatible
- Voltage mode fuel gauge
  - External sensing resistor not needed
  - Battery swap detection through ID resistor
  - Low battery voltage and low SOC programmable alarms
- 50 mA LDO for system boot in dead battery condition
- USB OTG VBUS generation (500 mA)
  - USB overvoltage protection
  - Programmable battery overcurrent protection
- Automatic 60 mA input pre-bias
- I²C compatible control interface
- Interrupt output pin
- RoHS compliant

Description

The STEVAL-ISB033V1 is an evaluation board to test the first-of-its-kind STBCFG01 switch mode battery charger for single cell Li-Ion batteries, which integrates a highly accurate voltage mode fuel gauge to monitor a battery's state of charge. The device also provides a 5 V output to supply USB OTG (on-the-go) bus-powered devices in addition to an LDO linear voltage regulator to support system boot in dead battery conditions.

The STBCFG01 uses accurate measurements of the battery voltage which allows the estimation of the battery's state-of-charge (SOC) without a current-sensing resistor. The switching charger works together with the fuel gauge to simplify monitoring features and to save current consumption when the device is not charging. The battery charger features a smart input current limit; the maximum input current can be selected through the I²C interface, and if the input voltage drops below a programmable threshold, even if the selected maximum current limit current has not been reached yet the dynamic input current limit function is activated, preventing the input current from increasing further. The dynamic input current limit function can be disabled, if necessary. An automatic input pre-bias load makes the device suitable for applications using voltage sources requiring a minimum external load for correct regulation.

For further information contact your local STMicroelectronics sales office

www.st.com

1 Schematic diagram

Figure 1: STEVAL-ISB033V1 circuit schematic

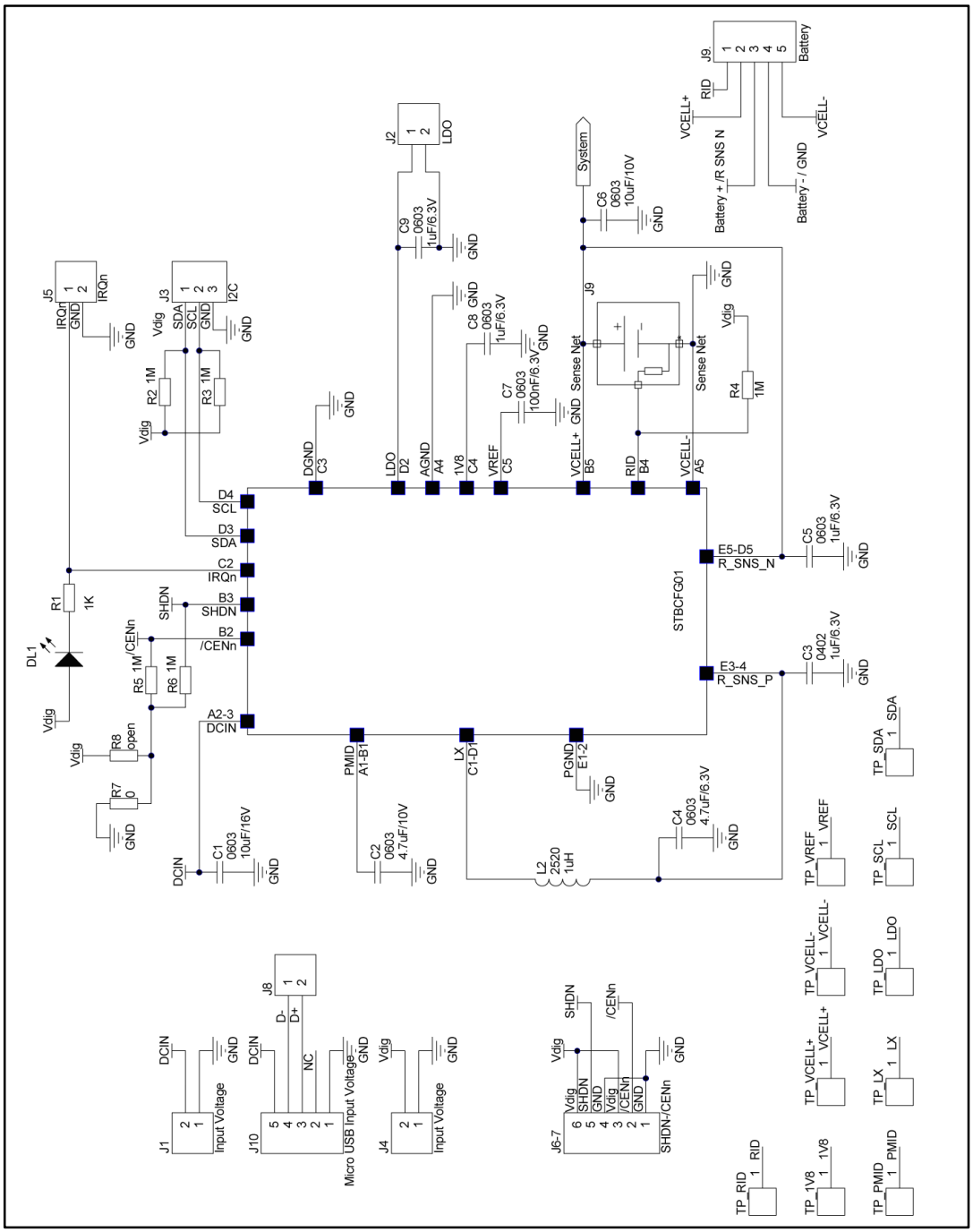

2 Revision history

Table 1: Document revision history

Date	Version	Changes
17-Apr-2015	1	Initial release.

IMPORTANT NOTICE – PLEASE READ CAREFULLY

STMicroelectronics NV and its subsidiaries (“ST”) reserve the right to make changes, corrections, enhancements, modifications, and improvements to ST products and/or to this document at any time without notice. Purchasers should obtain the latest relevant information on ST products before placing orders. ST products are sold pursuant to ST’s terms and conditions of sale in place at the time of order acknowledgement.

Purchasers are solely responsible for the choice, selection, and use of ST products and ST assumes no liability for application assistance or the design of Purchasers’ products.

No license, express or implied, to any intellectual property right is granted by ST herein.

Resale of ST products with provisions different from the information set forth herein shall void any warranty granted by ST for such product.

ST and the ST logo are trademarks of ST. All other product or service names are the property of their respective owners.

Information in this document supersedes and replaces information previously supplied in any prior versions of this document.

© 2015 STMicroelectronics – All rights reserved