STM32F051x4 STM32F051x6 STM32F051x8

ARM®-based 32-bit MCU, 16 to 64 KB Flash, 11 timers, ADC, DAC and communication interfaces, 2.0-3.6 V

Datasheet - production data

Features

- Core: ARM® 32-bit Cortex®-M0 CPU, frequency up to 48 MHz
- Memories
  - 16 to 64 Kbytes of Flash memory
  - 8 Kbytes of SRAM with HW parity checking
- CRC calculation unit
- Reset and power management
  - Digital and I/O supply: V_{DD} = 2.0 V to 3.6 V
  - Analog supply: V_{DDA} = from V_{DD} to 3.6 V
  - Power-on/Power down reset (POR/PDR)
  - Programmable voltage detector (PVD)
  - Low power modes: Sleep, Stop, Standby
  - V_{BAT} supply for RTC and backup registers
- Clock management
  - 4 to 32 MHz crystal oscillator
  - 32 kHz oscillator for RTC with calibration
  - Internal 8 MHz RC with x6 PLL option
  - Internal 40 kHz RC oscillator
- Up to 55 fast I/Os
  - All mappable on external interrupt vectors
  - Up to 36 I/Os with 5 V tolerant capability
- 5-channel DMA controller
- One 12-bit, 1.0 µs ADC (up to 16 channels)
  - Conversion range: 0 to 3.6 V
  - Separate analog supply from 2.4 up to 3.6
- One 12-bit DAC channel
- Two fast low-power analog comparators with programmable input and output
- Up to 18 capacitive sensing channels supporting touchkey, linear and rotary touch sensors
- Up to 11 timers
  - One 16-bit 7-channel advanced-control timer for 6 channels PWM output, with deadtime generation and emergency stop
  - One 32-bit and one 16-bit timer, with up to 4 IC/OC, usable for IR control decoding
  - One 16-bit timer, with 2 IC/OC, 1 OCN, deadtime generation and emergency stop
  - Two 16-bit timers, each with IC/OC and OCN, deadtime generation, emergency stop and modulator gate for IR control
  - One 16-bit timer with 1 IC/OC
  - Independent and system watchdog timers
  - SysTick timer: 24-bit downcounter
  - One 16-bit basic timer to drive the DAC
- Calendar RTC with alarm and periodic wakeup from Stop/Standby
- Communication interfaces
  - Up to two I^2C interfaces, one supporting Fast Mode Plus (1 Mbit/s) with 20 mA current sink, SMBus/PMBus and wakeup from Stop mode
  - Up to two USARTs supporting master synchronous SPI and modem control, one with ISO7816 interface, LIN, IrDA capability, auto baud rate detection and wakeup feature
  - Up to two SPIs (18 Mbit/s) with 4 to 16 programmable bit frame, one with I^2S interface multiplexed
- HDMI CEC interface, wakeup on header reception
- Serial wire debug (SWD)
- 96-bit unique ID
- All packages ECOPACK®2

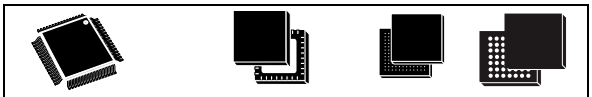

LQFP64 10x10 mm
LQFP48 7x7 mm
LQFP32 7x7 mm

UFQFPN48 7x7 mm
UFQFPN32 5x5 mm

UFBGA64 5x5 mm

WLCSP36 2.6x2.7 mm

Table 1. Device summary

Reference	Part number
STM32F051xx	STM32F051C4, STM32F051K4, STM32F051R4 STM32F051C6, STM32F051K6, STM32F051R6 STM32F051C8, STM32F051K8, STM32F051R8, STM32F051T8

This is information on a product in full production. www.st.com

Contents

1 Introduction 9

2 Description 10

3 Functional overview 13

3.1 ARM®-Cortex®-M0 core 13

3.2 Memories 13

3.3 Boot modes 13

3.4 Cyclic redundancy check calculation unit (CRC) 14

3.5 Power management 14

3.5.1 Power supply schemes 14

3.5.2 Power supply supervisors 14

3.5.3 Voltage regulator 14

3.5.4 Low-power modes 15

3.6 Clocks and startup 15

3.7 General-purpose inputs/outputs (GPIOs) 16

3.8 Direct memory access controller (DMA) 17

3.9 Interrupts and events 17

3.9.1 Nested vectored interrupt controller (NVIC) 17

3.9.2 Extended interrupt/event controller (EXTI) 17

3.10 Analog-to-digital converter (ADC) 17

3.10.1 Temperature sensor 18

3.10.2 Internal voltage reference (V_{REFINT}) 18

3.10.3 V_{BAT} battery voltage monitoring 19

3.11 Digital-to-analog converter (DAC) 19

3.12 Comparators (COMP) 19

3.13 Touch sensing controller (TSC) 19

3.14 Timers and watchdogs 21

3.14.1 Advanced-control timer (TIM1) 21

3.14.2 General-purpose timers (TIM2, 3, 14, 15, 16, 17) 22

3.14.3 Basic timer TIM6 22

3.14.4 Independent watchdog (IWDG) 22

3.14.5 System window watchdog (WWDG) 23

3.14.6 SysTick timer . . . 23
3.15 Real-time clock (RTC) and backup registers . . . 23
3.16 Inter-integrated circuit interface (I^2C) . . . 24
3.17 Universal synchronous/asynchronous receiver/transmitter (USART) . . . 25
3.18 Serial peripheral interface (SPI) / Inter-integrated sound interface (I^2S) . 26
3.19 High-definition multimedia interface (HDMI) - consumer electronics control (CEC) . . . 26
3.20 Serial wire debug port (SW-DP) . . . 26

4 Pinouts and pin descriptions . . . 27

5 Memory mapping . . . 39

6 Electrical characteristics . . . 42
6.1 Parameter conditions . . . 42
6.1.1 Minimum and maximum values . . . 42
6.1.2 Typical values . . . 42
6.1.3 Typical curves . . . 42
6.1.4 Loading capacitor . . . 42
6.1.5 Pin input voltage . . . 42
6.1.6 Power supply scheme . . . 43
6.1.7 Current consumption measurement . . . 44
6.2 Absolute maximum ratings . . . 45
6.3 Operating conditions . . . 47
6.3.1 General operating conditions . . . 47
6.3.2 Operating conditions at power-up / power-down . . . 47
6.3.3 Embedded reset and power control block characteristics . . . 48
6.3.4 Embedded reference voltage . . . 49
6.3.5 Supply current characteristics . . . 49
6.3.6 Wakeup time from low-power mode . . . 59
6.3.7 External clock source characteristics . . . 59
6.3.8 Internal clock source characteristics . . . 63
6.3.9 PLL characteristics . . . 66
6.3.10 Memory characteristics . . . 66
6.3.11 EMC characteristics . . . 67
6.3.12 Electrical sensitivity characteristics . . . 68
6.3.13 I/O current injection characteristics . . . 69

6.3.14 I/O port characteristics 70
6.3.15 NRST pin characteristics 75
6.3.16 12-bit ADC characteristics 76
6.3.17 DAC electrical specifications 80
6.3.18 Comparator characteristics 82
6.3.19 Temperature sensor characteristics 84
6.3.20 V_{BAT} monitoring characteristics 84
6.3.21 Timer characteristics 84
6.3.22 Communication interfaces 85

7 Package information 91
7.1 UFBGA64 package information 91
7.2 LQFP64 package information 94
7.3 LQFP48 package information 97
7.4 UFQFPN48 package information 100
7.5 WLCSP36 package information 103
7.6 LQFP32 package information 106
7.7 UFQFPN32 package information 108
7.8 Thermal characteristics 112
7.8.1 Reference document 112
7.8.2 Selecting the product temperature range 112

8 Ordering information 115

9 Revision history 116

List of tables

Table 1. Device summary . . . 1
Table 2. STM32F051xx family device features and peripheral count . . . 11
Table 3. Temperature sensor calibration values . . . 18
Table 4. Internal voltage reference calibration values . . . 18
Table 5. Capacitive sensing GPIOs available on STM32F051xx devices . . . 20
Table 6. Effective number of capacitive sensing channels on STM32F051xx . . . 20
Table 7. Timer feature comparison . . . 21
Table 8. Comparison of I^2C analog and digital filters . . . 24
Table 9. STM32F051xx I^2C implementation . . . 24
Table 10. STM32F051xx USART implementation . . . 25
Table 11. STM32F051xx SPI/I^2S implementation . . . 26
Table 12. Legend/abbreviations used in the pinout table . . . 31
Table 13. Pin definitions . . . 31
Table 14. Alternate functions selected through GPIOA_AFR registers for port A . . . 37
Table 15. Alternate functions selected through GPIOB_AFR registers for port B . . . 38
Table 16. STM32F051xx peripheral register boundary addresses . . . 40
Table 17. Voltage characteristics . . . 45
Table 18. Current characteristics . . . 46
Table 19. Thermal characteristics . . . 46
Table 20. General operating conditions . . . 47
Table 21. Operating conditions at power-up / power-down . . . 48
Table 22. Embedded reset and power control block characteristics . . . 48
Table 23. Programmable voltage detector characteristics . . . 48
Table 24. Embedded internal reference voltage . . . 49
Table 25. Typical and maximum current consumption from V_{DD} at 3.6 V . . . 50
Table 26. Typical and maximum current consumption from the V_{DDA} supply . . . 51
Table 27. Typical and maximum current consumption in Stop and Standby modes . . . 52
Table 28. Typical and maximum current consumption from the V_{BAT} supply . . . 53
Table 29. Typical current consumption, code executing from Flash memory, running from HSE 8 MHz crystal . . . 54
Table 30. Switching output I/O current consumption . . . 56
Table 31. Peripheral current consumption . . . 57
Table 32. Low-power mode wakeup timings . . . 59
Table 33. High-speed external user clock characteristics . . . 59
Table 34. Low-speed external user clock characteristics . . . 60
Table 35. HSE oscillator characteristics . . . 61
Table 36. LSE oscillator characteristics (f_{LSE} = 32.768 kHz) . . . 62
Table 37. HSI oscillator characteristics . . . 64
Table 38. HSI14 oscillator characteristics . . . 65
Table 39. LSI oscillator characteristics . . . 66
Table 40. PLL characteristics . . . 66
Table 41. Flash memory characteristics . . . 66
Table 42. Flash memory endurance and data retention . . . 67
Table 43. EMS characteristics . . . 67
Table 44. EMI characteristics . . . 68
Table 45. ESD absolute maximum ratings . . . 69
Table 46. Electrical sensitivities . . . 69
Table 47. I/O current injection susceptibility . . . 70

Table 48. I/O static characteristics . . . 70
Table 49. Output voltage characteristics . . . 73
Table 50. I/O AC characteristics . . . 74
Table 51. NRST pin characteristics . . . 75
Table 52. ADC characteristics . . . 76
Table 53. R_{AIN} max for f_{ADC} = 14 MHz . . . 77
Table 54. ADC accuracy . . . 78
Table 55. DAC characteristics . . . 80
Table 56. Comparator characteristics . . . 82
Table 57. TS characteristics . . . 84
Table 58. V_{BAT} monitoring characteristics . . . 84
Table 59. TIMx characteristics . . . 84
Table 60. IWDG min/max timeout period at 40 kHz (LSI) . . . 85
Table 61. WWDG min/max timeout value at 48 MHz (PCLK) . . . 85
Table 62. I^2C analog filter characteristics . . . 86
Table 63. SPI characteristics . . . 86
Table 64. I^2S characteristics . . . 88
Table 65. UFBGA64 package mechanical data . . . 91
Table 66. UFBGA64 recommended PCB design rules . . . 92
Table 67. LQFP64 package mechanical data . . . 94
Table 68. LQFP48 package mechanical data . . . 98
Table 69. UFQFPN48 package mechanical data . . . 101
Table 70. WLCSP36 package mechanical data . . . 103
Table 71. WLCSP36 recommended PCB design rules . . . 104
Table 72. LQFP32 package mechanical data . . . 107
Table 73. UFQFPN32 package mechanical data . . . 110
Table 74. Package thermal characteristics . . . 112
Table 75. Ordering information scheme . . . 115
Table 76. Document revision history . . . 116

List of figures

Figure 1. Block diagram . . . 12
Figure 2. Clock tree . . . 16
Figure 3. LQFP64 package pinout . . . 27
Figure 4. UFBGA64 package pinout . . . 28
Figure 5. LQFP48 package pinout . . . 28
Figure 6. UFQFPN48 package pinout . . . 29
Figure 7. WLCSP36 package pinout . . . 29
Figure 8. LQFP32 package pinout . . . 30
Figure 9. UFQFPN32 package pinout . . . 30
Figure 10. STM32F051x8 memory map . . . 39
Figure 11. Pin loading conditions . . . 42
Figure 12. Pin input voltage . . . 42
Figure 13. Power supply scheme . . . 43
Figure 14. Current consumption measurement scheme . . . 44
Figure 15. High-speed external clock source AC timing diagram . . . 60
Figure 16. Low-speed external clock source AC timing diagram . . . 60
Figure 17. Typical application with an 8 MHz crystal . . . 62
Figure 18. Typical application with a 32.768 kHz crystal . . . 63
Figure 19. HSI oscillator accuracy characterization results for soldered parts . . . 64
Figure 20. HSI14 oscillator accuracy characterization results . . . 65
Figure 21. TC and TTa I/O input characteristics . . . 72
Figure 22. Five volt tolerant (FT and FTf) I/O input characteristics . . . 72
Figure 23. I/O AC characteristics definition . . . 75
Figure 24. Recommended NRST pin protection . . . 76
Figure 25. ADC accuracy characteristics . . . 79
Figure 26. Typical connection diagram using the ADC . . . 79
Figure 27. 12-bit buffered / non-buffered DAC . . . 81
Figure 28. Maximum V_{REFINT} scaler startup time from power down . . . 83
Figure 29. SPI timing diagram - slave mode and CPHA = 0 . . . 87
Figure 30. SPI timing diagram - slave mode and CPHA = 1 . . . 87
Figure 31. SPI timing diagram - master mode . . . 88
Figure 32. I^2S slave timing diagram (Philips protocol) . . . 89
Figure 33. I^2S master timing diagram (Philips protocol) . . . 90
Figure 34. UFBGA64 package outline . . . 91
Figure 35. Recommended footprint for UFBGA64 package . . . 92
Figure 36. UFBGA64 package marking example . . . 93
Figure 37. LQFP64 package outline . . . 94
Figure 38. Recommended footprint for LQFP64 package . . . 95
Figure 39. LQFP64 package marking example . . . 96
Figure 40. LQFP48 package outline . . . 97
Figure 41. Recommended footprint for LQFP48 package . . . 98
Figure 42. LQFP48 package marking example . . . 99
Figure 43. UFQFPN48 package outline . . . 100
Figure 44. Recommended footprint for UFQFPN48 package . . . 101
Figure 45. UFQFPN48 package marking example . . . 102
Figure 46. WLCSP36 package outline . . . 103
Figure 47. Recommended pad footprint for WLCSP36 package . . . 104
Figure 48. WLCSP36 package marking example . . . 105

Figure 49. LQFP32 package outline . . . 106
Figure 50. Recommended footprint for LQFP32 package . . . 107
Figure 51. LQFP32 package marking example . . . 108
Figure 52. UFQFPN32 package outline . . . 109
Figure 53. Recommended footprint for UFQFPN32 package . . . 110
Figure 54. UFQFPN32 package marking example . . . 111
Figure 55. LQFP64 P_D max versus T_A . . . 114

1 Introduction

This datasheet provides the ordering information and mechanical device characteristics of the STM32F051xx microcontrollers.

This document should be read in conjunction with the STM32F0xxxx reference manual (RM0091). The reference manual is available from the STMicroelectronics website *www.st.com*.

For information on the ARM® Cortex®-M0 core, please refer to the Cortex®-M0 Technical Reference Manual, available from the www.arm.com website.



2 Description

The STM32F051xx microcontrollers incorporate the high-performance ARM® Cortex®-M0 32-bit RISC core operating at up to 48 MHz frequency, high-speed embedded memories (up to 64 Kbytes of Flash memory and 8 Kbytes of SRAM), and an extensive range of enhanced peripherals and I/Os. All devices offer standard communication interfaces (up to two I^2Cs, up to two SPIs, one I^2S, one HDMI CEC and up to two USARTs), one 12-bit ADC, one 12-bit DAC, six 16-bit timers, one 32-bit timer and an advanced-control PWM timer.

The STM32F051xx microcontrollers operate in the -40 to +85 °C and -40 to +105 °C temperature ranges, from a 2.0 to 3.6 V power supply. A comprehensive set of power-saving modes allows the design of low-power applications.

The STM32F051xx microcontrollers include devices in seven different packages ranging from 32 pins to 64 pins with a die form also available upon request. Depending on the device chosen, different sets of peripherals are included.

These features make the STM32F051xx microcontrollers suitable for a wide range of applications such as application control and user interfaces, hand-held equipment, A/V receivers and digital TV, PC peripherals, gaming and GPS platforms, industrial applications, PLCs, inverters, printers, scanners, alarm systems, video intercoms and HVACs.

Table 2. STM32F051xx family device features and peripheral count

Peripheral		STM32F051Kx			STM32F051T8	STM32F051Cx			STM32F051Rx		
Flash memory (Kbyte)		16	32	64	64	16	32	64	16	32	64
SRAM (Kbyte)		8									
Timers	Advanced control	1 (16-bit)									
	General purpose	5 (16-bit) 1 (32-bit)									
	Basic	1 (16-bit)									
Comm. interfaces	SPI [I^2S](1)	1 [1](2)			1 [1](2)	1 [1](2)		2 [1]	2 [1]		
	I^2C	1(3)			1(3)	1(3)		2	1(3)		2
	USART	1(4)	2		2	1(4)	2		1(4)	2	
	CEC	1									
12-bit ADC (number of channels)		1 (10 ext. + 3 int.)							1 (16 ext. + 3 int.)		
12-bit DAC (number of channels)		1 (1)									
Analog comparator		2									
GPIOs		25 (on LQFP32) 27 (on UFQFPN32)			29	39			55		
Capacitive sensing channels		13 (on LQFP32) 14 (on UFQFPN32)			14	17			18		
Max. CPU frequency		48 MHz									
Operating voltage		2.0 to 3.6 V									
Operating temperature		Ambient operating temperature: -40°C to 85°C / -40°C to 105°C Junction temperature: -40°C to 105°C / -40°C to 125°C									
Packages		LQFP32 UFQFPN32			WLCSP36	LQFP48 UFQFPN48			LQFP64 UFBGA64		

1. The SPI1 interface can be used either in SPI mode or in I^2S audio mode.
2. SPI2 is not present.
3. I2C2 is not present.
4. USART2 is not present.

Figure 1. Block diagram

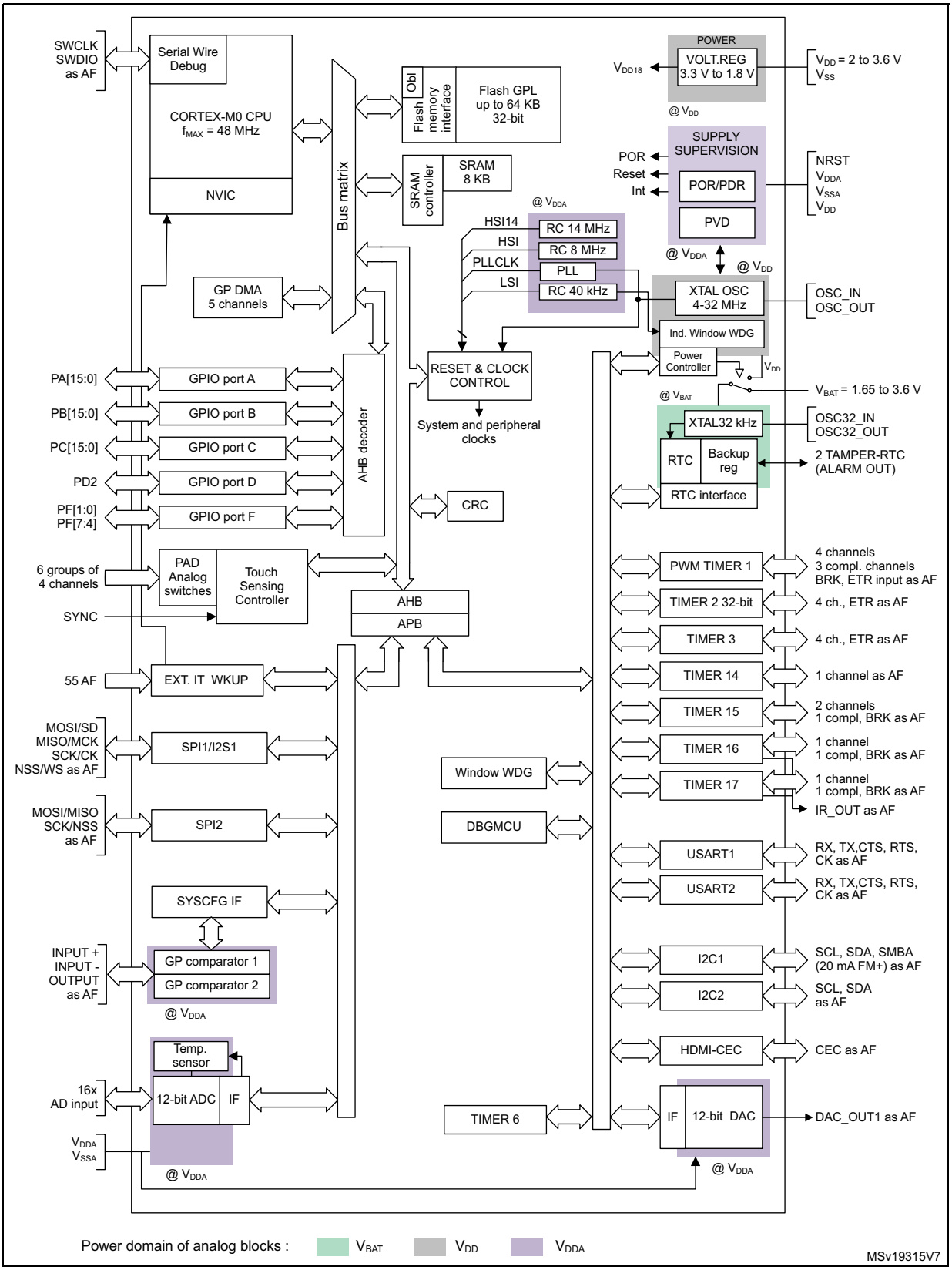

3 Functional overview

Figure 1 shows the general block diagram of the STM32F051xx devices.

3.1 ARM®-Cortex®-M0 core

The ARM® Cortex®-M0 is a generation of ARM 32-bit RISC processors for embedded systems. It has been developed to provide a low-cost platform that meets the needs of MCU implementation, with a reduced pin count and low-power consumption, while delivering outstanding computational performance and an advanced system response to interrupts.

The ARM® Cortex®-M0 processors feature exceptional code-efficiency, delivering the high performance expected from an ARM core, with memory sizes usually associated with 8- and 16-bit devices.

The STM32F051xx devices embed ARM core and are compatible with all ARM tools and software.

3.2 Memories

The device has the following features:

- 8 Kbytes of embedded SRAM accessed (read/write) at CPU clock speed with 0 wait states and featuring embedded parity checking with exception generation for fail-critical applications.
- The non-volatile memory is divided into two arrays:
  - 16 to 64 Kbytes of embedded Flash memory for programs and data
  - Option bytes

  The option bytes are used to write-protect the memory (with 4 KB granularity) and/or readout-protect the whole memory with the following options:
  - Level 0: no readout protection
  - Level 1: memory readout protection, the Flash memory cannot be read from or written to if either debug features are connected or boot in RAM is selected
  - Level 2: chip readout protection, debug features (Cortex®-M0 serial wire) and boot in RAM selection disabled

3.3 Boot modes

At startup, the boot pin and boot selector option bit are used to select one of the three boot options:

- boot from User Flash memory
- boot from System Memory
- boot from embedded SRAM

The boot loader is located in System Memory. It is used to reprogram the Flash memory by using USART on pins PA14/PA15 or PA9/PA10.

3.4 Cyclic redundancy check calculation unit (CRC)

The CRC (cyclic redundancy check) calculation unit is used to get a CRC code from a 32-bit data word and a CRC-32 (Ethernet) polynomial.

Among other applications, CRC-based techniques are used to verify data transmission or storage integrity. In the scope of the EN/IEC 60335-1 standard, they offer a means of verifying the Flash memory integrity. The CRC calculation unit helps compute a signature of the software during runtime, to be compared with a reference signature generated at link-time and stored at a given memory location.

3.5 Power management

3.5.1 Power supply schemes

- V_{DD} = V_{DDIO1} = 2.0 to 3.6 V: external power supply for I/Os (V_{DDIO1}) and the internal regulator. It is provided externally through VDD pins.
- V_{DDA} = from V_{DD} to 3.6 V: external analog power supply for ADC, DAC, Reset blocks, RCs and PLL (minimum voltage to be applied to V_{DDA} is 2.4 V when the ADC or DAC are used). It is provided externally through VDDA pin. The V_{DDA} voltage level must be always greater or equal to the V_{DD} voltage level and must be established first.
- V_{BAT} = 1.65 to 3.6 V: power supply for RTC, external clock 32 kHz oscillator and backup registers (through power switch) when V_{DD} is not present.

For more details on how to connect power pins, refer to *Figure 13: Power supply scheme*.

3.5.2 Power supply supervisors

The device has integrated power-on reset (POR) and power-down reset (PDR) circuits. They are always active, and ensure proper operation above a threshold of 2 V. The device remains in reset mode when the monitored supply voltage is below a specified threshold, $V_{POR/PDR}$, without the need for an external reset circuit.

- The POR monitors only the V_{DD} supply voltage. During the startup phase it is required that V_{DDA} should arrive first and be greater than or equal to V_{DD}.
- The PDR monitors both the V_{DD} and V_{DDA} supply voltages, however the V_{DDA} power supply supervisor can be disabled (by programming a dedicated Option bit) to reduce the power consumption if the application design ensures that V_{DDA} is higher than or equal to V_{DD}.

The device features an embedded programmable voltage detector (PVD) that monitors the V_{DD} power supply and compares it to the V_{PVD} threshold. An interrupt can be generated when V_{DD} drops below the V_{PVD} threshold and/or when V_{DD} is higher than the V_{PVD} threshold. The interrupt service routine can then generate a warning message and/or put the MCU into a safe state. The PVD is enabled by software.

3.5.3 Voltage regulator

The regulator has two operating modes and it is always enabled after reset.

- Main (MR) is used in normal operating mode (Run).
- Low power (LPR) can be used in Stop mode where the power demand is reduced.

In Standby mode, it is put in power down mode. In this mode, the regulator output is in high impedance and the kernel circuitry is powered down, inducing zero consumption (but the contents of the registers and SRAM are lost).

3.5.4 Low-power modes

The STM32F051xx microcontrollers support three low-power modes to achieve the best compromise between low power consumption, short startup time and available wakeup sources:

- **Sleep mode**

  In Sleep mode, only the CPU is stopped. All peripherals continue to operate and can wake up the CPU when an interrupt/event occurs.

- **Stop mode**

  Stop mode achieves very low power consumption while retaining the content of SRAM and registers. All clocks in the 1.8 V domain are stopped, the PLL, the HSI RC and the HSE crystal oscillators are disabled. The voltage regulator can also be put either in normal or in low power mode.

  The device can be woken up from Stop mode by any of the EXTI lines. The EXTI line source can be one of the 16 external lines, the PVD output, RTC, I2C1, USART1,, COMPx or the CEC.

  The CEC, USART1 and I2C1 peripherals can be configured to enable the HSI RC oscillator so as to get clock for processing incoming data. If this is used when the voltage regulator is put in low power mode, the regulator is first switched to normal mode before the clock is provided to the given peripheral.

- **Standby mode**

  The Standby mode is used to achieve the lowest power consumption. The internal voltage regulator is switched off so that the entire 1.8 V domain is powered off. The PLL, the HSI RC and the HSE crystal oscillators are also switched off. After entering Standby mode, SRAM and register contents are lost except for registers in the RTC domain and Standby circuitry.

  The device exits Standby mode when an external reset (NRST pin), an IWDG reset, a rising edge on the WKUP pins, or an RTC event occurs.

Note: The RTC, the IWDG, and the corresponding clock sources are not stopped by entering Stop or Standby mode.

3.6 Clocks and startup

System clock selection is performed on startup, however the internal RC 8 MHz oscillator is selected as default CPU clock on reset. An external 4-32 MHz clock can be selected, in which case it is monitored for failure. If failure is detected, the system automatically switches back to the internal RC oscillator. A software interrupt is generated if enabled. Similarly, full interrupt management of the PLL clock entry is available when necessary (for example on failure of an indirectly used external crystal, resonator or oscillator).

Several prescalers allow the application to configure the frequency of the AHB and the APB domains. The maximum frequency of the AHB and the APB domains is 48 MHz.

Figure 2. Clock tree

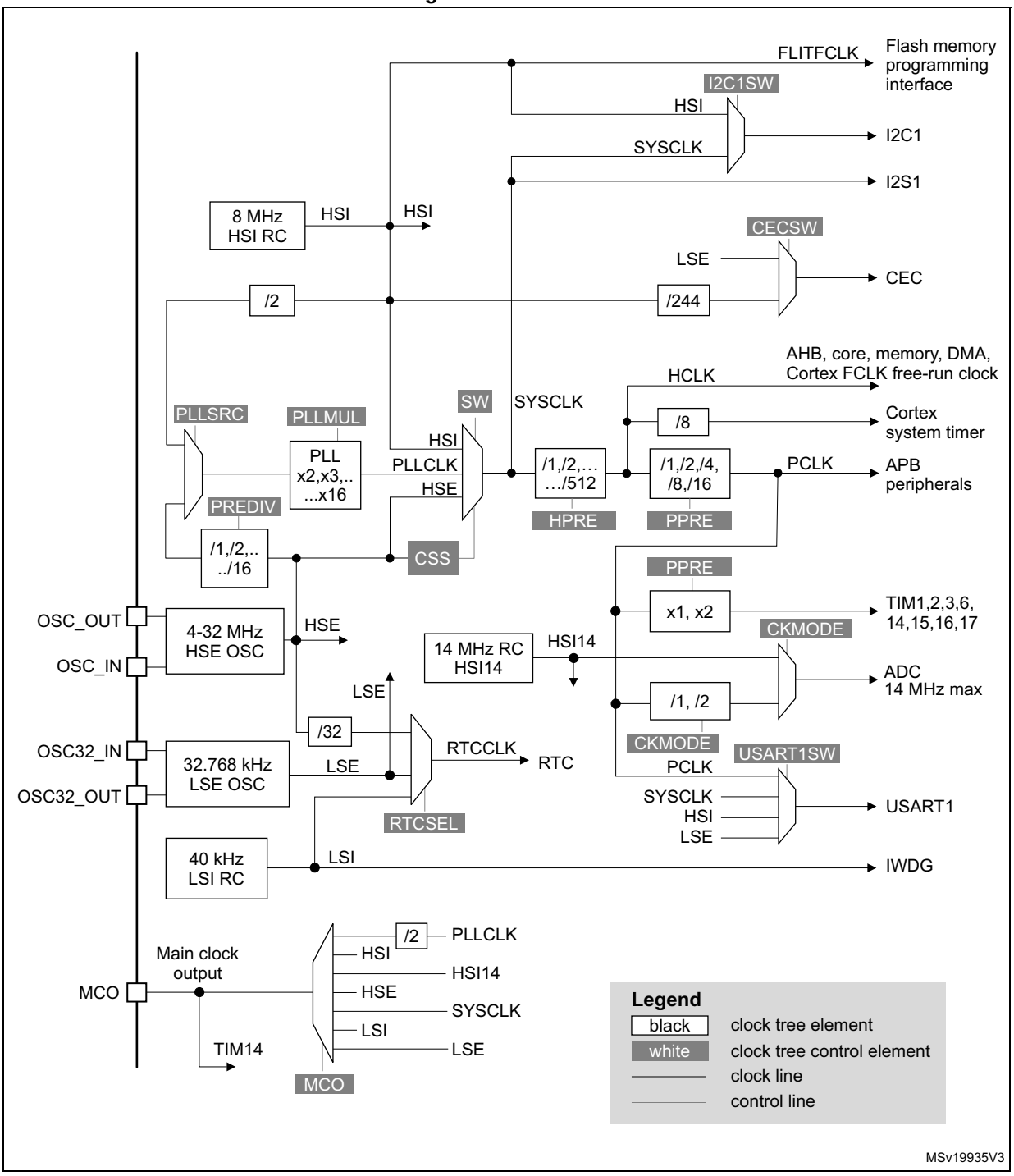

3.7 General-purpose inputs/outputs (GPIOs)

Each of the GPIO pins can be configured by software as output (push-pull or open-drain), as input (with or without pull-up or pull-down) or as peripheral alternate function. Most of the GPIO pins are shared with digital or analog alternate functions.

The I/O configuration can be locked if needed following a specific sequence in order to avoid spurious writing to the I/Os registers.

3.8 Direct memory access controller (DMA)

The 5-channel general-purpose DMAs manage memory-to-memory, peripheral-to-memory and memory-to-peripheral transfers.

The DMA supports circular buffer management, removing the need for user code intervention when the controller reaches the end of the buffer.

Each channel is connected to dedicated hardware DMA requests, with support for software trigger on each channel. Configuration is made by software and transfer sizes between source and destination are independent.

DMA can be used with the main peripherals: SPIx, I2Sx, I2Cx, USARTx, all TIMx timers (except TIM14), DAC and ADC.

3.9 Interrupts and events

3.9.1 Nested vectored interrupt controller (NVIC)

The STM32F0xx family embeds a nested vectored interrupt controller able to handle up to 32 maskable interrupt channels (not including the 16 interrupt lines of Cortex®-M0) and 4 priority levels.

- Closely coupled NVIC gives low latency interrupt processing
- Interrupt entry vector table address passed directly to the core
- Closely coupled NVIC core interface
- Allows early processing of interrupts
- Processing of late arriving higher priority interrupts
- Support for tail-chaining
- Processor state automatically saved
- Interrupt entry restored on interrupt exit with no instruction overhead

This hardware block provides flexible interrupt management features with minimal interrupt latency.

3.9.2 Extended interrupt/event controller (EXTI)

The extended interrupt/event controller consists of 24 edge detector lines used to generate interrupt/event requests and wake-up the system. Each line can be independently configured to select the trigger event (rising edge, falling edge, both) and can be masked independently. A pending register maintains the status of the interrupt requests. The EXTI can detect an external line with a pulse width shorter than the internal clock period. Up to 55 GPIOs can be connected to the 16 external interrupt lines.

3.10 Analog-to-digital converter (ADC)

The 12-bit analog-to-digital converter has up to 16 external and 3 internal (temperature

sensor, voltage reference, VBAT voltage measurement) channels and performs conversions in single-shot or scan modes. In scan mode, automatic conversion is performed on a selected group of analog inputs.

The ADC can be served by the DMA controller.

An analog watchdog feature allows very precise monitoring of the converted voltage of one, some or all selected channels. An interrupt is generated when the converted voltage is outside the programmed thresholds.

3.10.1 Temperature sensor

The temperature sensor (TS) generates a voltage V_{SENSE} that varies linearly with temperature.

The temperature sensor is internally connected to the ADC_IN16 input channel which is used to convert the sensor output voltage into a digital value.

The sensor provides good linearity but it has to be calibrated to obtain good overall accuracy of the temperature measurement. As the offset of the temperature sensor varies from chip to chip due to process variation, the uncalibrated internal temperature sensor is suitable for applications that detect temperature changes only.

To improve the accuracy of the temperature sensor measurement, each device is individually factory-calibrated by ST. The temperature sensor factory calibration data are stored by ST in the system memory area, accessible in read-only mode.

Table 3. Temperature sensor calibration values

Calibration value name	Description	Memory address
TS_CAL1	TS ADC raw data acquired at a temperature of 30 °C (± 5 °C), V_{DDA}= 3.3 V (± 10 mV)	0x1FFF F7B8 - 0x1FFF F7B9
TS_CAL2	TS ADC raw data acquired at a temperature of 110 °C (± 5 °C), V_{DDA}= 3.3 V (± 10 mV)	0x1FFF F7C2 - 0x1FFF F7C3

3.10.2 Internal voltage reference (V_{REFINT})

The internal voltage reference (V_{REFINT}) provides a stable (bandgap) voltage output for the ADC and comparators. V_{REFINT} is internally connected to the ADC_IN17 input channel. The precise voltage of V_{REFINT} is individually measured for each part by ST during production test and stored in the system memory area. It is accessible in read-only mode.

Table 4. Internal voltage reference calibration values

Calibration value name	Description	Memory address
VREFINT_CAL	Raw data acquired at a temperature of 30 °C (± 5 °C), V_{DDA}= 3.3 V (± 10 mV)	0x1FFF F7BA - 0x1FFF F7BB

3.10.3 V_{BAT} battery voltage monitoring

This embedded hardware feature allows the application to measure the V_{BAT} battery voltage using the internal ADC channel ADC_IN18. As the V_{BAT} voltage may be higher than V_{DDA}, and thus outside the ADC input range, the V_{BAT} pin is internally connected to a bridge divider by 2. As a consequence, the converted digital value is half the V_{BAT} voltage.

3.11 Digital-to-analog converter (DAC)

The 12-bit buffered DAC channels can be used to convert digital signals into analog voltage signal outputs. The chosen design structure is composed of integrated resistor strings and an amplifier in non-inverting configuration.

This digital Interface supports the following features:

- Left or right data alignment in 12-bit mode
- Synchronized update capability
- DMA capability
- External triggers for conversion

Five DAC trigger inputs are used in the device. The DAC is triggered through the timer trigger outputs and the DAC interface is generating its own DMA requests.

3.12 Comparators (COMP)

The device embeds two fast rail-to-rail low-power comparators with programmable reference voltage (internal or external), hysteresis and speed (low speed for low power) and with selectable output polarity.

The reference voltage can be one of the following:

- External I/O
- DAC output pins
- Internal reference voltage or submultiple (1/4, 1/2, 3/4).Refer to *Table 24: Embedded internal reference voltage* for the value and precision of the internal reference voltage.

Both comparators can wake up from STOP mode, generate interrupts and breaks for the timers and can be also combined into a window comparator.

3.13 Touch sensing controller (TSC)

The STM32F051xx devices provide a simple solution for adding capacitive sensing functionality to any application. These devices offer up to 18 capacitive sensing channels distributed over 6 analog I/O groups.

Capacitive sensing technology is able to detect the presence of a finger near a sensor which is protected from direct touch by a dielectric (glass, plastic...). The capacitive variation introduced by the finger (or any conductive object) is measured using a proven implementation based on a surface charge transfer acquisition principle. It consists in charging the sensor capacitance and then transferring a part of the accumulated charges into a sampling capacitor until the voltage across this capacitor has reached a specific threshold. To limit the CPU bandwidth usage, this acquisition is directly managed by the

hardware touch sensing controller and only requires few external components to operate. For operation, one capacitive sensing GPIO in each group is connected to an external capacitor and cannot be used as effective touch sensing channel.

The touch sensing controller is fully supported by the STMTouch touch sensing firmware library, which is free to use and allows touch sensing functionality to be implemented reliably in the end application.

Table 5. Capacitive sensing GPIOs available on STM32F051xx devices

Group	Capacitive sensing signal name	Pin name	Group	Capacitive sensing signal name	Pin name
1	TSC_G1_IO1	PA0	4	TSC_G4_IO1	PA9
	TSC_G1_IO2	PA1		TSC_G4_IO2	PA10
	TSC_G1_IO3	PA2		TSC_G4_IO3	PA11
	TSC_G1_IO4	PA3		TSC_G4_IO4	PA12
2	TSC_G2_IO1	PA4	5	TSC_G5_IO1	PB3
	TSC_G2_IO2	PA5		TSC_G5_IO2	PB4
	TSC_G2_IO3	PA6		TSC_G5_IO3	PB6
	TSC_G2_IO4	PA7		TSC_G5_IO4	PB7
3	TSC_G3_IO1	PC5	6	TSC_G6_IO1	PB11
	TSC_G3_IO2	PB0		TSC_G6_IO2	PB12
	TSC_G3_IO3	PB1		TSC_G6_IO3	PB13
	TSC_G3_IO4	PB2		TSC_G6_IO4	PB14

Table 6. Effective number of capacitive sensing channels on STM32F051xx

Analog I/O group	Number of capacitive sensing channels				
	STM32F051Rx	STM32F051Cx	STM32F051Tx	STM32F051KxU (UFQFPN32)	STM32F051KxT (LQFP32)
G1	3	3	3	3	3
G2	3	3	3	3	3
G3	3	2	2	2	1
G4	3	3	3	3	3
G5	3	3	3	3	3
G6	3	3	0	0	0
Number of capacitive sensing channels	18	17	14	14	13

3.14 Timers and watchdogs

The STM32F051xx devices include up to six general-purpose timers, one basic timer and an advanced control timer.

Table 7 compares the features of the different timers.

Table 7. Timer feature comparison

Timer type	Timer	Counter resolution	Counter type	Prescaler factor	DMA request generation	Capture/compare channels	Complementary outputs
Advanced control	TIM1	16-bit	Up, down, up/down	integer from 1 to 65536	Yes	4	3
General purpose	TIM2	32-bit	Up, down, up/down	integer from 1 to 65536	Yes	4	-
	TIM3	16-bit	Up, down, up/down	integer from 1 to 65536	Yes	4	-
	TIM14	16-bit	Up	integer from 1 to 65536	No	1	-
	TIM15	16-bit	Up	integer from 1 to 65536	Yes	2	1
	TIM16 TIM17	16-bit	Up	integer from 1 to 65536	Yes	1	1
Basic	TIM6	16-bit	Up	integer from 1 to 65536	Yes	-	-

3.14.1 Advanced-control timer (TIM1)

The advanced-control timer (TIM1) can be seen as a three-phase PWM multiplexed on six channels. It has complementary PWM outputs with programmable inserted dead times. It can also be seen as a complete general-purpose timer. The four independent channels can be used for:

- input capture
- output compare
- PWM generation (edge or center-aligned modes)
- one-pulse mode output

If configured as a standard 16-bit timer, it has the same features as the TIMx timer. If configured as the 16-bit PWM generator, it has full modulation capability (0-100%).

The counter can be frozen in debug mode.

Many features are shared with those of the standard timers which have the same architecture. The advanced control timer can therefore work together with the other timers via the Timer Link feature for synchronization or event chaining.

3.14.2 General-purpose timers (TIM2, 3, 14, 15, 16, 17)

There are six synchronizable general-purpose timers embedded in the STM32F051xx devices (see *Table 7* for differences). Each general-purpose timer can be used to generate PWM outputs, or as simple time base.

TIM2, TIM3

STM32F051xx devices feature two synchronizable 4-channel general-purpose timers. TIM2 is based on a 32-bit auto-reload up/downcounter and a 16-bit prescaler. TIM3 is based on a 16-bit auto-reload up/downcounter and a 16-bit prescaler. They feature 4 independent channels each for input capture/output compare, PWM or one-pulse mode output. This gives up to 12 input captures/output compares/PWMs on the largest packages.

The TIM2 and TIM3 general-purpose timers can work together or with the TIM1 advanced-control timer via the Timer Link feature for synchronization or event chaining.

TIM2 and TIM3 both have independent DMA request generation.

These timers are capable of handling quadrature (incremental) encoder signals and the digital outputs from 1 to 3 hall-effect sensors.

Their counters can be frozen in debug mode.

TIM14

This timer is based on a 16-bit auto-reload upcounter and a 16-bit prescaler.

TIM14 features one single channel for input capture/output compare, PWM or one-pulse mode output.

Its counter can be frozen in debug mode.

TIM15, TIM16 and TIM17

These timers are based on a 16-bit auto-reload upcounter and a 16-bit prescaler.

TIM15 has two independent channels, whereas TIM16 and TIM17 feature one single channel for input capture/output compare, PWM or one-pulse mode output.

The TIM15, TIM16 and TIM17 timers can work together, and TIM15 can also operate withTIM1 via the Timer Link feature for synchronization or event chaining.

TIM15 can be synchronized with TIM16 and TIM17.

TIM15, TIM16 and TIM17 have a complementary output with dead-time generation and independent DMA request generation.

Their counters can be frozen in debug mode.

3.14.3 Basic timer TIM6

This timer is mainly used for DAC trigger generation. It can also be used as a generic 16-bit time base.

3.14.4 Independent watchdog (IWDG)

The independent watchdog is based on an 8-bit prescaler and 12-bit downcounter with user-defined refresh window. It is clocked from an independent 40 kHz internal RC and as it operates independently from the main clock, it can operate in Stop and Standby modes. It

can be used either as a watchdog to reset the device when a problem occurs, or as a free running timer for application timeout management. It is hardware or software configurable through the option bytes. The counter can be frozen in debug mode.

3.14.5 System window watchdog (WWDG)

The system window watchdog is based on a 7-bit downcounter that can be set as free running. It can be used as a watchdog to reset the device when a problem occurs. It is clocked from the APB clock (PCLK). It has an early warning interrupt capability and the counter can be frozen in debug mode.

3.14.6 SysTick timer

This timer is dedicated to real-time operating systems, but could also be used as a standard down counter. It features:

- a 24-bit down counter
- autoreload capability
- maskable system interrupt generation when the counter reaches 0
- programmable clock source (HCLK or HCLK/8)

3.15 Real-time clock (RTC) and backup registers

The RTC and the five backup registers are supplied through a switch that takes power either on V_{DD} supply when present or through the V_{BAT} pin. The backup registers are five 32-bit registers used to store 20 bytes of user application data when V_{DD} power is not present. They are not reset by a system or power reset, or at wake up from Standby mode.

The RTC is an independent BCD timer/counter. Its main features are the following:

- calendar with subseconds, seconds, minutes, hours (12 or 24 format), week day, date, month, year, in BCD (binary-coded decimal) format
- automatic correction for 28, 29 (leap year), 30, and 31 day of the month
- programmable alarm with wake up from Stop and Standby mode capability
- on-the-fly correction from 1 to 32767 RTC clock pulses. This can be used to synchronize the RTC with a master clock
- digital calibration circuit with 1 ppm resolution, to compensate for quartz crystal inaccuracy
- two anti-tamper detection pins with programmable filter. The MCU can be woken up from Stop and Standby modes on tamper event detection
- timestamp feature which can be used to save the calendar content. This function can be triggered by an event on the timestamp pin, or by a tamper event. The MCU can be woken up from Stop and Standby modes on timestamp event detection
- reference clock detection: a more precise second source clock (50 or 60 Hz) can be used to enhance the calendar precision

The RTC clock sources can be:

- a 32.768 kHz external crystal
- a resonator or oscillator
- the internal low-power RC oscillator (typical frequency of 40 kHz)
- the high-speed external clock divided by 32

3.16 Inter-integrated circuit interface (I^2C)

Up to two I^2C interfaces (I2C1 and I2C2) can operate in multimaster or slave modes. Both can support Standard mode (up to 100 kbit/s) and Fast mode (up to 400 kbit/s) and, I2C1 also supports Fast Mode Plus (up to 1 Mbit/s) with 20 mA output drive.

Both support 7-bit and 10-bit addressing modes, multiple 7-bit slave addresses (two addresses, one with configurable mask). They also include programmable analog and digital noise filters.

Table 8. Comparison of I^2C analog and digital filters

Aspect	Analog filter	Digital filter
Pulse width of suppressed spikes	≥ 50 ns	Programmable length from 1 to 15 I2Cx peripheral clocks
Benefits	Available in Stop mode	–Extra filtering capability vs. standard requirements –Stable length
Drawbacks	Variations depending on temperature, voltage, process	Wakeup from Stop on address match is not available when digital filter is enabled.

In addition, I2C1 provides hardware support for SMBUS 2.0 and PMBUS 1.1: ARP capability, Host notify protocol, hardware CRC (PEC) generation/verification, timeouts verifications and ALERT protocol management. I2C1 also has a clock domain independent from the CPU clock, allowing the I2C1 to wake up the MCU from Stop mode on address match.

The I2C peripherals can be served by the DMA controller.

Refer to *Table 9* for the differences between I2C1 and I2C2.

Table 9. STM32F051xx I^2C implementation

I^2C features(1)	I2C1	I2C2
7-bit addressing mode	X	X
10-bit addressing mode	X	X
Standard mode (up to 100 kbit/s)	X	X
Fast mode (up to 400 kbit/s)	X	X
Fast Mode Plus (up to 1 Mbit/s) with 20 mA output drive I/Os	X	-
Independent clock	X	-

Table 9. STM32F051xx I²C implementation (continued)

I²C features(1)	I2C1	I2C2
SMBus	X	-
Wakeup from STOP	X	-

1. X = supported.

3.17 Universal synchronous/asynchronous receiver/transmitter (USART)

The device embeds up to two universal synchronous/asynchronous receivers/transmitters (USART1, USART2) which communicate at speeds of up to 6 Mbit/s.

They provide hardware management of the CTS, RTS and RS485 DE signals, multiprocessor communication mode, master synchronous communication and single-wire half-duplex communication mode. USART1 supports also SmartCard communication (ISO 7816), IrDA SIR ENDEC, LIN Master/Slave capability and auto baud rate feature, and has a clock domain independent of the CPU clock, allowing to wake up the MCU from Stop mode.

The USART interfaces can be served by the DMA controller.

Table 10. STM32F051xx USART implementation

USART modes/features(1)	USART1	USART2
Hardware flow control for modem	X	X
Continuous communication using DMA	X	X
Multiprocessor communication	X	X
Synchronous mode	X	X
Smartcard mode	X	-
Single-wire half-duplex communication	X	X
IrDA SIR ENDEC block	X	-
LIN mode	X	-
Dual clock domain and wakeup from Stop mode	X	-
Receiver timeout interrupt	X	-
Modbus communication	X	-
Auto baud rate detection	X	-
Driver Enable	X	X

1. X = supported.

3.18 Serial peripheral interface (SPI) / Inter-integrated sound interface (I^2S)

Up to two SPIs are able to communicate up to 18 Mbit/s in slave and master modes in full-duplex and half-duplex communication modes. The 3-bit prescaler gives 8 master mode frequencies and the frame size is configurable from 4 bits to 16 bits.

One standard I^2S interface (multiplexed with SPI1) supporting four different audio standards can operate as master or slave at half-duplex communication mode. It can be configured to transfer 16 and 24 or 32 bits with 16-bit or 32-bit data resolution and synchronized by a specific signal. Audio sampling frequency from 8 kHz up to 192 kHz can be set by an 8-bit programmable linear prescaler. When operating in master mode, it can output a clock for an external audio component at 256 times the sampling frequency.

Table 11. STM32F051xx SPI/I^2S implementation

SPI features(1)	SPI1	SPI2
Hardware CRC calculation	X	X
Rx/Tx FIFO	X	X
NSS pulse mode	X	X
I^2S mode	X	-
TI mode	X	X

1. X = supported.

3.19 High-definition multimedia interface (HDMI) - consumer electronics control (CEC)

The device embeds a HDMI-CEC controller that provides hardware support for the Consumer Electronics Control (CEC) protocol (Supplement 1 to the HDMI standard).

This protocol provides high-level control functions between all audiovisual products in an environment. It is specified to operate at low speeds with minimum processing and memory overhead. It has a clock domain independent from the CPU clock, allowing the HDMI_CEC controller to wakeup the MCU from Stop mode on data reception.

3.20 Serial wire debug port (SW-DP)

An ARM SW-DP interface is provided to allow a serial wire debugging tool to be connected to the MCU.

4 Pinouts and pin descriptions

Figure 3. LQFP64 package pinout

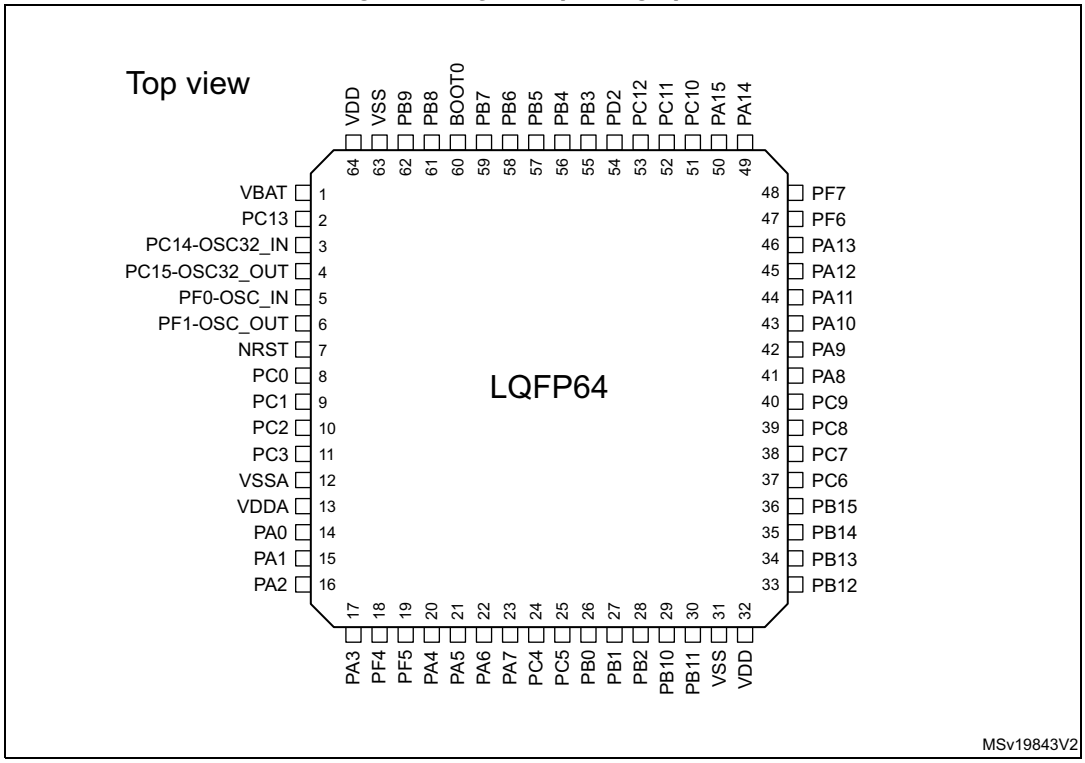

Figure 4. UFBGA64 package pinout

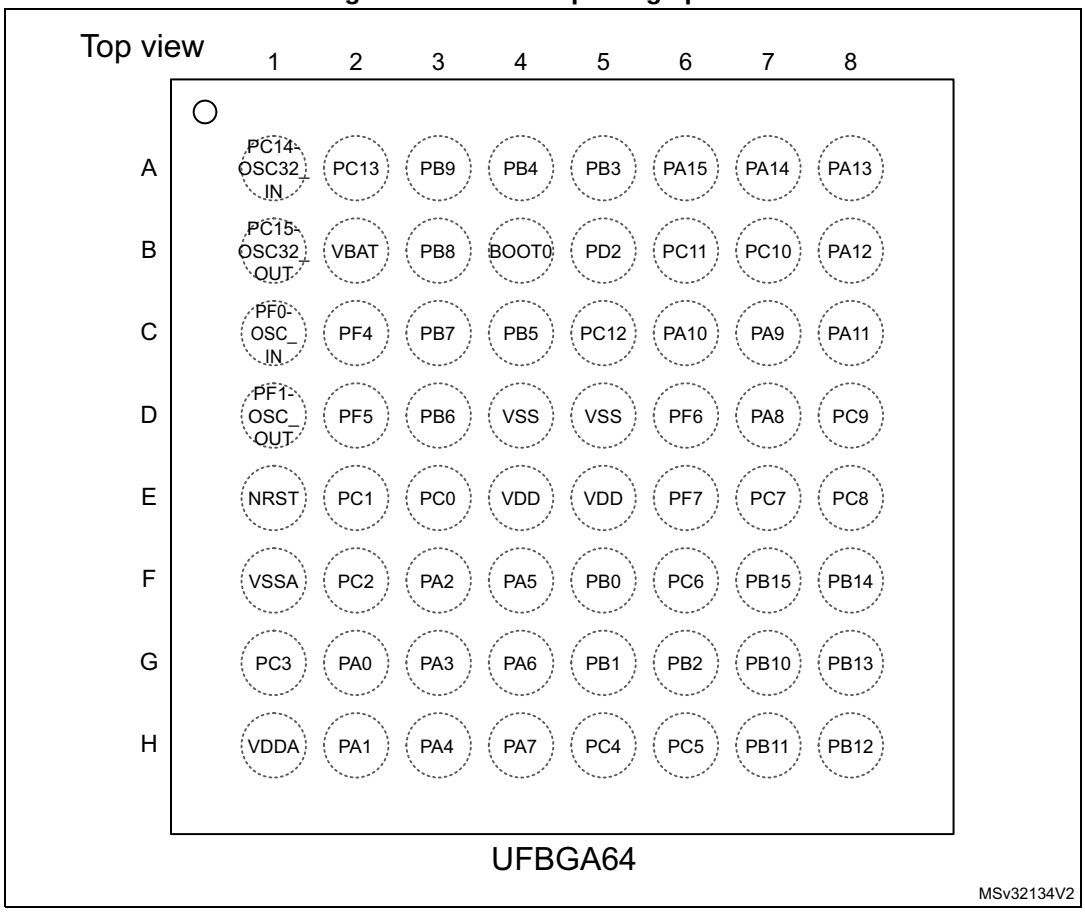

Figure 5. LQFP48 package pinout

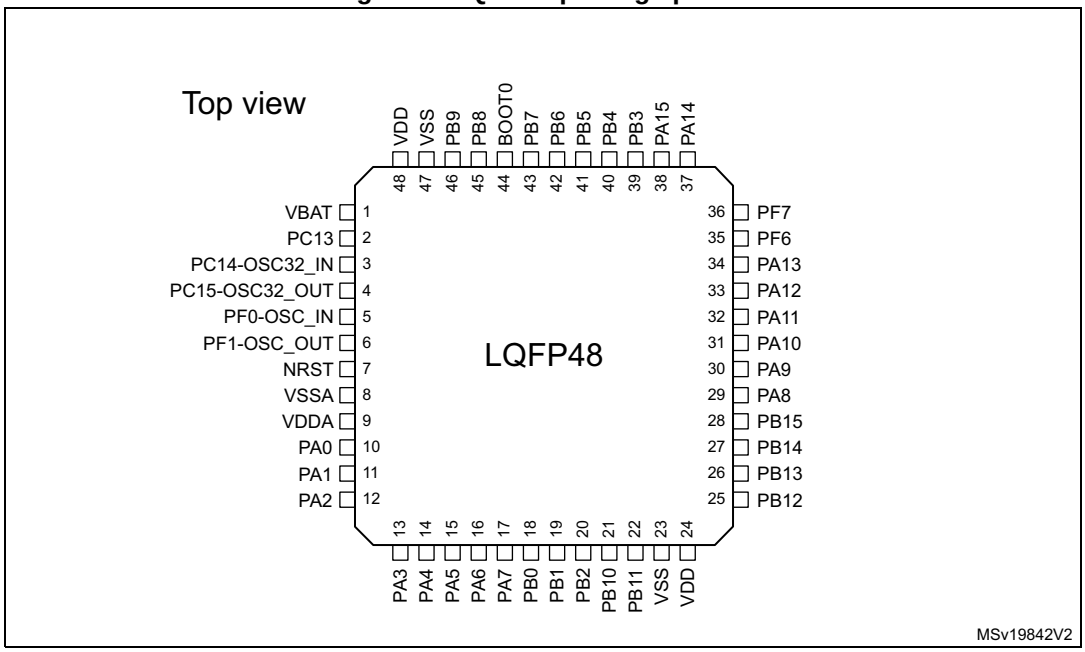

Figure 6. UFQFPN48 package pinout

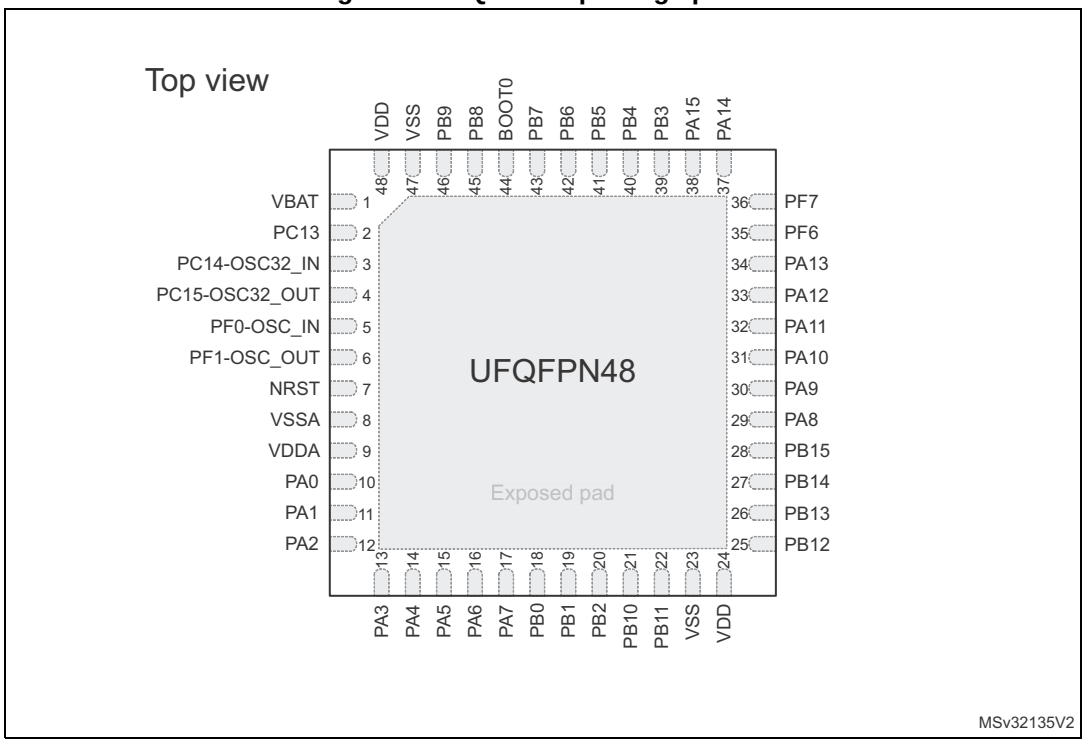

Figure 7. WLCSP36 package pinout

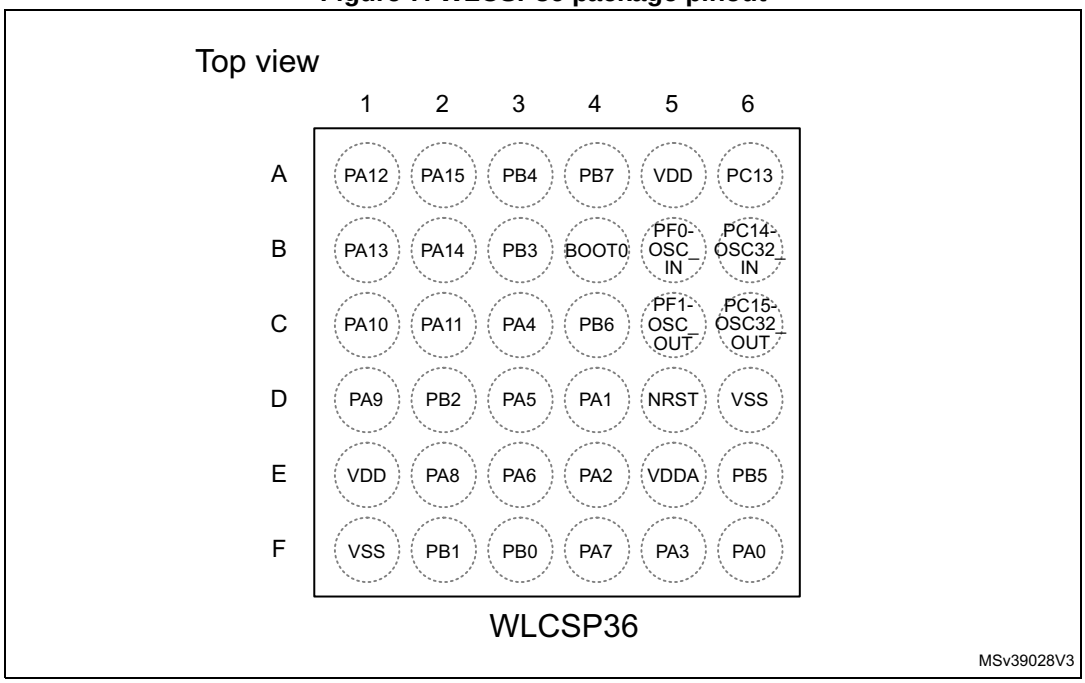

1. The above figure shows the package in top view, changing from bottom view in the previous document versions.

Figure 8. LQFP32 package pinout

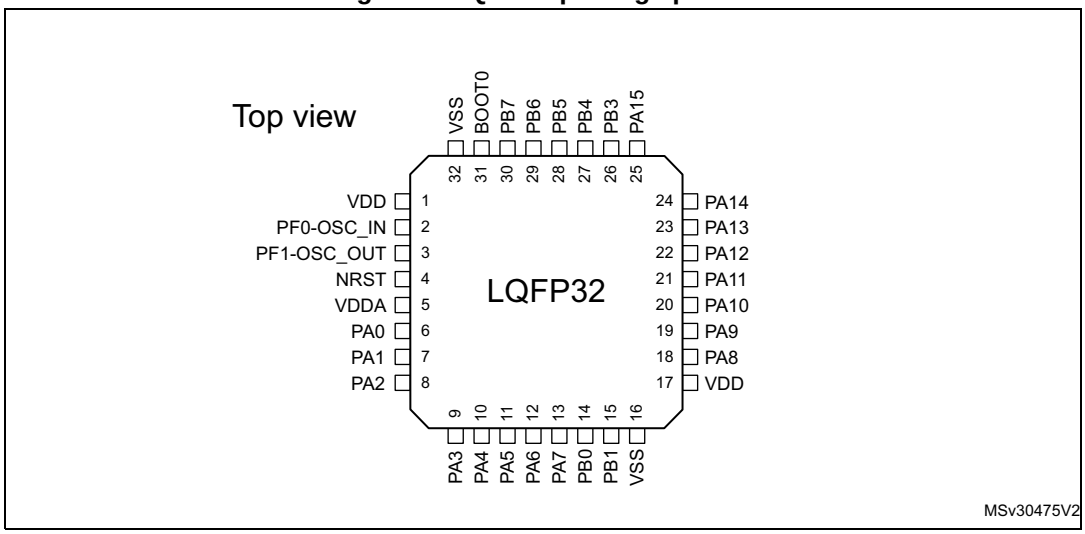

Figure 9. UFQFPN32 package pinout

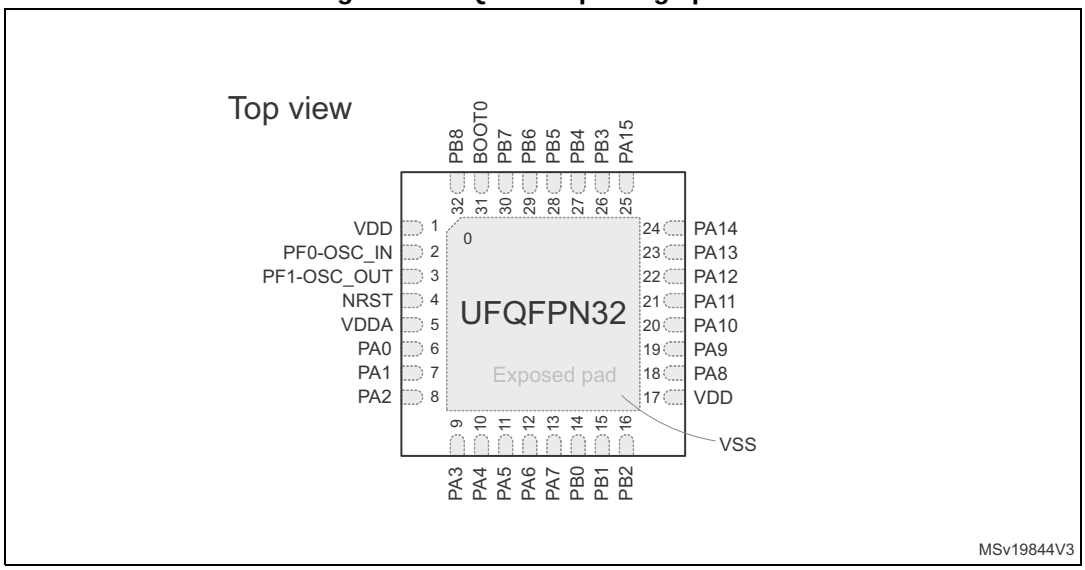

Table 12. Legend/abbreviations used in the pinout table

Name		Abbreviation	Definition
Pin name		Unless otherwise specified in brackets below the pin name, the pin function during and after reset is the same as the actual pin name	
Pin type		S	Supply pin
		I	Input-only pin
		I/O	Input / output pin
I/O structure		FT	5 V-tolerant I/O
		FTf	5 V-tolerant I/O, FM+ capable
		TTa	3.3 V-tolerant I/O directly connected to ADC
		TC	Standard 3.3 V I/O
		B	Dedicated BOOT0 pin
		RST	Bidirectional reset pin with embedded weak pull-up resistor
Notes		Unless otherwise specified by a note, all I/Os are set as floating inputs during and after reset.	
Pin functions	Alternate functions	Functions selected through GPIOx_AFR registers	
	Additional functions	Functions directly selected/enabled through peripheral registers	

Table 13. Pin definitions

Pin number						Pin name (function upon reset)	Pin type	I/O structure	Notes	Pin functions	
LQFP64	UFBGA64	LQFP48/UFQFPN48	WLCSP36	LQFP32	UFQFPN32					Alternate functions	Additional functions
1	B2	1	-	-	-	VBAT	S	-	-	Backup power supply	
2	A2	2	A6	-	-	PC13	I/O	TC	(1)(2)	-	RTC_TAMP1, RTC_TS, RTC_OUT, WKUP2
3	A1	3	B6	-	-	PC14-OSC32_IN (PC14)	I/O	TC	(1)(2)	-	OSC32_IN
4	B1	4	C6	-	-	PC15-OSC32_OUT (PC15)	I/O	TC	(1)(2)	-	OSC32_OUT
5	C1	5	B5	2	2	PF0-OSC_IN (PF0)	I/O	FT	-	-	OSC_IN
6	D1	6	C5	3	3	PF1-OSC_OUT (PF1)	I/O	FT	-	-	OSC_OUT

Table 13. Pin definitions (continued)

Pin number						Pin name (function upon reset)	Pin type	I/O structure	Notes	Pin functions	
LQFP64	UFBGA64	LQFP48/UFQFPN48	WLCSP36	LQFP32	UFQFPN32					Alternate functions	Additional functions
7	E1	7	D5	4	4	NRST	I/O	RST	-	Device reset input / internal reset output (active low)	
8	E3	-	-	-	-	PC0	I/O	TTa	-	EVENTOUT	ADC_IN10
9	E2	-	-	-	-	PC1	I/O	TTa	-	EVENTOUT	ADC_IN11
10	F2	-	-	-	-	PC2	I/O	TTa	-	EVENTOUT	ADC_IN12
11	G1	-	-	-	-	PC3	I/O	TTa	-	EVENTOUT	ADC_IN13
12	F1	8	D6	16	0	VSSA	S	-	(3)	Analog ground	
13	H1	9	E5	5	5	VDDA	S	-	-	Analog power supply	
14	G2	10	F6	6	6	PA0	I/O	TTa	-	USART2_CTS, TIM2_CH1_ETR, COMP1_OUT, TSC_G1_IO1	ADC_IN0, COMP1_INM6, RTC_TAMP2, WKUP1
15	H2	11	D4	7	7	PA1	I/O	TTa	-	USART2_RTS, TIM2_CH2, TSC_G1_IO2, EVENTOUT	ADC_IN1, COMP1_INP
16	F3	12	E4	8	8	PA2	I/O	TTa	-	USART2_TX, TIM2_CH3, TIM15_CH1, COMP2_OUT, TSC_G1_IO3	ADC_IN2, COMP2_INM6
17	G3	13	F5	9	9	PA3	I/O	TTa	-	USART2_RX, TIM2_CH4, TIM15_CH2, TSC_G1_IO4	ADC_IN3, COMP2_INP
18	C2	-	-	-	-	PF4	I/O	FT	-	EVENTOUT	-
19	D2	-	-	-	-	PF5	I/O	FT	-	EVENTOUT	-
20	H3	14	C3	10	10	PA4	I/O	TTa	-	SPI1_NSS, I2S1_WS, USART2_CK, TIM14_CH1, TSC_G2_IO1	ADC_IN4, COMP1_INM4, COMP2_INM4, DAC_OUT1
21	F4	15	D3	11	11	PA5	I/O	TTa	-	SPI1_SCK, I2S1_CK, CEC, TIM2_CH1_ETR, TSC_G2_IO2	ADC_IN5, COMP1_INM5, COMP2_INM5

Table 13. Pin definitions (continued)

Pin number						Pin name (function upon reset)	Pin type	I/O structure	Notes	Pin functions	
LQFP64	UFBGA64	LQFP48/UFQFPN48	WLCSP36	LQFP32	UFQFPN32					Alternate functions	Additional functions
22	G4	16	E3	12	12	PA6	I/O	TTa	-	SPI1_MISO, I2S1_MCK, TIM3_CH1, TIM1_BKIN, TIM16_CH1, COMP1_OUT, TSC_G2_IO3, EVENTOUT	ADC_IN6
23	H4	17	F4	13	13	PA7	I/O	TTa	-	SPI1_MOSI, I2S1_SD, TIM3_CH2, TIM14_CH1, TIM1_CH1N, TIM17_CH1, COMP2_OUT, TSC_G2_IO4, EVENTOUT	ADC_IN7
24	H5	-	-	-	-	PC4	I/O	TTa	-	EVENTOUT	ADC_IN14
25	H6	-	-	-	-	PC5	I/O	TTa	-	TSC_G3_IO1	ADC_IN15
26	F5	18	F3	14	14	PB0	I/O	TTa	-	TIM3_CH3, TIM1_CH2N, TSC_G3_IO2, EVENTOUT	ADC_IN8
27	G5	19	F2	15	15	PB1	I/O	TTa	-	TIM3_CH4, TIM14_CH1, TIM1_CH3N, TSC_G3_IO3	ADC_IN9
28	G6	20	D2	-	16	PB2	I/O	FT	(4)	TSC_G3_IO4	-
29	G7	21	-	-	-	PB10	I/O	FT	(5)	I2C2_SCL, CEC, TIM2_CH3, TSC_SYNC	-
30	H7	22	-	-	-	PB11	I/O	FT	(5)	I2C2_SDA, TIM2_CH4, TSC_G6_IO1, EVENTOUT	-
31	D4	23	F1	16	0	VSS	S	-	-	Ground	
32	E4	24	E1	17	17	VDD	S	-	-	Digital power supply	

Table 13. Pin definitions (continued)

Pin number						Pin name (function upon reset)	Pin type	I/O structure	Notes	Pin functions	
LQFP64	UFBGA64	LQFP48/UFQFPN48	WLCSP36	LQFP32	UFQFPN32					Alternate functions	Additional functions
33	H8	25	-	-	-	PB12	I/O	FT	(5)	SPI2_NSS, TIM1_BKIN, TSC_G6_IO2, EVENTOUT	-
34	G8	26	-	-	-	PB13	I/O	FT	(5)	SPI2_SCK, TIM1_CH1N, TSC_G6_IO3	-
35	F8	27	-	-	-	PB14	I/O	FT	(5)	SPI2_MISO, TIM1_CH2N, TIM15_CH1, TSC_G6_IO4	-
36	F7	28	-	-	-	PB15	I/O	FT	(5)	SPI2_MOSI, TIM1_CH3N, TIM15_CH1N, TIM15_CH2	RTC_REFIN
37	F6	-	-	-	-	PC6	I/O	FT	-	TIM3_CH1	-
38	E7	-	-	-	-	PC7	I/O	FT	-	TIM3_CH2	-
39	E8	-	-	-	-	PC8	I/O	FT	-	TIM3_CH3	-
40	D8	-	-	-	-	PC9	I/O	FT	-	TIM3_CH4	-
41	D7	29	E2	18	18	PA8	I/O	FT	-	USART1_CK, TIM1_CH1, EVENTOUT, MCO	-
42	C7	30	D1	19	19	PA9	I/O	FT	-	USART1_TX, TIM1_CH2, TIM15_BKIN, TSC_G4_IO1	-
43	C6	31	C1	20	20	PA10	I/O	FT	-	USART1_RX, TIM1_CH3, TIM17_BKIN, TSC_G4_IO2	-
44	C8	32	C2	21	21	PA11	I/O	FT	-	USART1_CTS, TIM1_CH4, COMP1_OUT, TSC_G4_IO3, EVENTOUT	-

Table 13. Pin definitions (continued)

Pin number						Pin name (function upon reset)	Pin type	I/O structure	Notes	Pin functions	
LQFP64	UFBGA64	LQFP48/UFQFPN48	WLCSP36	LQFP32	UFQFPN32					Alternate functions	Additional functions
45	B8	33	A1	22	22	PA12	I/O	FT	-	USART1_RTS, TIM1_ETR, COMP2_OUT, TSC_G4_IO4, EVENTOUT	-
46	A8	34	B1	23	23	PA13 (SWDIO)	I/O	FT	(6)	IR_OUT, SWDIO	-
47	D6	35	-	-	-	PF6	I/O	FT	-	I2C2_SCL	-
48	E6	36	-	-	-	PF7	I/O	FT	-	I2C2_SDA	-
49	A7	37	B2	24	24	PA14 (SWCLK)	I/O	FT	(6)	USART2_TX, SWCLK	-
50	A6	38	A2	25	25	PA15	I/O	FT	-	SPI1_NSS, I2S1_WS, USART2_RX, TIM2_CH1_ETR, EVENTOUT	-
51	B7	-	-	-	-	PC10	I/O	FT	-		-
52	B6	-	-	-	-	PC11	I/O	FT	-		-
53	C5	-	-	-	-	PC12	I/O	FT	-		-
54	B5	-	-	-	-	PD2	I/O	FT	-	TIM3_ETR	-
55	A5	39	B3	26	26	PB3	I/O	FT	-	SPI1_SCK, I2S1_CK, TIM2_CH2, TSC_G5_IO1, EVENTOUT	-
56	A4	40	A3	27	27	PB4	I/O	FT	-	SPI1_MISO, I2S1_MCK, TIM3_CH1, TSC_G5_IO2, EVENTOUT	-
57	C4	41	E6	28	28	PB5	I/O	FT	-	SPI1_MOSI, I2S1_SD, I2C1_SMBA, TIM16_BKIN, TIM3_CH2	-

Table 13. Pin definitions (continued)

Pin number						Pin name (function upon reset)	Pin type	I/O structure	Notes	Pin functions	
LQFP64	UFBGA64	LQFP48/UFQFPN48	WLCSP36	LQFP32	UFQFPN32					Alternate functions	Additional functions
58	D3	42	C4	29	29	PB6	I/O	FTf	-	I2C1_SCL, USART1_TX, TIM16_CH1N, TSC_G5_IO3	-
59	C3	43	A4	30	30	PB7	I/O	FTf	-	I2C1_SDA, USART1_RX, TIM17_CH1N, TSC_G5_IO4	-
60	B4	44	B4	31	31	BOOT0	I	B	-	Boot memory selection	
61	B3	45	-	-	32	PB8	I/O	FTf	(4)(5)	I2C1_SCL, CEC, TIM16_CH1, TSC_SYNC	-
62	A3	46	-	-	-	PB9	I/O	FTf	(5)	I2C1_SDA, IR_OUT, TIM17_CH1, EVENTOUT	-
63	D5	47	D6	32	0	VSS	S	-	-	Ground	
64	E5	48	A5	1	1	VDD	S	-	-	Digital power supply	

1. PC13, PC14 and PC15 are supplied through the power switch. Since the switch only sinks a limited amount of current (3 mA), the use of GPIOs PC13 to PC15 in output mode is limited:
   - The speed should not exceed 2 MHz with a maximum load of 30 pF.
   - These GPIOs must not be used as current sources (e.g. to drive an LED).
2. After the first RTC domain power-up, PC13, PC14 and PC15 operate as GPIOs. Their function then depends on the content of the RTC registers which are not reset by the main reset. For details on how to manage these GPIOs, refer to the RTC domain and RTC register descriptions in the reference manual.
3. Distinct VSSA pin is only available on packages with 48 and more pins. For all other packages, the pin number corresponds to the VSS pin to which VSSA pad of the silicon die is connected.
4. On the LQFP32 package, PB2 and PB8 must be set to defined levels by software, as their corresponding pads on the silicon die are left unconnected. Apply the same recommendations as for unconnected pins.
5. On the WLCSP36 package, PB8, PB9, PB10, PB11, PB12, PB13, PB14 and PB15 must be set to defined levels by software, as their corresponding pads on the silicon die are left unconnected. Apply the same recommendations as for unconnected pins.
6. After reset, these pins are configured as SWDIO and SWCLK alternate functions, and the internal pull-up on the SWDIO pin and the internal pull-down on the SWCLK pin are activated.

Table 14. Alternate functions selected through GPIOA_AFR registers for port A

Pin name	AF0	AF1	AF2	AF3	AF4	AF5	AF6	AF7
PA0	-	USART2_CTS	TIM2_CH1_ETR	TSC_G1_IO1		-	-	COMP1_OUT
PA1	EVENTOUT	USART2_RTS	TIM2_CH2	TSC_G1_IO2			-	-
PA2	TIM15_CH1	USART2_TX	TIM2_CH3	TSC_G1_IO3	-	-	-	COMP2_OUT
PA3	TIM15_CH2	USART2_RX	TIM2_CH4	TSC_G1_IO4	-	-	-	-
PA4	SPI1_NSS, I2S1_WS	USART2_CK	-	TSC_G2_IO1	TIM14_CH1	-	-	-
PA5	SPI1_SCK, I2S1_CK	CEC	TIM2_CH1_ETR	TSC_G2_IO2	-	-	-	-
PA6	SPI1_MISO, I2S1_MCK	TIM3_CH1	TIM1_BKIN	TSC_G2_IO3		TIM16_CH1	EVENTOUT	COMP1_OUT
PA7	SPI1_MOSI, I2S1_SD	TIM3_CH2	TIM1_CH1N	TSC_G2_IO4	TIM14_CH1	TIM17_CH1	EVENTOUT	COMP2_OUT
PA8	MCO	USART1_CK	TIM1_CH1	EVENTOUT		-	-	-
PA9	TIM15_BKIN	USART1_TX	TIM1_CH2	TSC_G4_IO1	-	-	-	-
PA10	TIM17_BKIN	USART1_RX	TIM1_CH3	TSC_G4_IO2	-	-	-	-
PA11	EVENTOUT	USART1_CTS	TIM1_CH4	TSC_G4_IO3	-	-	-	COMP1_OUT
PA12	EVENTOUT	USART1_RTS	TIM1_ETR	TSC_G4_IO4	-	-	-	COMP2_OUT
PA13	SWDIO	IR_OUT		-	-	-	-	-
PA14	SWCLK	USART2_TX	-	-	-	-	-	-
PA15	SPI1_NSS, I2S1_WS	USART2_RX	TIM2_CH1_ETR	EVENTOUT		-	-	-

Table 15. Alternate functions selected through GPIOB_AFR registers for port B

Pin name	AF0	AF1	AF2	AF3
PB0	EVENTOUT	TIM3_CH3	TIM1_CH2N	TSC_G3_IO2
PB1	TIM14_CH1	TIM3_CH4	TIM1_CH3N	TSC_G3_IO3
PB2				TSC_G3_IO4
PB3	SPI1_SCK, I2S1_CK	EVENTOUT	TIM2_CH2	TSC_G5_IO1
PB4	SPI1_MISO, I2S1_MCK	TIM3_CH1	EVENTOUT	TSC_G5_IO2
PB5	SPI1_MOSI, I2S1_SD	TIM3_CH2	TIM16_BKIN	I2C1_SMBA
PB6	USART1_TX	I2C1_SCL	TIM16_CH1N	TSC_G5_IO3
PB7	USART1_RX	I2C1_SDA	TIM17_CH1N	TSC_G5_IO4
PB8	CEC	I2C1_SCL	TIM16_CH1	TSC_SYNC
PB9	IR_OUT	I2C1_SDA	TIM17_CH1	EVENTOUT
PB10	CEC	I2C2_SCL	TIM2_CH3	TSC_SYNC
PB11	EVENTOUT	I2C2_SDA	TIM2_CH4	TSC_G6_IO1
PB12	SPI2_NSS	EVENTOUT	TIM1_BKIN	TSC_G6_IO2
PB13	SPI2_SCK		TIM1_CH1N	TSC_G6_IO3
PB14	SPI2_MISO	TIM15_CH1	TIM1_CH2N	TSC_G6_IO4
PB15	SPI2_MOSI	TIM15_CH2	TIM1_CH3N	TIM15_CH1N

5 Memory mapping

To the difference of STM32F051x8 memory map in *Figure 10*, the two bottom code memory spaces of STM32F051x4/STM32F051x6 end at 0x0000 3FFF/0x0000 7FFF and 0x0800 3FFF/0x0000 7FFF, respectively.

Figure 10. STM32F051x8 memory map

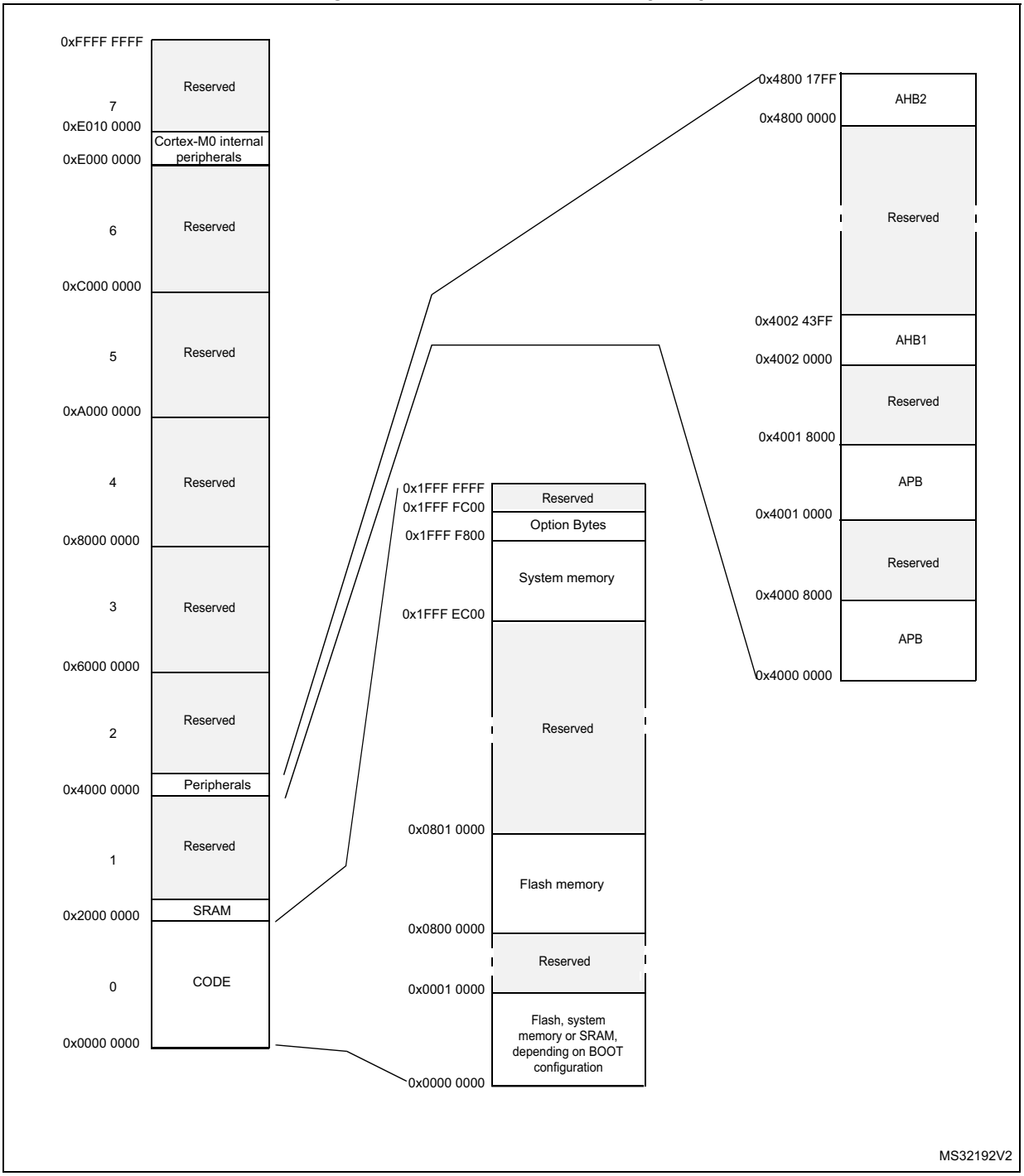

Table 16. STM32F051xx peripheral register boundary addresses

Bus	Boundary address	Size	Peripheral
	0x4800 1800 - 0x5FFF FFFF	~384 MB	Reserved
AHB2	0x4800 1400 - 0x4800 17FF	1 KB	GPIOF
	0x4800 1000 - 0x4800 13FF	1 KB	Reserved
	0x4800 0C00 - 0x4800 0FFF	1 KB	GPIOD
	0x4800 0800 - 0x4800 0BFF	1 KB	GPIOC
	0x4800 0400 - 0x4800 07FF	1 KB	GPIOB
	0x4800 0000 - 0x4800 03FF	1 KB	GPIOA
	0x4002 4400 - 0x47FF FFFF	~128 MB	Reserved
AHB1	0x4002 4000 - 0x4002 43FF	1 KB	TSC
	0x4002 3400 - 0x4002 3FFF	3 KB	Reserved
	0x4002 3000 - 0x4002 33FF	1 KB	CRC
	0x4002 2400 - 0x4002 2FFF	3 KB	Reserved
	0x4002 2000 - 0x4002 23FF	1 KB	Flash memory interface
	0x4002 1400 - 0x4002 1FFF	3 KB	Reserved
	0x4002 1000 - 0x4002 13FF	1 KB	RCC
	0x4002 0400 - 0x4002 0FFF	3 KB	Reserved
	0x4002 0000 - 0x4002 03FF	1 KB	DMA
	0x4001 8000 - 0x4001 FFFF	32 KB	Reserved
APB	0x4001 5C00 - 0x4001 7FFF	9 KB	Reserved
	0x4001 5800 - 0x4001 5BFF	1 KB	DBGMCU
	0x4001 4C00 - 0x4001 57FF	3 KB	Reserved
	0x4001 4800 - 0x4001 4BFF	1 KB	TIM17
	0x4001 4400 - 0x4001 47FF	1 KB	TIM16
	0x4001 4000 - 0x4001 43FF	1 KB	TIM15
	0x4001 3C00 - 0x4001 3FFF	1 KB	Reserved
	0x4001 3800 - 0x4001 3BFF	1 KB	USART1
	0x4001 3400 - 0x4001 37FF	1 KB	Reserved
	0x4001 3000 - 0x4001 33FF	1 KB	SPI1/I2S1
	0x4001 2C00 - 0x4001 2FFF	1 KB	TIM1
	0x4001 2800 - 0x4001 2BFF	1 KB	Reserved
	0x4001 2400 - 0x4001 27FF	1 KB	ADC
	0x4001 0800 - 0x4001 23FF	7 KB	Reserved
	0x4001 0400 - 0x4001 07FF	1 KB	EXTI
	0x4001 0000 - 0x4001 03FF	1 KB	SYSCFG + COMP
	0x4000 8000 - 0x4000 FFFF	32 KB	Reserved

Table 16. STM32F051xx peripheral register boundary addresses (continued)

Bus	Boundary address	Size	Peripheral
APB	0x4000 7C00 - 0x4000 7FFF	1 KB	Reserved
	0x4000 7800 - 0x4000 7BFF	1 KB	CEC
	0x4000 7400 - 0x4000 77FF	1 KB	DAC
	0x4000 7000 - 0x4000 73FF	1 KB	PWR
	0x4000 5C00 - 0x4000 6FFF	5 KB	Reserved
	0x4000 5800 - 0x4000 5BFF	1 KB	I2C2
	0x4000 5400 - 0x4000 57FF	1 KB	I2C1
	0x4000 4800 - 0x4000 53FF	3 KB	Reserved
	0x4000 4400 - 0x4000 47FF	1 KB	USART2
	0x4000 3C00 - 0x4000 43FF	2 KB	Reserved
	0x4000 3800 - 0x4000 3BFF	1 KB	SPI2
	0x4000 3400 - 0x4000 37FF	1 KB	Reserved
	0x4000 3000 - 0x4000 33FF	1 KB	IWDG
	0x4000 2C00 - 0x4000 2FFF	1 KB	WWDG
	0x4000 2800 - 0x4000 2BFF	1 KB	RTC
	0x4000 2400 - 0x4000 27FF	1 KB	Reserved
	0x4000 2000 - 0x4000 23FF	1 KB	TIM14
	0x4000 1400 - 0x4000 1FFF	3 KB	Reserved
	0x4000 1000 - 0x4000 13FF	1 KB	TIM6
	0x4000 0800 - 0x4000 0FFF	2 KB	Reserved
	0x4000 0400 - 0x4000 07FF	1 KB	TIM3
	0x4000 0000 - 0x4000 03FF	1 KB	TIM2

6 Electrical characteristics

6.1 Parameter conditions

Unless otherwise specified, all voltages are referenced to V_{SS}.

6.1.1 Minimum and maximum values

Unless otherwise specified, the minimum and maximum values are guaranteed in the worst conditions of ambient temperature, supply voltage and frequencies by tests in production on 100% of the devices with an ambient temperature at T_A = 25 °C and T_A = $T_A$max (given by the selected temperature range).

Data based on characterization results, design simulation and/or technology characteristics are indicated in the table footnotes and are not tested in production. Based on characterization, the minimum and maximum values refer to sample tests and represent the mean value plus or minus three times the standard deviation (mean ±3σ).

6.1.2 Typical values

Unless otherwise specified, typical data are based on T_A = 25 °C, V_{DD} = V_{DDA} = 3.3 V. They are given only as design guidelines and are not tested.

Typical ADC accuracy values are determined by characterization of a batch of samples from a standard diffusion lot over the full temperature range, where 95% of the devices have an error less than or equal to the value indicated (mean ±2σ).

6.1.3 Typical curves

Unless otherwise specified, all typical curves are given only as design guidelines and are not tested.

6.1.4 Loading capacitor

The loading conditions used for pin parameter measurement are shown in *Figure 11*.

6.1.5 Pin input voltage

The input voltage measurement on a pin of the device is described in *Figure 12*.

Figure 11. Pin loading conditions

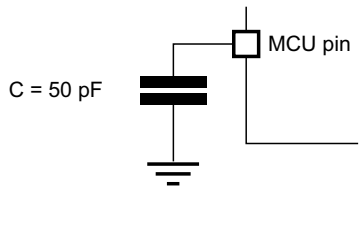

Figure 12. Pin input voltage

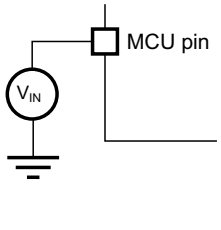

6.1.6 Power supply scheme

Figure 13. Power supply scheme

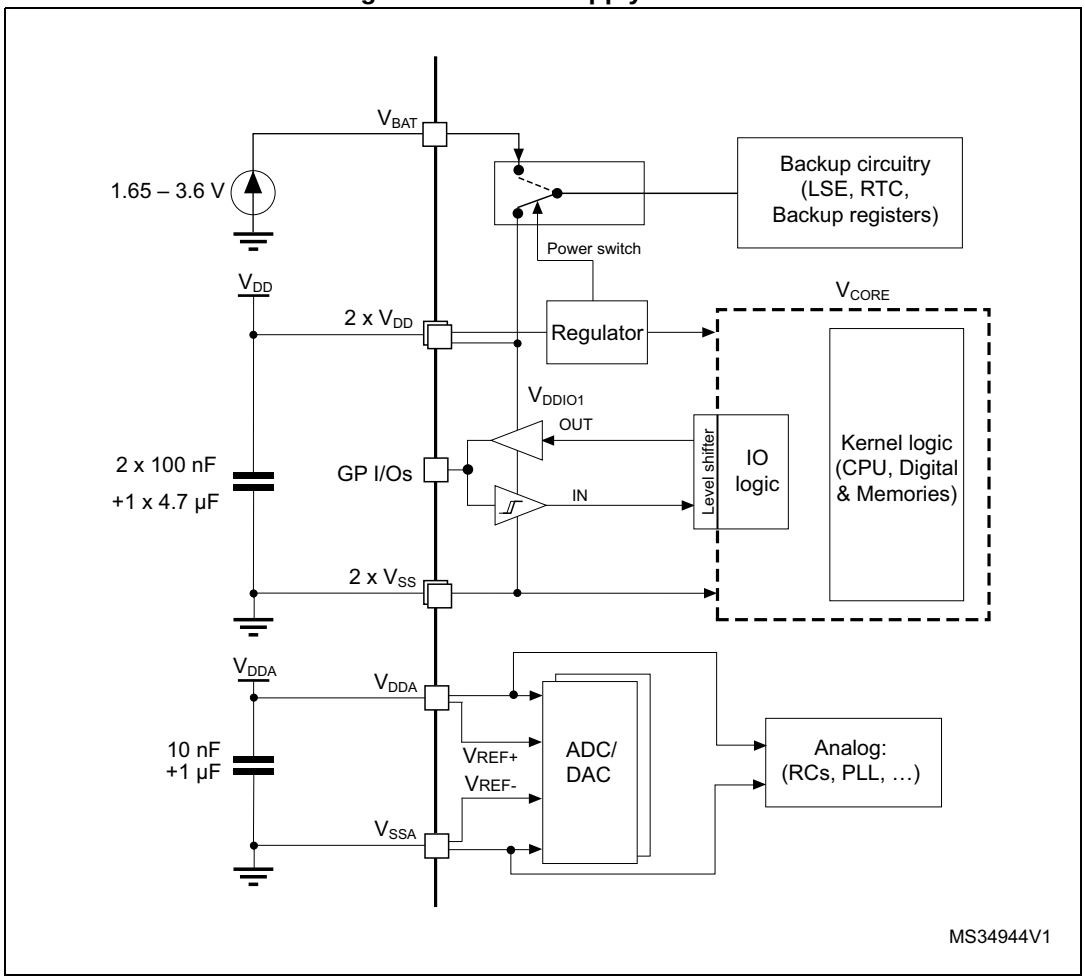

Caution: Each power supply pair (V_{DD}/V_{SS}, V_{DDA}/V_{SSA} etc.) must be decoupled with filtering ceramic capacitors as shown above. These capacitors must be placed as close as possible to, or below, the appropriate pins on the underside of the PCB to ensure the good functionality of the device.

6.1.7 Current consumption measurement

Figure 14. Current consumption measurement scheme

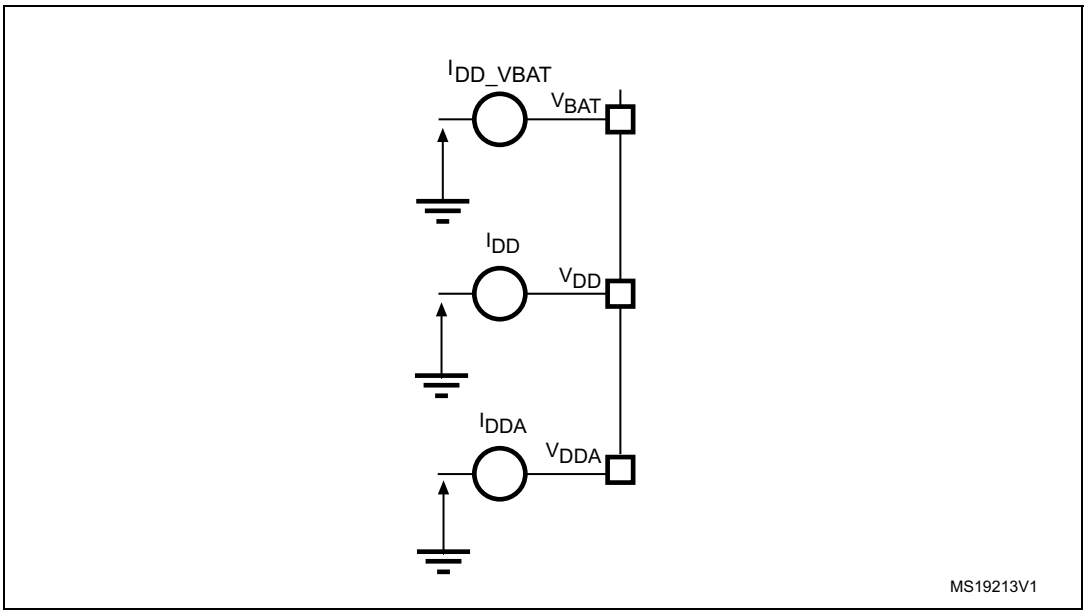

6.2 Absolute maximum ratings

Stresses above the absolute maximum ratings listed in *Table 17: Voltage characteristics*, *Table 18: Current characteristics* and *Table 19: Thermal characteristics* may cause permanent damage to the device. These are stress ratings only and functional operation of the device at these conditions is not implied. Exposure to maximum rating conditions for extended periods may affect device reliability.

Table 17. Voltage characteristics(1)

Symbol	Ratings	Min	Max	Unit
V_{DD}–V_{SS}	External main supply voltage	- 0.3	4.0	V
V_{DDA}–V_{SS}	External analog supply voltage	- 0.3	4.0	V
V_{DD}–V_{DDA}	Allowed voltage difference for $V_{DD} > V_{DDA}$	-	0.4	V
V_{BAT}–V_{SS}	External backup supply voltage	- 0.3	4.0	V
V_{IN}(2)	Input voltage on FT and FTf pins	V_{SS} - 0.3	V_{DDIOx} + 4.0(3)	V
	Input voltage on TTa pins	V_{SS} - 0.3	4.0	V
	BOOT0	0	9.0	V
	Input voltage on any other pin	V_{SS} - 0.3	4.0	V
$\lvert\Delta V_{DDx}\rvert$	Variations between different V_{DD} power pins	-	50	mV
$\lvert V_{SSx} - V_{SS}\rvert$	Variations between all the different ground pins	-	50	mV
$V_{ESD(HBM)}$	Electrostatic discharge voltage (human body model)	see *Section 6.3.12: Electrical sensitivity characteristics*		-

1. All main power (V_{DD}, V_{DDA}) and ground (V_{SS}, V_{SSA}) pins must always be connected to the external power supply, in the permitted range.
2. V_{IN} maximum must always be respected. Refer to *Table 18: Current characteristics* for the maximum allowed injected current values.
3. Valid only if the internal pull-up/pull-down resistors are disabled. If internal pull-up or pull-down resistor is enabled, the maximum limit is 4 V.

Table 18. Current characteristics

Symbol	Ratings	Max.	Unit
ΣI_{VDD}	Total current into sum of all VDD power lines (source)(1)	120	mA
ΣI_{VSS}	Total current out of sum of all VSS ground lines (sink)(1)	-120	
$I_{VDD(PIN)}$	Maximum current into each VDD power pin (source)(1)	100	
$I_{VSS(PIN)}$	Maximum current out of each VSS ground pin (sink)(1)	-100	
$I_{IO(PIN)}$	Output current sunk by any I/O and control pin	25	
	Output current source by any I/O and control pin	-25	
$\Sigma I_{IO(PIN)}$	Total output current sunk by sum of all I/Os and control pins(2)	80	
	Total output current sourced by sum of all I/Os and control pins(2)	-80	
$I_{INJ(PIN)}$(3)	Injected current on B, FT and FTf pins	-5/+0(4)	
	Injected current on TC and RST pin	± 5	
	Injected current on TTa pins(5)	± 5	
$\Sigma I_{INJ(PIN)}$	Total injected current (sum of all I/O and control pins)(6)	± 25	

1. All main power (VDD, VDDA) and ground (VSS, VSSA) pins must always be connected to the external power supply, in the permitted range.
2. This current consumption must be correctly distributed over all I/Os and control pins. The total output current must not be sunk/sourced between two consecutive power supply pins referring to high pin count QFP packages.
3. A positive injection is induced by $V_{IN} > V_{DDIOx}$ while a negative injection is induced by $V_{IN} < V_{SS}$. $I_{INJ(PIN)}$ must never be exceeded. Refer to *Table 17: Voltage characteristics* for the maximum allowed input voltage values.
4. Positive injection is not possible on these I/Os and does not occur for input voltages lower than the specified maximum value.
5. On these I/Os, a positive injection is induced by $V_{IN} > V_{DDA}$. Negative injection disturbs the analog performance of the device. See note (2) below *Table 54: ADC accuracy*.
6. When several inputs are submitted to a current injection, the maximum $\Sigma I_{INJ(PIN)}$ is the absolute sum of the positive and negative injected currents (instantaneous values).

Table 19. Thermal characteristics

Symbol	Ratings	Value	Unit
T_{STG}	Storage temperature range	–65 to +150	°C
T_J	Maximum junction temperature	150	°C

6.3 Operating conditions

6.3.1 General operating conditions

Table 20. General operating conditions

Symbol	Parameter	Conditions	Min	Max	Unit
f_{HCLK}	Internal AHB clock frequency	-	0	48	MHz
f_{PCLK}	Internal APB clock frequency	-	0	48	
V_{DD}	Standard operating voltage	-	2.0	3.6	V
V_{DDA}	Analog operating voltage (ADC and DAC not used)	Must have a potential equal to or higher than V_{DD}	V_{DD}	3.6	V
	Analog operating voltage (ADC and DAC used)		2.4	3.6	
V_{BAT}	Backup operating voltage	-	1.65	3.6	V
V_{IN}	I/O input voltage	TC and RST I/O	–0.3	V_{DDIOx}+0.3	V
		TTa I/O	–0.3	V_{DDA}+0.3(1)	
		FT and FTf I/O	–0.3	5.5(1)	
		BOOT0	0	5.5	
P_D	Power dissipation at T_A = 85 °C for suffix 6 or T_A = 105 °C for suffix 7(2)	LQFP64	-	444	mW
		LQFP48	-	364	
		LQFP32	-	357	
		UFQFPN32	-	526	
		UFQFPN48	-	625	
		UFBGA64	-	308	
		WLCSP36	-	333	
T_A	Ambient temperature for the suffix 6 version	Maximum power dissipation	–40	85	°C
		Low power dissipation(3)	–40	105	
	Ambient temperature for the suffix 7 version	Maximum power dissipation	–40	105	°C
		Low power dissipation(3)	–40	125	
T_J	Junction temperature range	Suffix 6 version	–40	105	°C
		Suffix 7 version	–40	125	

1. For operation with a voltage higher than V_{DDIOx} + 0.3 V, the internal pull-up resistor must be disabled.
2. If T_A is lower, higher P_D values are allowed as long as T_J does not exceed T_{Jmax}. See *Section 7.8: Thermal characteristics*.
3. In low power dissipation state, T_A can be extended to this range as long as T_J does not exceed T_{Jmax} (see *Section 7.8: Thermal characteristics*).

6.3.2 Operating conditions at power-up / power-down

The parameters given in *Table 21* are derived from tests performed under the ambient temperature condition summarized in *Table 20*.

Table 21. Operating conditions at power-up / power-down

Symbol	Parameter	Conditions	Min	Max	Unit
t_{VDD}	V_{DD} rise time rate	-	0	∞	µs/V
	V_{DD} fall time rate		20	∞	
t_{VDDA}	V_{DDA} rise time rate	-	0	∞	
	V_{DDA} fall time rate		20	∞	

6.3.3 Embedded reset and power control block characteristics

The parameters given in *Table 22* are derived from tests performed under the ambient temperature and supply voltage conditions summarized in *Table 20: General operating conditions*.

Table 22. Embedded reset and power control block characteristics

Symbol	Parameter	Conditions	Min	Typ	Max	Unit
$V_{POR/PDR}$(1)	Power on/power down reset threshold	Falling edge(2)	1.80	1.88	1.96(3)	V
		Rising edge	1.84(3)	1.92	2.00	V
$V_{PDRhyst}$	PDR hysteresis	-	-	40	-	mV
$t_{RSTTEMPO}$(4)	Reset temporization	-	1.50	2.50	4.50	ms

1. The PDR detector monitors V_{DD} and also V_{DDA} (if kept enabled in the option bytes). The POR detector monitors only V_{DD}.
2. The product behavior is guaranteed by design down to the minimum $V_{POR/PDR}$ value.
3. Data based on characterization results, not tested in production.
4. Guaranteed by design, not tested in production.

Table 23. Programmable voltage detector characteristics

Symbol	Parameter	Conditions	Min	Typ	Max	Unit
V_{PVD0}	PVD threshold 0	Rising edge	2.1	2.18	2.26	V
		Falling edge	2	2.08	2.16	V
V_{PVD1}	PVD threshold 1	Rising edge	2.19	2.28	2.37	V
		Falling edge	2.09	2.18	2.27	V
V_{PVD2}	PVD threshold 2	Rising edge	2.28	2.38	2.48	V
		Falling edge	2.18	2.28	2.38	V
V_{PVD3}	PVD threshold 3	Rising edge	2.38	2.48	2.58	V
		Falling edge	2.28	2.38	2.48	V
V_{PVD4}	PVD threshold 4	Rising edge	2.47	2.58	2.69	V
		Falling edge	2.37	2.48	2.59	V
V_{PVD5}	PVD threshold 5	Rising edge	2.57	2.68	2.79	V
		Falling edge	2.47	2.58	2.69	V

Table 23. Programmable voltage detector characteristics (continued)

Symbol	Parameter	Conditions	Min	Typ	Max	Unit
V_{PVD6}	PVD threshold 6	Rising edge	2.66	2.78	2.9	V
		Falling edge	2.56	2.68	2.8	V
V_{PVD7}	PVD threshold 7	Rising edge	2.76	2.88	3	V
		Falling edge	2.66	2.78	2.9	V
$V_{PVDhyst}$(1)	PVD hysteresis	-	-	100	-	mV
$I_{DD(PVD)}$	PVD current consumption	-	-	0.15	0.26(1)	µA

1. Guaranteed by design, not tested in production.

6.3.4 Embedded reference voltage

The parameters given in *Table 24* are derived from tests performed under the ambient temperature and supply voltage conditions summarized in *Table 20: General operating conditions*.

Table 24. Embedded internal reference voltage

Symbol	Parameter	Conditions	Min	Typ	Max	Unit
V_{REFINT}	Internal reference voltage	–40 °C < T_A < +105 °C	1.2	1.23	1.25	V
t_{START}	ADC_IN17 buffer startup time	-	-	-	10(1)	µs
$t_{S_vrefint}$	ADC sampling time when reading the internal reference voltage	-	4(1)	-	-	µs
ΔV_{REFINT}	Internal reference voltage spread over the temperature range	V_{DDA} = 3 V	-	-	10(1)	mV
T_{Coeff}	Temperature coefficient	-	- 100(1)	-	100(1)	ppm/°C

1. Guaranteed by design, not tested in production.

6.3.5 Supply current characteristics

The current consumption is a function of several parameters and factors such as the operating voltage, ambient temperature, I/O pin loading, device software configuration, operating frequencies, I/O pin switching rate, program location in memory and executed binary code.

The current consumption is measured as described in *Figure 14: Current consumption measurement scheme*.

All Run-mode current consumption measurements given in this section are performed with a reduced code that gives a consumption equivalent to CoreMark code.

Typical and maximum current consumption

The MCU is placed under the following conditions:

- All I/O pins are in analog input mode
- All peripherals are disabled except when explicitly mentioned
- The Flash memory access time is adjusted to the f_{HCLK} frequency:
  - 0 wait state and Prefetch OFF from 0 to 24 MHz
  - 1 wait state and Prefetch ON above 24 MHz
- When the peripherals are enabled $f_{PCLK} = f_{HCLK}$

The parameters given in *Table 25* to *Table 31* are derived from tests performed under ambient temperature and supply voltage conditions summarized in *Table 20: General operating conditions*.

Table 25. Typical and maximum current consumption from V_{DD} at 3.6 V

Symbol	Parameter	Conditions	f_{HCLK}	All peripherals enabled				All peripherals disabled				Unit
				Typ	Max @ T_A(1)			Typ	Max @ T_A(1)			
					25 °C	85 °C	105 °C		25 °C	85 °C	105 °C	
I_{DD}	Supply current in Run mode, code executing from Flash memory	HSE bypass, PLL on	48 MHz	22.0	22.8	22.8	23.8	11.8	12.7	12.7	13.3	mA
			32 MHz	15.0	15.5	15.5	16.0	7.6	8.7	8.7	9.0	
			24 MHz	12.2	13.2	13.2	13.6	7.2	7.9	7.9	8.1	
		HSE bypass, PLL off	8 MHz	4.4	5.2	5.2	5.4	2.7	2.9	2.9	3.0	
			1 MHz	1.0	1.3	1.3	1.4	0.7	0.9	0.9	0.9	
		HSI clock, PLL on	48 MHz	22.0	22.8	22.8	23.8	11.8	12.7	12.7	13.3	
			32 MHz	15.0	15.5	15.5	16.0	7.6	8.7	8.7	9.0	
			24 MHz	12.2	13.2	13.2	13.6	7.2	7.9	7.9	8.1	
		HSI clock, PLL off	8 MHz	4.4	5.2	5.2	5.4	2.7	2.9	2.9	3.0	
	Supply current in Run mode, code executing from RAM	HSE bypass, PLL on	48 MHz	22.2	23.2(2)	23.2	24.4(2)	12.0	12.7(2)	12.7	13.3(2)	
			32 MHz	15.4	16.3	16.3	16.8	7.8	8.7	8.7	9.0	
			24 MHz	11.2	12.2	12.2	12.8	6.2	7.9	7.9	8.1	
		HSE bypass, PLL off	8 MHz	4.0	4.5	4.5	4.7	1.9	2.9	2.9	3.0	
			1 MHz	0.6	0.8	0.8	0.9	0.3	0.6	0.6	0.7	
		HSI clock, PLL on	48 MHz	22.2	23.2	23.2	24.4	12.0	12.7	12.7	13.3	
			32 MHz	15.4	16.3	16.3	16.8	7.8	8.7	8.7	9.0	
			24 MHz	11.2	12.2	12.2	12.8	6.2	7.9	7.9	8.1	
		HSI clock, PLL off	8 MHz	4.0	4.5	4.5	4.7	1.9	2.9	2.9	3.0	

Table 25. Typical and maximum current consumption from V_{DD} at 3.6 V (continued)

Symbol	Parameter	Conditions	f_{HCLK}	All peripherals enabled				All peripherals disabled				Unit
				Typ	Max @ T_A(1)			Typ	Max @ T_A(1)			
					25 °C	85 °C	105 °C		25 °C	85 °C	105 °C	
I_{DD}	Supply current in Sleep mode	HSE bypass, PLL on	48 MHz	14.0	15.3(2)	15.3	16.0(2)	2.8	3.0(2)	3.0	3.2(2)	mA
			32 MHz	9.5	10.2	10.2	10.7	2.0	2.1	2.1	2.3	
			24 MHz	7.3	7.8	7.8	8.3	1.5	1.7	1.7	1.9	
		HSE bypass, PLL off	8 MHz	2.6	2.9	2.9	3.0	0.6	0.8	0.8	0.8	
			1 MHz	0.4	0.6	0.6	0.6	0.2	0.4	0.4	0.4	
		HSI clock, PLL on	48 MHz	14.0	15.3	15.3	16.0	3.8	4.0	4.1	4.2	
			32 MHz	9.5	10.2	10.2	10.7	2.6	2.7	2.8	2.8	
			24 MHz	7.3	7.8	7.8	8.3	2.0	2.1	2.1	2.1	
		HSI clock, PLL off	8 MHz	2.6	2.9	2.9	3.0	0.6	0.8	0.8	0.8	

1. Data based on characterization results, not tested in production unless otherwise specified.
2. Data based on characterization results and tested in production (using one common test limit for sum of I_{DD} and I_{DDA}).

Table 26. Typical and maximum current consumption from the V_{DDA} supply

Symbol	Parameter	Conditions (1)	f_{HCLK}	V_{DDA} = 2.4 V				V_{DDA} = 3.6 V				Unit
				Typ	Max @ T_A(2)			Typ	Max @ T_A(2)			
					25 °C	85 °C	105 °C		25 °C	85 °C	105 °C	
I_{DDA}	Supply current in Run or Sleep mode, code executing from Flash memory or RAM	HSE bypass, PLL on	48 MHz	150	170(3)	178	182(3)	164	183(3)	195	198(3)	µA
			32 MHz	104	121	126	128	113	129	135	138	
			24 MHz	82	96	100	103	88	102	106	108	
		HSE bypass, PLL off	8 MHz	2.0	2.7	3.1	3.3	3.5	3.8	4.1	4.4	
			1 MHz	2.0	2.7	3.1	3.3	3.5	3.8	4.1	4.4	
		HSI clock, PLL on	48 MHz	220	240	248	252	244	263	275	278	
			32 MHz	174	191	196	198	193	209	215	218	
			24 MHz	152	167	173	174	168	183	190	192	
		HSI clock, PLL off	8 MHz	72	79	82	83	83.5	91	94	95	

1. Current consumption from the V_{DDA} supply is independent of whether the digital peripherals are enabled or disabled, being in Run or Sleep mode or executing from Flash memory or RAM. Furthermore, when the PLL is off, I_{DDA} is independent of clock frequencies.
2. Data based on characterization results, not tested in production unless otherwise specified.
3. Data based on characterization results and tested in production (using one common test limit for sum of I_{DD} and I_{DDA}).

Table 27. Typical and maximum current consumption in Stop and Standby modes

Sym-bol	Para-meter	Conditions		Typ @V_{DD} (V_{DD} = V_{DDA})						Max(1)			Unit
				2.0 V	2.4 V	2.7 V	3.0 V	3.3 V	3.6 V	T_A = 25 °C	T_A = 85 °C	T_A = 105 °C	
I_{DD}	Supply current in Stop mode	Regulator in run mode, all oscillators OFF		15	15.1	15.3	15.5	15.7	16	(2)		(2)	µA
		Regulator in low-power mode, all oscillators OFF		3.2	3.3	3.4	3.5	3.7	4	(2)		(2)	
	Supply current in Standby mode	LSI ON and IWDG ON		0.8	1.0	1.1	1.2	1.4	1.5	-	-	-	
		LSI OFF and IWDG OFF		0.7	0.8	0.9	1.0	1.1	1.3	2(2)	2.5	3(2)	
I_{DDA}	Supply current in Stop mode	V_{DDA} monitoring ON	Regulator in run mode, all oscillators OFF	1.9	2	2.2	2.3	2.5	2.6	3.5(2)	3.5	4.5(2)	
			Regulator in low-power mode, all oscillators OFF	1.9	2	2.2	2.3	2.5	2.6	3.5(2)	3.5	4.5(2)	
	Supply current in Standby mode		LSI ON and IWDG ON	2.3	2.5	2.7	2.9	3.1	3.3	-	-	-	
			LSI OFF and IWDG OFF	1.8	1.9	2	2.2	2.3	2.5	3.5(2)	3.5	4.5(2)	
	Supply current in Stop mode	V_{DDA} monitoring OFF	Regulator in run mode, all oscillators OFF	1.1	1.2	1.2	1.2	1.3	1.4	-	-	-	
			Regulator in low-power mode, all oscillators OFF	1.1	1.2	1.2	1.2	1.3	1.4	-	-	-	
	Supply current in Standby mode		LSI ON and IWDG ON	1.5	1.6	1.7	1.8	1.9	2.0	-	-	-	
			LSI OFF and IWDG OFF	1	1.0	1.1	1.1	1.2	1.2	-	-	-	

1. Data based on characterization results, not tested in production unless otherwise specified.
2. Data based on characterization results and tested in production (using one common test limit for sum of I_{DD} and I_{DDA}).

Table 28. Typical and maximum current consumption from the V_{BAT} supply

Symbol	Parameter	Conditions	Typ @ V_{BAT}						Max(1)			Unit
			1.65 V	1.8 V	2.4 V	2.7 V	3.3 V	3.6 V	T_A = 25 °C	T_A = 85 °C	T_A = 105 °C	
I_{DD_VBAT}	RTC domain supply current	LSE & RTC ON; “Xtal mode”: lower driving capability; LSEDRV[1:0] = '00'	0.5	0.5	0.6	0.7	0.8	0.9	1.0	1.3	1.7	µA
		LSE & RTC ON; “Xtal mode” higher driving capability; LSEDRV[1:0] = '11'	0.8	0.8	0.9	1.0	1.1	1.2	1.3	1.6	2.1	

1. Data based on characterization results, not tested in production.

Typical current consumption

The MCU is placed under the following conditions:

- $V_{DD} = V_{DDA} = 3.3$ V
- All I/O pins are in analog input configuration
- The Flash memory access time is adjusted to f_{HCLK} frequency:
  - 0 wait state and Prefetch OFF from 0 to 24 MHz
  - 1 wait state and Prefetch ON above 24 MHz
- When the peripherals are enabled, $f_{PCLK} = f_{HCLK}$
- PLL is used for frequencies greater than 8 MHz
- AHB prescaler of 2, 4, 8 and 16 is used for the frequencies 4 MHz, 2 MHz, 1 MHz and 500 kHz respectively

Table 29. Typical current consumption, code executing from Flash memory, running from HSE 8 MHz crystal

Symbol	Parameter	f_{HCLK}	Typical consumption in Run mode		Typical consumption in Sleep mode		Unit
			Peripherals enabled	Peripherals disabled	Peripherals enabled	Peripherals disabled	
I_{DD}	Current consumption from V_{DD} supply	48 MHz	23.2	13.3	13.2	3.1	mA
		36 MHz	17.6	10.3	10.1	2.6	
		32 MHz	15.6	9.3	9.0	2.4	
		24 MHz	12.1	7.4	7.0	2.0	
		16 MHz	8.4	5.1	5.0	1.6	
		8 MHz	4.5	3.0	2.8	1.1	
		4 MHz	2.8	2.0	2.0	1.1	
		2 MHz	1.9	1.5	1.5	1.0	
		1 MHz	1.5	1.3	1.3	1.0	
		500 kHz	1.2	1.2	1.1	1.0	
I_{DDA}	Current consumption from V_{DDA} supply	48 MHz	151				µA
		36 MHz	113				
		32 MHz	101				
		24 MHz	79				
		16 MHz	57				
		8 MHz	2.2				
		4 MHz	2.2				
		2 MHz	2.2				
		1 MHz	2.2				
		500 kHz	2.2				

I/O system current consumption

The current consumption of the I/O system has two components: static and dynamic.

I/O static current consumption

All the I/Os used as inputs with pull-up generate current consumption when the pin is externally held low. The value of this current consumption can be simply computed by using the pull-up/pull-down resistors values given in *Table 48: I/O static characteristics*.

For the output pins, any external pull-down or external load must also be considered to estimate the current consumption.

Additional I/O current consumption is due to I/Os configured as inputs if an intermediate voltage level is externally applied. This current consumption is caused by the input Schmitt

trigger circuits used to discriminate the input value. Unless this specific configuration is required by the application, this supply current consumption can be avoided by configuring these I/Os in analog mode. This is notably the case of ADC input pins which should be configured as analog inputs.

Caution: Any floating input pin can also settle to an intermediate voltage level or switch inadvertently, as a result of external electromagnetic noise. To avoid current consumption related to floating pins, they must either be configured in analog mode, or forced internally to a definite digital value. This can be done either by using pull-up/down resistors or by configuring the pins in output mode.

I/O dynamic current consumption

In addition to the internal peripheral current consumption measured previously (see *Table 31: Peripheral current consumption*), the I/Os used by an application also contribute to the current consumption. When an I/O pin switches, it uses the current from the I/O supply voltage to supply the I/O pin circuitry and to charge/discharge the capacitive load (internal or external) connected to the pin:

$$I_{SW} = V_{DDIOx} \times f_{SW} \times C$$

where

I_{SW} is the current sunk by a switching I/O to charge/discharge the capacitive load

V_{DDIOx} is the I/O supply voltage

f_{SW} is the I/O switching frequency

C is the total capacitance seen by the I/O pin: $C = C_{INT} + C_{EXT} + C_S$

C_S is the PCB board capacitance including the pad pin.

The test pin is configured in push-pull output mode and is toggled by software at a fixed frequency.

Table 30. Switching output I/O current consumption

Symbol	Parameter	Conditions[1]	I/O toggling frequency (f_{SW})	Typ	Unit
I_{SW}	I/O current consumption	V_{DDIOx} = 3.3 V C =C_{INT}	4 MHz	0.07	mA
			8 MHz	0.15	
			16 MHz	0.31	
			24 MHz	0.53	
			48 MHz	0.92	
		V_{DDIOx} = 3.3 V C_{EXT} = 0 pF C = C_{INT} + C_{EXT}+ C_S	4 MHz	0.18	
			8 MHz	0.37	
			16 MHz	0.76	
			24 MHz	1.39	
			48 MHz	2.188	
		V_{DDIOx} = 3.3 V C_{EXT} = 10 pF C = C_{INT} + C_{EXT}+ C_S	4 MHz	0.32	
			8 MHz	0.64	
			16 MHz	1.25	
			24 MHz	2.23	
			48 MHz	4.442	
		V_{DDIOx} = 3.3 V C_{EXT} = 22 pF C = C_{INT} + C_{EXT}+ C_S	4 MHz	0.49	
			8 MHz	0.94	
			16 MHz	2.38	
			24 MHz	3.99	
		V_{DDIOx} = 3.3 V C_{EXT} = 33 pF C = C_{INT} + C_{EXT}+ C_S	4 MHz	0.64	
			8 MHz	1.25	
			16 MHz	3.24	
			24 MHz	5.02	
		V_{DDIOx} = 3.3 V C_{EXT} = 47 pF C = C_{INT} + C_{EXT}+ C_S C = C_{int}	4 MHz	0.81	
			8 MHz	1.7	
			16 MHz	3.67	
		V_{DDIOx} = 2.4 V C_{EXT} = 47 pF C = C_{INT} + C_{EXT}+ C_S C = C_{int}	4 MHz	0.66	
			8 MHz	1.43	
			16 MHz	2.45	
			24 MHz	4.97	

1. C_S = 7 pF (estimated value).

On-chip peripheral current consumption

The current consumption of the on-chip peripherals is given in *Table 31*. The MCU is placed under the following conditions:

- All I/O pins are in analog mode
- All peripherals are disabled unless otherwise mentioned
- The given value is calculated by measuring the current consumption
  - with all peripherals clocked off
  - with only one peripheral clocked on
- Ambient operating temperature and supply voltage conditions summarized in *Table 17: Voltage characteristics*

Table 31. Peripheral current consumption

Peripheral		Typical consumption at 25 °C	Unit
AHB	BusMatrix(1)	5	µA/MHz
	DMA1	7	
	SRAM	1	
	Flash memory interface	14	
	CRC	2	
	GPIOA	9	
	GPIOB	12	
	GPIOC	2	
	GPIOD	1	
	GPIOF	1	
	TSC	6	
	All AHB peripherals	**55**	

Table 31. Peripheral current consumption (continued)

Peripheral		Typical consumption at 25 °C	Unit
APB	APB-Bridge(2)	3	µA/MHz
	SYSCFG	3	
	ADC(3)	5	
	TIM1	17	
	SPI1	10	
	USART1	19	
	TIM15	11	
	TIM16	8	
	TIM17	8	
	DBG (MCU Debug Support)	0.5	
	TIM2	17	
	TIM3	13	
	TIM6	3	
	TIM14	6	
	WWDG	1	
	SPI2	7	
	USART2	7	
	I2C1	4	
	I2C2	5	
	DAC	2	
	PWR	1	
	CEC	2	
	All APB peripherals	**149**	

1. The BusMatrix automatically is active when at least one master is ON (CPU or DMA1)
2. The APBx Bridge is automatically active when at least one peripheral is ON on the same Bus.
3. The power consumption of the analog part (I_{DDA}) of peripherals such as ADC is not included. Refer to the tables of characteristics in the subsequent sections.

6.3.6 Wakeup time from low-power mode

The wakeup times given in *Table 32* are the latency between the event and the execution of the first user instruction. The device goes in low-power mode after the WFE (Wait For Event) instruction, in the case of a WFI (Wait For Interruption) instruction, 16 CPU cycles must be added to the following timings due to the interrupt latency in the Cortex M0 architecture.

The SYSCLK clock source setting is kept unchanged after wakeup from Sleep mode. During wakeup from Stop or Standby mode, SYSCLK takes the default setting: HSI 8 MHz.

The wakeup source from Sleep and Stop mode is an EXTI line configured in event mode. The wakeup source from Standby mode is the WKUP1 pin (PA0).

All timings are derived from tests performed under the ambient temperature and supply voltage conditions summarized in *Table 20: General operating conditions*.

Table 32. Low-power mode wakeup timings

Symbol	Parameter	Conditions	Typ @V_{DD} = V_{DDA}					Max	Unit
			= 2.0 V	= 2.4 V	= 2.7 V	= 3 V	= 3.3 V		
t_{WUSTOP}	Wakeup from Stop mode	Regulator in run mode	3.2	3.1	2.9	2.9	2.8	5	µs
		Regulator in low power mode	7.0	5.8	5.2	4.9	4.6	9	
$t_{WUSTANDBY}$	Wakeup from Standby mode	-	60.4	55.6	53.5	52	51	-	
$t_{WUSLEEP}$	Wakeup from Sleep mode	-	4 SYSCLK cycles					-	

6.3.7 External clock source characteristics

High-speed external user clock generated from an external source

In bypass mode the HSE oscillator is switched off and the input pin is a standard GPIO.

The external clock signal has to respect the I/O characteristics in *Section 6.3.14*. However, the recommended clock input waveform is shown in *Figure 15: High-speed external clock source AC timing diagram*.

Table 33. High-speed external user clock characteristics

Symbol	Parameter(1)	Min	Typ	Max	Unit
f_{HSE_ext}	User external clock source frequency	-	8	32	MHz
V_{HSEH}	OSC_IN input pin high level voltage	0.7 V_{DDIOx}	-	V_{DDIOx}	V
V_{HSEL}	OSC_IN input pin low level voltage	V_{SS}	-	0.3 V_{DDIOx}	
$t_{w(HSEH)}$ $t_{w(HSEL)}$	OSC_IN high or low time	15	-	-	ns
$t_{r(HSE)}$ $t_{f(HSE)}$	OSC_IN rise or fall time	-	-	20	

1. Guaranteed by design, not tested in production.

Figure 15. High-speed external clock source AC timing diagram

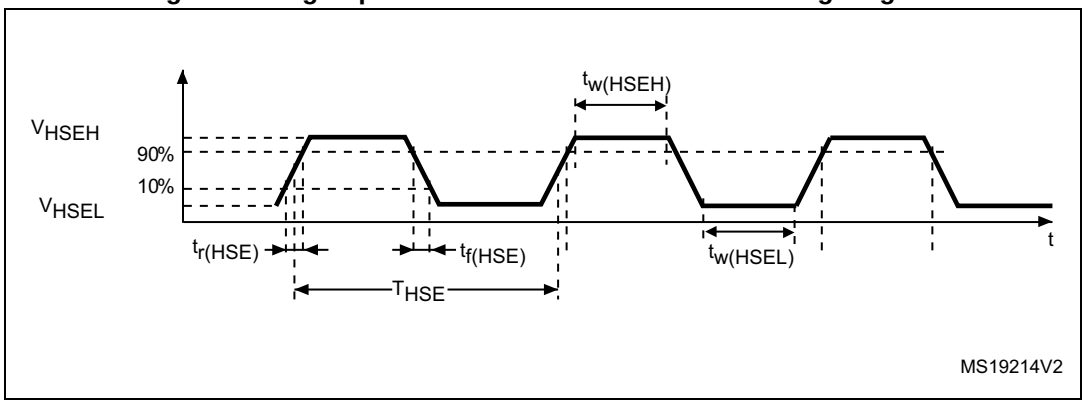

Low-speed external user clock generated from an external source

In bypass mode the LSE oscillator is switched off and the input pin is a standard GPIO.

The external clock signal has to respect the I/O characteristics in *Section 6.3.14*. However, the recommended clock input waveform is shown in *Figure 16*.

Table 34. Low-speed external user clock characteristics

Symbol	Parameter(1)	Min	Typ	Max	Unit
f_{LSE_ext}	User external clock source frequency	-	32.768	1000	kHz
V_{LSEH}	OSC32_IN input pin high level voltage	0.7 V_{DDIOx}	-	V_{DDIOx}	V
V_{LSEL}	OSC32_IN input pin low level voltage	V_{SS}	-	0.3 V_{DDIOx}	
$t_{w(LSEH)}$ $t_{w(LSEL)}$	OSC32_IN high or low time	450	-	-	ns
$t_{r(LSE)}$ $t_{f(LSE)}$	OSC32_IN rise or fall time	-	-	50	

1. Guaranteed by design, not tested in production.

Figure 16. Low-speed external clock source AC timing diagram

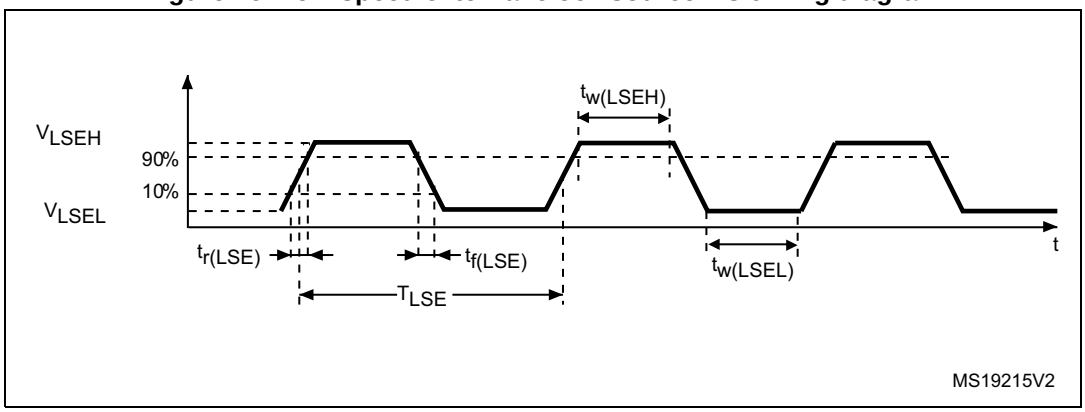

High-speed external clock generated from a crystal/ceramic resonator

The high-speed external (HSE) clock can be supplied with a 4 to 32 MHz crystal/ceramic resonator oscillator. All the information given in this paragraph are based on design simulation results obtained with typical external components specified in *Table 35*. In the application, the resonator and the load capacitors have to be placed as close as possible to the oscillator pins in order to minimize output distortion and startup stabilization time. Refer to the crystal resonator manufacturer for more details on the resonator characteristics (frequency, package, accuracy).

Table 35. HSE oscillator characteristics

Symbol	Parameter	Conditions(1)	Min(2)	Typ	Max(2)	Unit
f_{OSC_IN}	Oscillator frequency	-	4	8	32	MHz
R_F	Feedback resistor	-	-	200	-	kΩ
I_{DD}	HSE current consumption	During startup(3)	-	-	8.5	mA
		V_{DD} = 3.3 V, Rm = 30 Ω, CL = 10 pF@8 MHz	-	0.4	-	
		V_{DD} = 3.3 V, Rm = 45 Ω, CL = 10 pF@8 MHz	-	0.5	-	
		V_{DD} = 3.3 V, Rm = 30 Ω, CL = 5 pF@32 MHz	-	0.8	-	
		V_{DD} = 3.3 V, Rm = 30 Ω, CL = 10 pF@32 MHz	-	1	-	
		V_{DD} = 3.3 V, Rm = 30 Ω, CL = 20 pF@32 MHz	-	1.5	-	
g_m	Oscillator transconductance	Startup	10	-	-	mA/V
$t_{SU(HSE)}$(4)	Startup time	V_{DD} is stabilized	-	2	-	ms

1. Resonator characteristics given by the crystal/ceramic resonator manufacturer.
2. Guaranteed by design, not tested in production.
3. This consumption level occurs during the first 2/3 of the $t_{SU(HSE)}$ startup time
4. $t_{SU(HSE)}$ is the startup time measured from the moment it is enabled (by software) to a stabilized 8 MHz oscillation is reached. This value is measured for a standard crystal resonator and it can vary significantly with the crystal manufacturer

For C_{L1} and C_{L2}, it is recommended to use high-quality external ceramic capacitors in the 5 pF to 20 pF range (Typ.), designed for high-frequency applications, and selected to match the requirements of the crystal or resonator (see *Figure 17*). C_{L1} and C_{L2} are usually the same size. The crystal manufacturer typically specifies a load capacitance which is the series combination of C_{L1} and C_{L2}. PCB and MCU pin capacitance must be included (10 pF can be used as a rough estimate of the combined pin and board capacitance) when sizing C_{L1} and C_{L2}.

Note: For information on selecting the crystal, refer to the application note AN2867 “Oscillator design guide for ST microcontrollers” available from the ST website www.st.com.

Figure 17. Typical application with an 8 MHz crystal

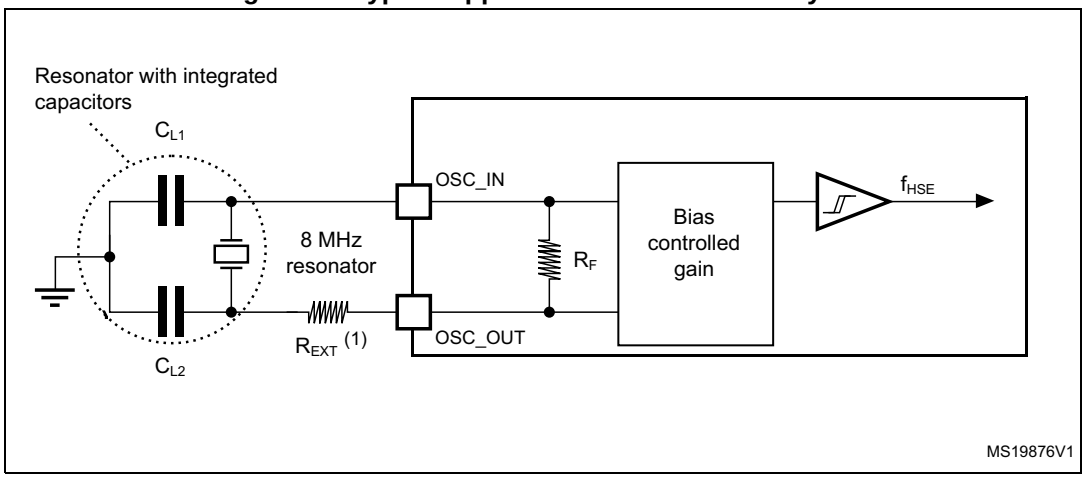

1. R_{EXT} value depends on the crystal characteristics.

Low-speed external clock generated from a crystal resonator

The low-speed external (LSE) clock can be supplied with a 32.768 kHz crystal resonator oscillator. All the information given in this paragraph are based on design simulation results obtained with typical external components specified in *Table 36*. In the application, the resonator and the load capacitors have to be placed as close as possible to the oscillator pins in order to minimize output distortion and startup stabilization time. Refer to the crystal resonator manufacturer for more details on the resonator characteristics (frequency, package, accuracy).

Table 36. LSE oscillator characteristics (f_{LSE} = 32.768 kHz)

Symbol	Parameter	Conditions(1)	Min(2)	Typ	Max(2)	Unit
I_{DD}	LSE current consumption	low drive capability	-	0.5	0.9	µA
		medium-low drive capability	-	-	1	
		medium-high drive capability	-	-	1.3	
		high drive capability	-	-	1.6	
g_m	Oscillator transconductance	low drive capability	5	-	-	µA/V
		medium-low drive capability	8	-	-	
		medium-high drive capability	15	-	-	
		high drive capability	25	-	-	
$t_{SU(LSE)}$(3)	Startup time	V_{DDIOx} is stabilized	-	2	-	s

1. Refer to the note and caution paragraphs below the table, and to the application note AN2867 “Oscillator design guide for ST microcontrollers”.
2. Guaranteed by design, not tested in production.
3. $t_{SU(LSE)}$ is the startup time measured from the moment it is enabled (by software) to a stabilized 32.768 kHz oscillation is reached. This value is measured for a standard crystal and it can vary significantly with the crystal manufacturer

Note: For information on selecting the crystal, refer to the application note AN2867 "Oscillator design guide for ST microcontrollers" available from the ST website www.st.com.

Figure 18. Typical application with a 32.768 kHz crystal

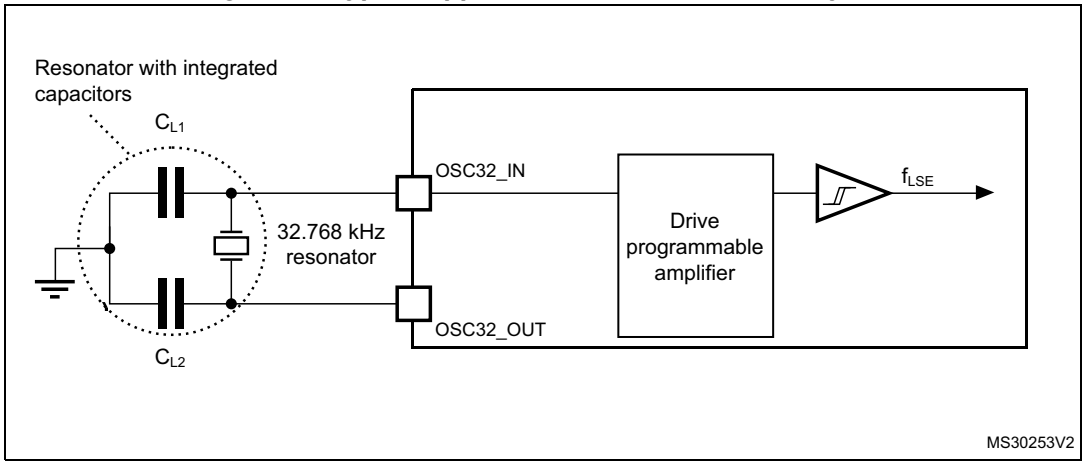

Note: An external resistor is not required between OSC32_IN and OSC32_OUT and it is forbidden to add one.

6.3.8 Internal clock source characteristics

The parameters given in *Table 37* are derived from tests performed under ambient temperature and supply voltage conditions summarized in *Table 20: General operating conditions*. The provided curves are characterization results, not tested in production.

High-speed internal (HSI) RC oscillator

Table 37. HSI oscillator characteristics(1)

Symbol	Parameter	Conditions	Min	Typ	Max	Unit
f_{HSI}	Frequency	-	-	8	-	MHz
TRIM	HSI user trimming step	-	-	-	1(2)	%
$DuCy_{(HSI)}$	Duty cycle	-	45(2)	-	55(2)	%
ACC_{HSI}	Accuracy of the HSI oscillator	T_A = -40 to 105°C	-2.8(3)	-	3.8(3)	%
		T_A = -10 to 85°C	-1.9(3)	-	2.3(3)	
		T_A = 0 to 85°C	-1.9(3)	-	2(3)	
		T_A = 0 to 70°C	-1.3(3)	-	2(3)	
		T_A = 0 to 55°C	-1(3)	-	2(3)	
		T_A = 25°C(4)	-1	-	1	
$t_{su(HSI)}$	HSI oscillator startup time	-	1(2)	-	2(2)	µs
$I_{DDA(HSI)}$	HSI oscillator power consumption	-	-	80	100(2)	µA

1. V_{DDA} = 3.3 V, T_A = -40 to 105°C unless otherwise specified.
2. Guaranteed by design, not tested in production.
3. Data based on characterization results, not tested in production.
4. Factory calibrated, parts not soldered.

Figure 19. HSI oscillator accuracy characterization results for soldered parts

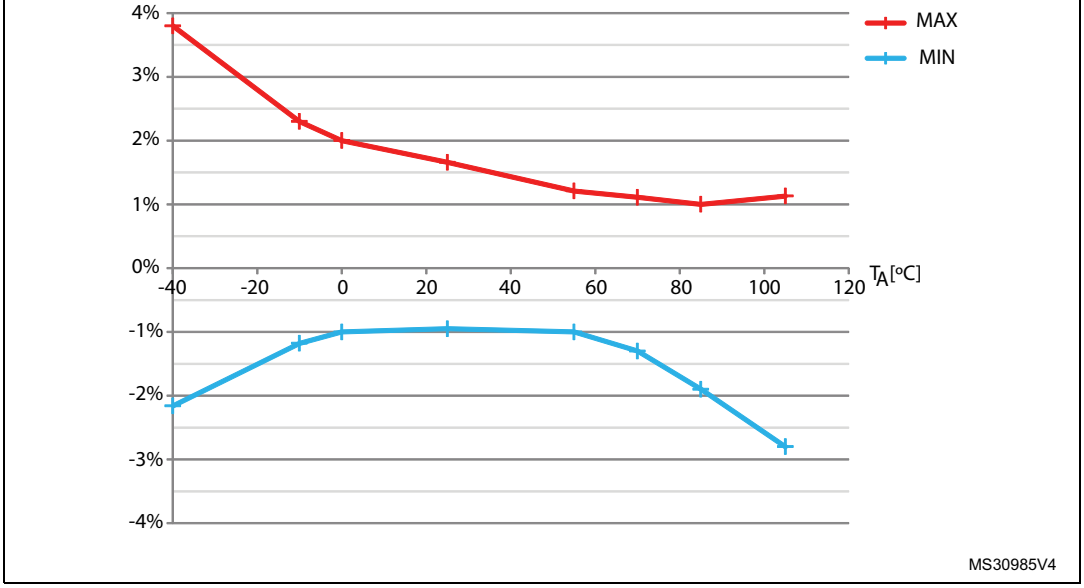

High-speed internal 14 MHz (HSI14) RC oscillator (dedicated to ADC)

Table 38. HSI14 oscillator characteristics(1)

Symbol	Parameter	Conditions	Min	Typ	Max	Unit
f_{HSI14}	Frequency	-	-	14	-	MHz
TRIM	HSI14 user-trimming step	-	-	-	1(2)	%
$DuCy_{(HSI14)}$	Duty cycle	-	45(2)	-	55(2)	%
ACC_{HSI14}	Accuracy of the HSI14 oscillator (factory calibrated)	T_A = –40 to 105 °C	–4.2(3)	-	5.1(3)	%
		T_A = –10 to 85 °C	–3.2(3)	-	3.1(3)	%
		T_A = 0 to 70 °C	–2.5(3)	-	2.3(3)	%
		T_A = 25 °C	–1	-	1	%
$t_{su(HSI14)}$	HSI14 oscillator startup time	-	1(2)	-	2(2)	µs
$I_{DDA(HSI14)}$	HSI14 oscillator power consumption	-	-	100	150(2)	µA

1. V_{DDA} = 3.3 V, T_A = –40 to 105 °C unless otherwise specified.
2. Guaranteed by design, not tested in production.
3. Data based on characterization results, not tested in production.

Figure 20. HSI14 oscillator accuracy characterization results

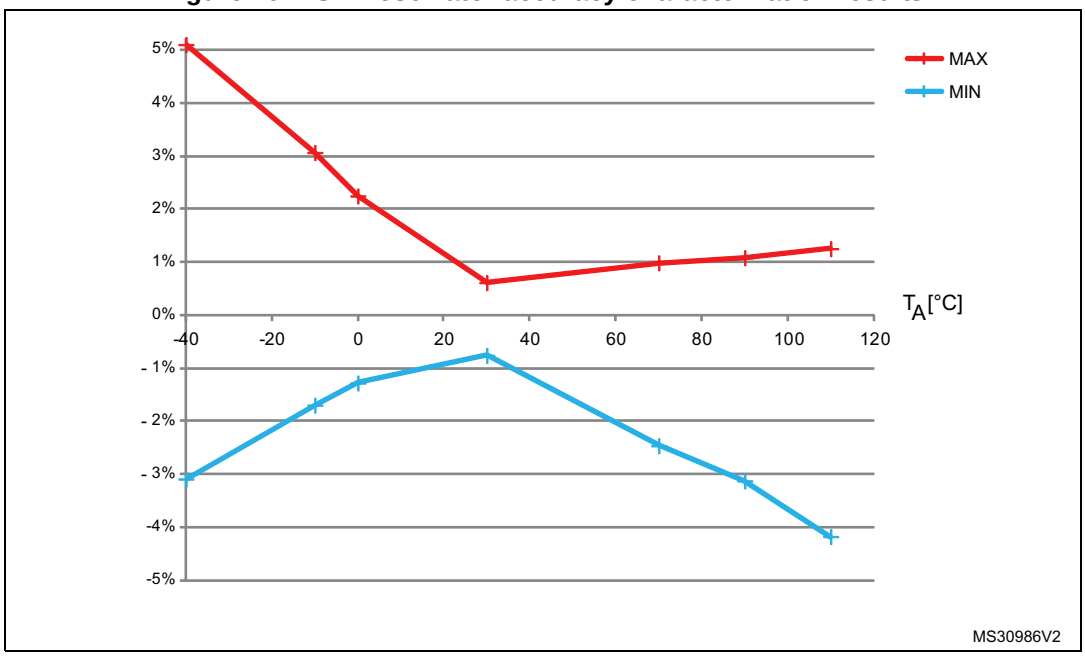

Low-speed internal (LSI) RC oscillator

Table 39. LSI oscillator characteristics(1)

Symbol	Parameter	Min	Typ	Max	Unit
f_{LSI}	Frequency	30	40	50	kHz
$t_{su(LSI)}$(2)	LSI oscillator startup time	-	-	85	µs
$I_{DDA(LSI)}$(2)	LSI oscillator power consumption	-	0.75	1.2	µA

1. V_{DDA} = 3.3 V, T_A = –40 to 105 °C unless otherwise specified.
2. Guaranteed by design, not tested in production.

6.3.9 PLL characteristics

The parameters given in *Table 40* are derived from tests performed under ambient temperature and supply voltage conditions summarized in *Table 20: General operating conditions*.

Table 40. PLL characteristics

Symbol	Parameter	Value			Unit
		Min	Typ	Max	
f_{PLL_IN}	PLL input clock(1)	1(2)	8.0	24(2)	MHz
	PLL input clock duty cycle	40(2)	-	60(2)	%
f_{PLL_OUT}	PLL multiplier output clock	16(2)	-	48	MHz
t_{LOCK}	PLL lock time	-	-	200(2)	µs
$Jitter_{PLL}$	Cycle-to-cycle jitter	-	-	300(2)	ps

1. Take care to use the appropriate multiplier factors to obtain PLL input clock values compatible with the range defined by f_{PLL_OUT}.
2. Guaranteed by design, not tested in production.

6.3.10 Memory characteristics

Flash memory

The characteristics are given at T_A = –40 to 105 °C unless otherwise specified.

Table 41. Flash memory characteristics

Symbol	Parameter	Conditions	Min	Typ	Max(1)	Unit
t_{prog}	16-bit programming time	T_A = - 40 to +105 °C	40	53.5	60	µs
t_{ERASE}	Page (1 KB) erase time	T_A = - 40 to +105 °C	20	-	40	ms
t_{ME}	Mass erase time	T_A = - 40 to +105 °C	20	-	40	ms
I_{DD}	Supply current	Write mode	-	-	10	mA
		Erase mode	-	-	12	mA

1. Guaranteed by design, not tested in production.

Table 42. Flash memory endurance and data retention

Symbol	Parameter	Conditions	Min(1)	Unit
N_{END}	Endurance	T_A = –40 to +105 °C	10	kcycle
t_{RET}	Data retention	1 kcycle(2) at T_A = 85 °C	30	Year
		1 kcycle(2) at T_A = 105 °C	10	
		10 kcycle(2) at T_A = 55 °C	20	

1. Data based on characterization results, not tested in production.
2. Cycling performed over the whole temperature range.

6.3.11 EMC characteristics

Susceptibility tests are performed on a sample basis during device characterization.

Functional EMS (electromagnetic susceptibility)

While a simple application is executed on the device (toggling 2 LEDs through I/O ports). the device is stressed by two electromagnetic events until a failure occurs. The failure is indicated by the LEDs:

- **Electrostatic discharge (ESD)** (positive and negative) is applied to all device pins until a functional disturbance occurs. This test is compliant with the IEC 61000-4-2 standard.
- **FTB**: A Burst of Fast Transient voltage (positive and negative) is applied to V_{DD} and V_{SS} through a 100 pF capacitor, until a functional disturbance occurs. This test is compliant with the IEC 61000-4-4 standard.

A device reset allows normal operations to be resumed.

The test results are given in *Table 43*. They are based on the EMS levels and classes defined in application note AN1709.

Table 43. EMS characteristics

Symbol	Parameter	Conditions	Level/ Class
V_{FESD}	Voltage limits to be applied on any I/O pin to induce a functional disturbance	V_{DD} = 3.3 V, LQFP64, T_A = +25 °C, f_{HCLK} = 48 MHz, conforming to IEC 61000-4-2	2B
V_{EFTB}	Fast transient voltage burst limits to be applied through 100 pF on V_{DD} and V_{SS} pins to induce a functional disturbance	V_{DD} = 3.3 V, LQFP64, T_A = +25°C, f_{HCLK} = 48 MHz, conforming to IEC 61000-4-4	4B

Designing hardened software to avoid noise problems

EMC characterization and optimization are performed at component level with a typical application environment and simplified MCU software. It should be noted that good EMC performance is highly dependent on the user application and the software in particular.

Therefore it is recommended that the user applies EMC software optimization and prequalification tests in relation with the EMC level requested for his application.

Software recommendations

The software flowchart must include the management of runaway conditions such as:

- Corrupted program counter
- Unexpected reset
- Critical Data corruption (for example control registers)

Prequalification trials

Most of the common failures (unexpected reset and program counter corruption) can be reproduced by manually forcing a low state on the NRST pin or the Oscillator pins for 1 second.

To complete these trials, ESD stress can be applied directly on the device, over the range of specification values. When unexpected behavior is detected, the software can be hardened to prevent unrecoverable errors occurring (see application note AN1015).

Electromagnetic Interference (EMI)

The electromagnetic field emitted by the device are monitored while a simple application is executed (toggling 2 LEDs through the I/O ports). This emission test is compliant with IEC 61967-2 standard which specifies the test board and the pin loading.

Table 44. EMI characteristics

Symbol	Parameter	Conditions	Monitored frequency band	Max vs. [f_{HSE}/f_{HCLK}]	Unit
				8/48 MHz	
S_{EMI}	Peak level	V_{DD} = 3.6 V, T_A = 25 °C, LQFP64 package compliant with IEC 61967-2	0.1 to 30 MHz	-3	dBµV
			30 to 130 MHz	28	
			130 MHz to 1 GHz	23	
			EMI Level	4	-

6.3.12 Electrical sensitivity characteristics

Based on three different tests (ESD, LU) using specific measurement methods, the device is stressed in order to determine its performance in terms of electrical sensitivity.

Electrostatic discharge (ESD)

Electrostatic discharges (a positive then a negative pulse separated by 1 second) are applied to the pins of each sample according to each pin combination. The sample size depends on the number of supply pins in the device (3 parts × (n+1) supply pins). This test conforms to the JESD22-A114/C101 standard.

Table 45. ESD absolute maximum ratings

Symbol	Ratings	Conditions	Packages	Class	Maximum value(1)	Unit
$V_{ESD(HBM)}$	Electrostatic discharge voltage (human body model)	T_A = +25 °C, conforming to JESD22-A114	All	2	2000	V
$V_{ESD(CDM)}$	Electrostatic discharge voltage (charge device model)	T_A = +25 °C, conforming to ANSI/ESD STM5.3.1	All	C3	250	V

1. Data based on characterization results, not tested in production.

Static latch-up

Two complementary static tests are required on six parts to assess the latch-up performance:

- A supply overvoltage is applied to each power supply pin.
- A current injection is applied to each input, output and configurable I/O pin.

These tests are compliant with EIA/JESD 78A IC latch-up standard.

Table 46. Electrical sensitivities

Symbol	Parameter	Conditions	Class
LU	Static latch-up class	T_A = +105 °C conforming to JESD78A	II level A

6.3.13 I/O current injection characteristics

As a general rule, current injection to the I/O pins, due to external voltage below V_{SS} or above V_{DDIOx} (for standard, 3.3 V-capable I/O pins) should be avoided during normal product operation. However, in order to give an indication of the robustness of the microcontroller in cases when abnormal injection accidentally happens, susceptibility tests are performed on a sample basis during device characterization.

Functional susceptibility to I/O current injection

While a simple application is executed on the device, the device is stressed by injecting current into the I/O pins programmed in floating input mode. While current is injected into the I/O pin, one at a time, the device is checked for functional failures.

The failure is indicated by an out of range parameter: ADC error above a certain limit (higher than 5 LSB TUE), out of conventional limits of induced leakage current on adjacent pins (out of the -5 µA/+0 µA range) or other functional failure (for example reset occurrence or oscillator frequency deviation).

The characterization results are given in *Table 47*.

Negative induced leakage current is caused by negative injection and positive induced leakage current is caused by positive injection.

Table 47. I/O current injection susceptibility

Symbol	Description	Functional susceptibility		Unit
		Negative injection	Positive injection	
I_{INJ}	Injected current on BOOT0	–0	NA	mA
	Injected current on PA10, PA12, PB4, PB5, PB10, PB15 and PD2 pins with induced leakage current on adjacent pins less than –10 µA	–5	NA	
	Injected current on all other FT and FTf pins	–5	NA	
	Injected current on PA6 and PC0	–0	+5	
	Injected current on all other TTa, TC and RST pins	–5	+5	

6.3.14 I/O port characteristics

General input/output characteristics

Unless otherwise specified, the parameters given in *Table 48* are derived from tests performed under the conditions summarized in *Table 20: General operating conditions*. All I/Os are designed as CMOS- and TTL-compliant (except BOOT0).

Table 48. I/O static characteristics

Symbol	Parameter	Conditions	Min	Typ	Max	Unit
V_{IL}	Low level input voltage	TC and TTa I/O	-	-	$0.3\ V_{DDIOx}+0.07$(1)	V
		FT and FTf I/O	-	-	$0.475\ V_{DDIOx}-0.2$(1)	
		BOOT0	-	-	$0.3\ V_{DDIOx}-0.3$(1)	
		All I/Os except BOOT0 pin	-	-	$0.3\ V_{DDIOx}$	
V_{IH}	High level input voltage	TC and TTa I/O	$0.445\ V_{DDIOx}+0.398$(1)	-	-	V
		FT and FTf I/O	$0.5\ V_{DDIOx}+0.2$(1)	-	-	
		BOOT0	$0.2\ V_{DDIOx}+0.95$(1)	-	-	
		All I/Os except BOOT0 pin	$0.7\ V_{DDIOx}$	-	-	
V_{hys}	Schmitt trigger hysteresis	TC and TTa I/O	-	200(1)	-	mV
		FT and FTf I/O	-	100(1)	-	
		BOOT0	-	300(1)	-	

Table 48. I/O static characteristics (continued)

Symbol	Parameter	Conditions	Min	Typ	Max	Unit
I_{lkg}	Input leakage current(2)	TC, FT and FTf I/O TTa in digital mode $V_{SS} \le V_{IN} \le V_{DDIOx}$	-	-	± 0.1	µA
		TTa in digital mode $V_{DDIOx} \le V_{IN} \le V_{DDA}$	-	-	1	
		TTa in analog mode $V_{SS} \le V_{IN} \le V_{DDA}$	-	-	± 0.2	
		FT and FTf I/O $V_{DDIOx} \le V_{IN} \le 5$ V	-	-	10	
R_{PU}	Weak pull-up equivalent resistor (3)	$V_{IN} = V_{SS}$	25	40	55	kΩ
R_{PD}	Weak pull-down equivalent resistor(3)	$V_{IN} = - V_{DDIOx}$	25	40	55	kΩ
C_{IO}	I/O pin capacitance	-	-	5	-	pF

1. Data based on design simulation only. Not tested in production.
2. The leakage could be higher than the maximum value, if negative current is injected on adjacent pins. Refer to *Table 47: I/O current injection susceptibility*.
3. Pull-up and pull-down resistors are designed with a true resistance in series with a switchable PMOS/NMOS. This PMOS/NMOS contribution to the series resistance is minimal (~10% order).

All I/Os are CMOS- and TTL-compliant (no software configuration required). Their characteristics cover more than the strict CMOS-technology or TTL parameters. The coverage of these requirements is shown in *Figure 21* for standard I/Os, and in *Figure 22* for 5 V-tolerant I/Os. The following curves are design simulation results, not tested in production.

Figure 21. TC and TTa I/O input characteristics

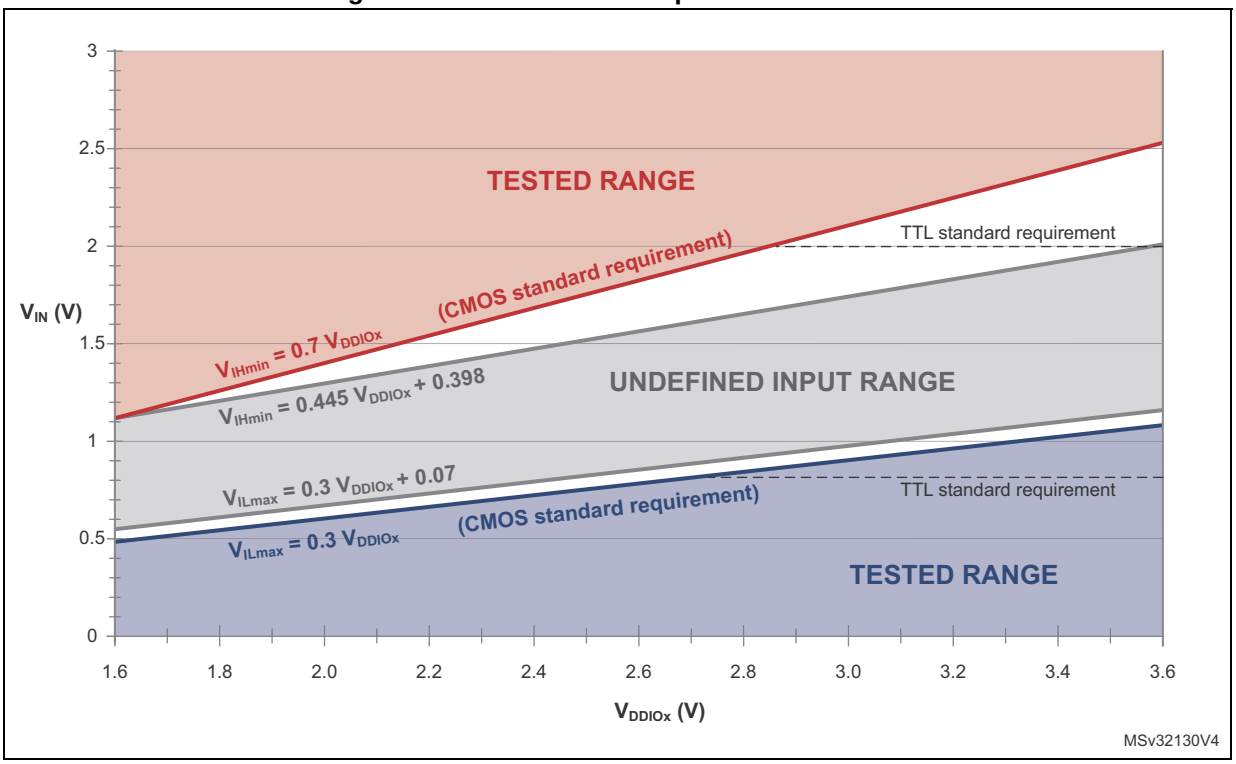

Figure 22. Five volt tolerant (FT and FTf) I/O input characteristics

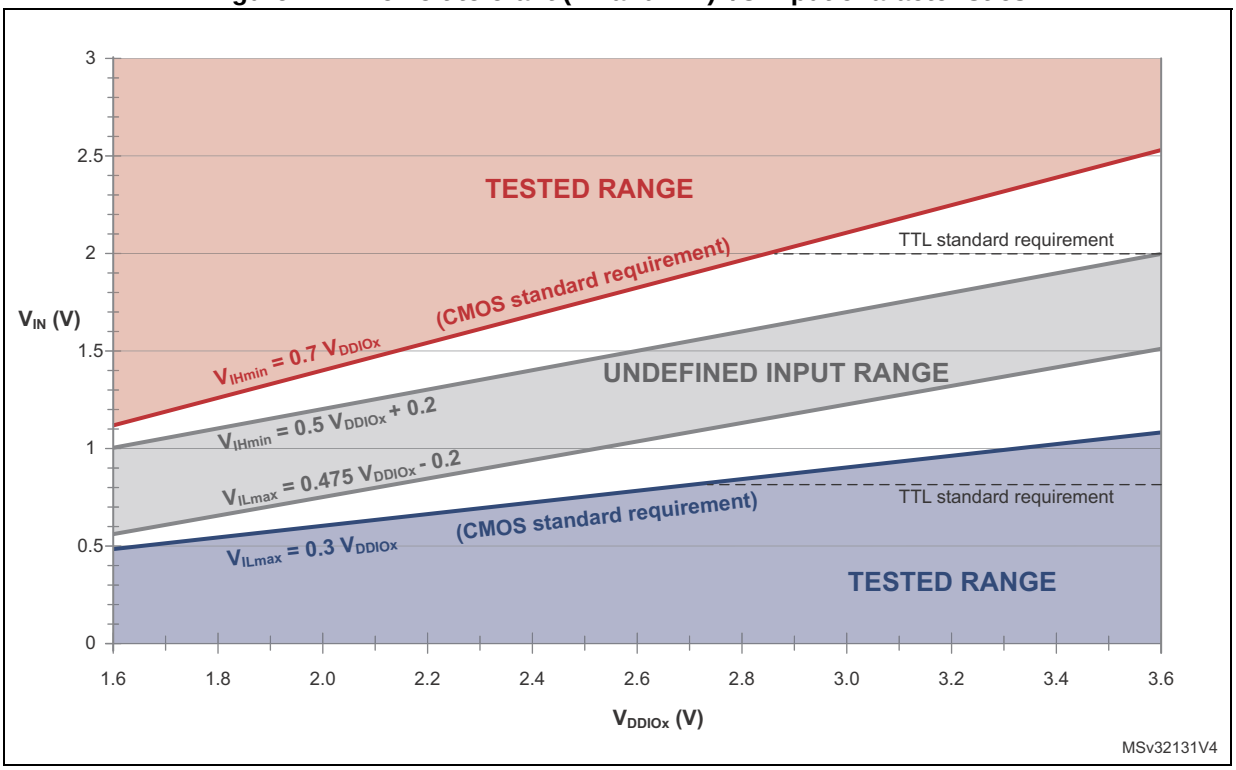

Output driving current

The GPIOs (general purpose input/outputs) can sink or source up to +/-8 mA, and sink or source up to +/- 20 mA (with a relaxed V_{OL}/V_{OH}).

In the user application, the number of I/O pins which can drive current must be limited to respect the absolute maximum rating specified in *Section 6.2*:

- The sum of the currents sourced by all the I/Os on V_{DDIOx}, plus the maximum consumption of the MCU sourced on V_{DD}, cannot exceed the absolute maximum rating ΣI_{VDD} (see *Table 17: Voltage characteristics*).
- The sum of the currents sunk by all the I/Os on V_{SS}, plus the maximum consumption of the MCU sunk on V_{SS}, cannot exceed the absolute maximum rating ΣI_{VSS} (see *Table 17: Voltage characteristics*).

Output voltage levels

Unless otherwise specified, the parameters given in the table below are derived from tests performed under the ambient temperature and supply voltage conditions summarized in *Table 20: General operating conditions*. All I/Os are CMOS- and TTL-compliant (FT, TTa or TC unless otherwise specified).

Table 49. Output voltage characteristics(1)

Symbol	Parameter	Conditions	Min	Max	Unit
V_{OL}	Output low level voltage for an I/O pin	CMOS port(2) $\|I_{IO}\|$ = 8 mA $V_{DDIOx} \geq 2.7$ V	-	0.4	V
V_{OH}	Output high level voltage for an I/O pin		V_{DDIOx}–0.4	-	
V_{OL}	Output low level voltage for an I/O pin	TTL port(2) $\|I_{IO}\|$ = 8 mA $V_{DDIOx} \geq 2.7$ V	-	0.4	V
V_{OH}	Output high level voltage for an I/O pin		2.4	-	
V_{OL}(3)	Output low level voltage for an I/O pin	$\|I_{IO}\|$ = 20 mA $V_{DDIOx} \geq 2.7$ V	-	1.3	V
V_{OH}(3)	Output high level voltage for an I/O pin		V_{DDIOx}–1.3	-	
V_{OL}(3)	Output low level voltage for an I/O pin	$\|I_{IO}\|$ = 6 mA	-	0.4	V
V_{OH}(3)	Output high level voltage for an I/O pin		V_{DDIOx}–0.4	-	
V_{OLFm+}(3)	Output low level voltage for an FTf I/O pin in Fm+ mode	$\|I_{IO}\|$ = 20 mA $V_{DDIOx} \geq 2.7$ V	-	0.4	V
		$\|I_{IO}\|$ = 10 mA	-	0.4	V

1. The I_{IO} current sourced or sunk by the device must always respect the absolute maximum rating specified in *Table 17: Voltage characteristics*, and the sum of the currents sourced or sunk by all the I/Os (I/O ports and control pins) must always respect the absolute maximum ratings ΣI_{IO}.
2. TTL and CMOS outputs are compatible with JEDEC standards JESD36 and JESD52.
3. Data based on characterization results. Not tested in production.

Input/output AC characteristics

The definition and values of input/output AC characteristics are given in *Figure 23* and *Table 50*, respectively. Unless otherwise specified, the parameters given are derived from tests performed under the ambient temperature and supply voltage conditions summarized in *Table 20: General operating conditions*.

Table 50. I/O AC characteristics(1)(2)

OSPEEDRy [1:0] value(1)	Symbol	Parameter	Conditions	Min	Max	Unit
x0	$f_{max(IO)out}$	Maximum frequency(3)	C_L = 50 pF	-	2	MHz
	$t_{f(IO)out}$	Output fall time		-	125	ns
	$t_{r(IO)out}$	Output rise time		-	125	
01	$f_{max(IO)out}$	Maximum frequency(3)	C_L = 50 pF	-	10	MHz
	$t_{f(IO)out}$	Output fall time		-	25	ns
	$t_{r(IO)out}$	Output rise time		-	25	
11	$f_{max(IO)out}$	Maximum frequency(3)	C_L = 30 pF, $V_{DDIOx} \geq$ 2.7 V	-	50	MHz
			C_L = 50 pF, $V_{DDIOx} \geq$ 2.7 V	-	30	
			C_L = 50 pF, V_{DDIOx} < 2.7 V	-	20	
	$t_{f(IO)out}$	Output fall time	C_L = 30 pF, $V_{DDIOx} \geq$ 2.7 V	-	5	ns
			C_L = 50 pF, $V_{DDIOx} \geq$ 2.7 V	-	8	
			C_L = 50 pF, V_{DDIOx} < 2.7 V	-	12	
	$t_{r(IO)out}$	Output rise time	C_L = 30 pF, $V_{DDIOx} \geq$ 2.7 V	-	5	
			C_L = 50 pF, $V_{DDIOx} \geq$ 2.7 V	-	8	
			C_L = 50 pF, V_{DDIOx} < 2.7 V	-	12	
Fm+ configuration (4)	$f_{max(IO)out}$	Maximum frequency(3)	C_L = 50 pF	-	2	MHz
	$t_{f(IO)out}$	Output fall time		-	12	ns
	$t_{r(IO)out}$	Output rise time		-	34	
-	t_{EXTIpw}	Pulse width of external signals detected by the EXTI controller	-	10	-	ns

1. The I/O speed is configured using the OSPEEDRx[1:0] bits. Refer to the STM32F0xxxx RM0091 reference manual for a description of GPIO Port configuration register.
2. Guaranteed by design, not tested in production.
3. The maximum frequency is defined in *Figure 23*.
4. When Fm+ configuration is set, the I/O speed control is bypassed. Refer to the STM32F0xxxx reference manual RM0091 for a detailed description of Fm+ I/O configuration.

Figure 23. I/O AC characteristics definition

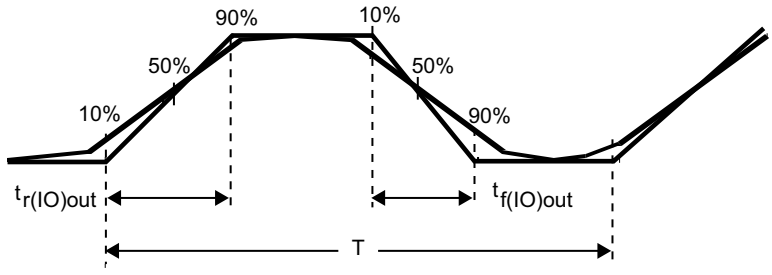

Maximum frequency is achieved if $(t_r + t_f) \leq \frac{2}{3}T$ and if the duty cycle is (45-55%)
when loaded by C_L (see the table *I/O AC characteristics definition*)

MS32132V3

6.3.15 NRST pin characteristics

The NRST pin input driver uses the CMOS technology. It is connected to a permanent pull-up resistor, R_{PU}.

Unless otherwise specified, the parameters given in the table below are derived from tests performed under the ambient temperature and supply voltage conditions summarized in *Table 20: General operating conditions*.

Table 51. NRST pin characteristics

Symbol	Parameter	Conditions	Min	Typ	Max	Unit
$V_{IL(NRST)}$	NRST input low level voltage	-	-	-	$0.3\ V_{DD}+0.07^{(1)}$	V
$V_{IH(NRST)}$	NRST input high level voltage	-	$0.445\ V_{DD}+0.398^{(1)}$	-	-	
$V_{hys(NRST)}$	NRST Schmitt trigger voltage hysteresis	-	-	200	-	mV
R_{PU}	Weak pull-up equivalent resistor(2)	$V_{IN} = V_{SS}$	25	40	55	kΩ
$V_{F(NRST)}$	NRST input filtered pulse	-	-	-	$100^{(1)}$	ns
$V_{NF(NRST)}$	NRST input not filtered pulse	$2.7 < V_{DD} < 3.6$	$300^{(3)}$	-	-	ns
		$2.0 < V_{DD} < 3.6$	$500^{(3)}$	-	-	

1. Data based on design simulation only. Not tested in production.
2. The pull-up is designed with a true resistance in series with a switchable PMOS. This PMOS contribution to the series resistance is minimal (~10% order).
3. Data based on design simulation only. Not tested in production.

Figure 24. Recommended NRST pin protection

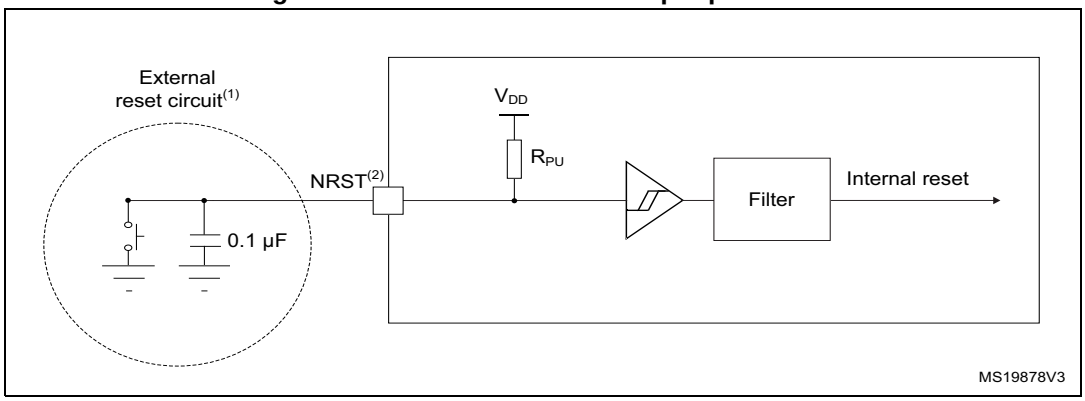

1. The external capacitor protects the device against parasitic resets.
2. The user must ensure that the level on the NRST pin can go below the $V_{IL(NRST)}$ max level specified in *Table 51: NRST pin characteristics*. Otherwise the reset will not be taken into account by the device.

6.3.16 12-bit ADC characteristics

Unless otherwise specified, the parameters given in *Table 52* are derived from tests performed under the conditions summarized in *Table 20: General operating conditions*.

Note: It is recommended to perform a calibration after each power-up.

Table 52. ADC characteristics

Symbol	Parameter	Conditions	Min	Typ	Max	Unit
V_{DDA}	Analog supply voltage for ADC ON	-	2.4	-	3.6	V
$I_{DDA\ (ADC)}$	Current consumption of the ADC(1)	V_{DDA} = 3.3 V	-	0.9	-	mA
f_{ADC}	ADC clock frequency	-	0.6	-	14	MHz
f_S(2)	Sampling rate	12-bit resolution	0.043	-	1	MHz
f_{TRIG}(2)	External trigger frequency	f_{ADC} = 14 MHz, 12-bit resolution	-	-	823	kHz
		12-bit resolution	-	-	17	$1/f_{ADC}$
V_{AIN}	Conversion voltage range	-	0	-	V_{DDA}	V
R_{AIN}(2)	External input impedance	See *Equation 1* and *Table 53* for details	-	-	50	kΩ
R_{ADC}(2)	Sampling switch resistance	-	-	-	1	kΩ
C_{ADC}(2)	Internal sample and hold capacitor	-	-	-	8	pF
t_{CAL}(2)(3)	Calibration time	f_{ADC} = 14 MHz	5.9			µs
		-	83			$1/f_{ADC}$

Table 52. ADC characteristics (continued)

Symbol	Parameter	Conditions	Min	Typ	Max	Unit
$W_{LATENCY}$(2)(4)	ADC_DR register ready latency	ADC clock = HSI14	1.5 ADC cycles + 2 f_{PCLK} cycles	-	1.5 ADC cycles + 3 f_{PCLK} cycles	-
		ADC clock = PCLK/2	-	4.5	-	f_{PCLK} cycle
		ADC clock = PCLK/4	-	8.5	-	f_{PCLK} cycle
t_{latr}(2)	Trigger conversion latency	$f_{ADC} = f_{PCLK}/2 = 14$ MHz	0.196			µs
		$f_{ADC} = f_{PCLK}/2$	5.5			$1/f_{PCLK}$
		$f_{ADC} = f_{PCLK}/4 = 12$ MHz	0.219			µs
		$f_{ADC} = f_{PCLK}/4$	10.5			$1/f_{PCLK}$
		$f_{ADC} = f_{HSI14} = 14$ MHz	0.179	-	0.250	µs
$Jitter_{ADC}$	ADC jitter on trigger conversion	$f_{ADC} = f_{HSI14}$	-	1	-	$1/f_{HSI14}$
t_S(2)	Sampling time	$f_{ADC} = 14$ MHz	0.107	-	17.1	µs
		-	1.5	-	239.5	$1/f_{ADC}$
t_{STAB}(2)	Stabilization time	-	14			$1/f_{ADC}$
t_{CONV}(2)	Total conversion time (including sampling time)	$f_{ADC} = 14$ MHz, 12-bit resolution	1	-	18	µs
		12-bit resolution	14 to 252 (t_S for sampling +12.5 for successive approximation)			$1/f_{ADC}$

1. During conversion of the sampled value (12.5 x ADC clock period), an additional consumption of 100 µA on I_{DDA} and 60 µA on I_{DD} should be taken into account.
2. Guaranteed by design, not tested in production.
3. Specified value includes only ADC timing. It does not include the latency of the register access.
4. This parameter specify latency for transfer of the conversion result to the ADC_DR register. EOC flag is set at this time.

Equation 1: R_{AIN} max formula

$$R_{AIN} < \frac{T_S}{f_{ADC} \times C_{ADC} \times \ln(2^{N+2})} - R_{ADC}$$

The formula above (*Equation 1*) is used to determine the maximum external impedance allowed for an error below 1/4 of LSB. Here N = 12 (from 12-bit resolution).

Table 53. R_{AIN} max for f_{ADC} = 14 MHz

T_s (cycles)	t_S (µs)	R_{AIN} max (kΩ)(1)
1.5	0.11	0.4
7.5	0.54	5.9
13.5	0.96	11.4

Table 53. R_{AIN} max for f_{ADC} = 14 MHz (continued)

T_s (cycles)	t_S (µs)	R_{AIN} max (kΩ)(1)
28.5	2.04	25.2
41.5	2.96	37.2
55.5	3.96	50
71.5	5.11	NA
239.5	17.1	NA

1. Guaranteed by design, not tested in production.

Table 54. ADC accuracy(1)(2)(3)

Symbol	Parameter	Test conditions	Typ	Max(4)	Unit
ET	Total unadjusted error	f_{PCLK} = 48 MHz, f_{ADC} = 14 MHz, R_{AIN} < 10 kΩ V_{DDA} = 3 V to 3.6 V T_A = 25 °C	±1.3	±2	LSB
EO	Offset error		±1	±1.5	
EG	Gain error		±0.5	±1.5	
ED	Differential linearity error		±0.7	±1	
EL	Integral linearity error		±0.8	±1.5	
ET	Total unadjusted error	f_{PCLK} = 48 MHz, f_{ADC} = 14 MHz, R_{AIN} < 10 kΩ V_{DDA} = 2.7 V to 3.6 V T_A = - 40 to 105 °C	±3.3	±4	LSB
EO	Offset error		±1.9	±2.8	
EG	Gain error		±2.8	±3	
ED	Differential linearity error		±0.7	±1.3	
EL	Integral linearity error		±1.2	±1.7	
ET	Total unadjusted error	f_{PCLK} = 48 MHz, f_{ADC} = 14 MHz, R_{AIN} < 10 kΩ V_{DDA} = 2.4 V to 3.6 V T_A = 25 °C	±3.3	±4	LSB
EO	Offset error		±1.9	±2.8	
EG	Gain error		±2.8	±3	
ED	Differential linearity error		±0.7	±1.3	
EL	Integral linearity error		±1.2	±1.7	

1. ADC DC accuracy values are measured after internal calibration.
2. ADC Accuracy vs. Negative Injection Current: Injecting negative current on any of the standard (non-robust) analog input pins should be avoided as this significantly reduces the accuracy of the conversion being performed on another analog input. It is recommended to add a Schottky diode (pin to ground) to standard analog pins which may potentially inject negative current.
   Any positive injection current within the limits specified for $I_{INJ(PIN)}$ and $\Sigma I_{INJ(PIN)}$ in *Section 6.3.14* does not affect the ADC accuracy.
3. Better performance may be achieved in restricted V_{DDA}, frequency and temperature ranges.
4. Data based on characterization results, not tested in production.

Figure 25. ADC accuracy characteristics

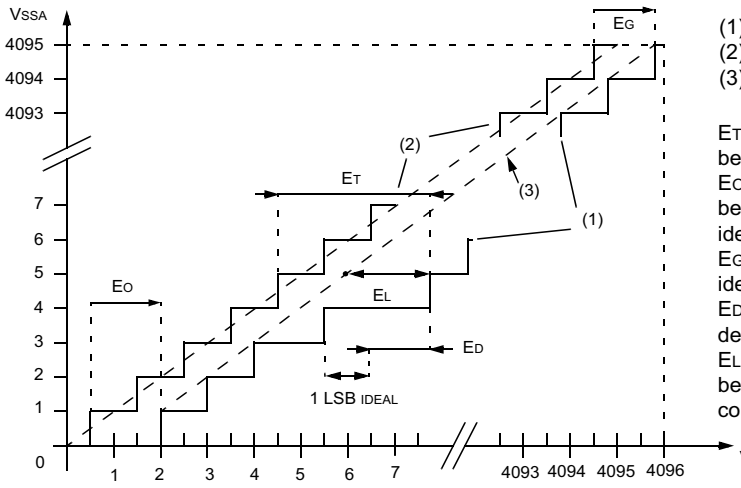

(1) Example of an actual transfer curve
(2) The ideal transfer curve
(3) End point correlation line

E_T = Total Unajusted Error: maximum deviation between the actual and ideal transfer curves.
E_O = Offset Error: maximum deviation between the first actual transition and the first ideal one.
E_G = Gain Error: deviation between the last ideal transition and the last actual one.
E_D = Differential Linearity Error: maximum deviation between actual steps and the ideal ones.
E_L = Integral Linearity Error: maximum deviation between any actual transition and the end point correlation line.

MS19880V2

Figure 26. Typical connection diagram using the ADC

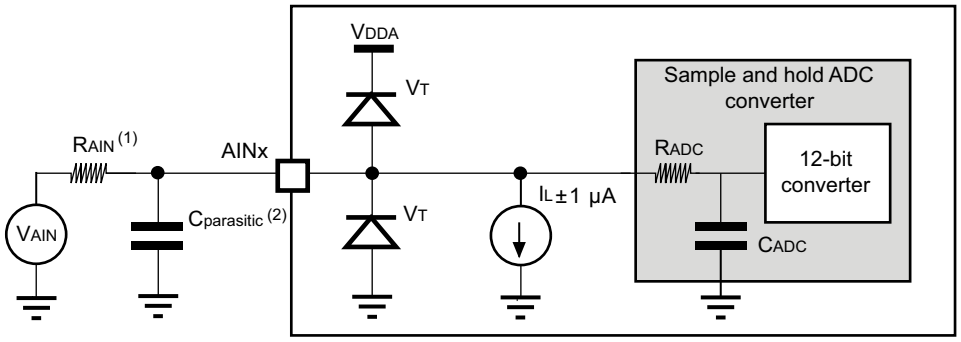

MS33900V2

1. Refer to *Table 52: ADC characteristics* for the values of R_{AIN}, R_{ADC} and C_{ADC}.
2. $C_{parasitic}$ represents the capacitance of the PCB (dependent on soldering and PCB layout quality) plus the pad capacitance (roughly 7 pF). A high $C_{parasitic}$ value will downgrade conversion accuracy. To remedy this, f_{ADC} should be reduced.

General PCB design guidelines

Power supply decoupling should be performed as shown in *Figure 13: Power supply scheme*. The 10 nF capacitor should be ceramic (good quality) and it should be placed as close as possible to the chip.

6.3.17 DAC electrical specifications

Table 55. DAC characteristics

Symbol	Parameter	Min	Typ	Max	Unit	Comments
V_{DDA}	Analog supply voltage for DAC ON	2.4	-	3.6	V	-
R_{LOAD}(1)	Resistive load with buffer ON	5	-	-	kΩ	Load connected to V_{SSA}
		25	-	-	kΩ	Load connected to V_{DDA}
R_O(1)	Impedance output with buffer OFF	-	-	15	kΩ	When the buffer is OFF, the Minimum resistive load between DAC_OUT and V_{SS} to have a 1% accuracy is 1.5 MΩ
C_{LOAD}(1)	Capacitive load	-	-	50	pF	Maximum capacitive load at DAC_OUT pin (when the buffer is ON).
DAC_OUT min(1)	Lower DAC_OUT voltage with buffer ON	0.2	-	-	V	It gives the maximum output excursion of the DAC. It corresponds to 12-bit input code (0x0E0) to (0xF1C) at V_{DDA} = 3.6 V and (0x155) and (0xEAB) at V_{DDA} = 2.4 V
DAC_OUT max(1)	Higher DAC_OUT voltage with buffer ON	-	-	V_{DDA} – 0.2	V	
DAC_OUT min(1)	Lower DAC_OUT voltage with buffer OFF	-	0.5	-	mV	It gives the maximum output excursion of the DAC.
DAC_OUT max(1)	Higher DAC_OUT voltage with buffer OFF	-	-	V_{DDA} – 1LSB	V	
I_{DDA}(1)	DAC DC current consumption in quiescent mode(2)	-	-	600	µA	With no load, middle code (0x800) on the input
		-	-	700	µA	With no load, worst code (0xF1C) on the input
DNL(3)	Differential non linearity Difference between two consecutive code-1LSB)	-	-	±0.5	LSB	Given for the DAC in 10-bit configuration
		-	-	±2	LSB	Given for the DAC in 12-bit configuration
INL(3)	Integral non linearity (difference between measured value at Code i and the value at Code i on a line drawn between Code 0 and last Code 1023)	-	-	±1	LSB	Given for the DAC in 10-bit configuration
		-	-	±4	LSB	Given for the DAC in 12-bit configuration
Offset(3)	Offset error (difference between measured value at Code (0x800) and the ideal value = V_{DDA}/2)	-	-	±10	mV	-
		-	-	±3	LSB	Given for the DAC in 10-bit at V_{DDA} = 3.6 V
		-	-	±12	LSB	Given for the DAC in 12-bit at V_{DDA} = 3.6 V

Table 55. DAC characteristics (continued)

Symbol	Parameter	Min	Typ	Max	Unit	Comments
Gain error(3)	Gain error	-	-	±0.5	%	Given for the DAC in 12-bit configuration
$t_{SETTLING}$(3)	Settling time (full scale: for a 10-bit input code transition between the lowest and the highest input codes when DAC_OUT reaches final value ±1LSB	-	3	4	µs	$C_{LOAD} \leq 50$ pF, $R_{LOAD} \geq 5$ kΩ
Update rate(3)	Max frequency for a correct DAC_OUT change when small variation in the input code (from code i to i+1LSB)	-	-	1	MS/s	$C_{LOAD} \leq 50$ pF, $R_{LOAD} \geq 5$ kΩ
t_{WAKEUP}(3)	Wakeup time from off state (Setting the ENx bit in the DAC Control register)	-	6.5	10	µs	$C_{LOAD} \leq 50$ pF, $R_{LOAD} \geq 5$ kΩ input code between lowest and highest possible ones.
PSRR+ (1)	Power supply rejection ratio (to V_{DDA}) (static DC measurement	-	–67	–40	dB	No R_{LOAD}, C_{LOAD} = 50 pF

1. Guaranteed by design, not tested in production.
2. The DAC is in “quiescent mode” when it keeps the value steady on the output so no dynamic consumption is involved.
3. Data based on characterization results, not tested in production.

Figure 27. 12-bit buffered / non-buffered DAC

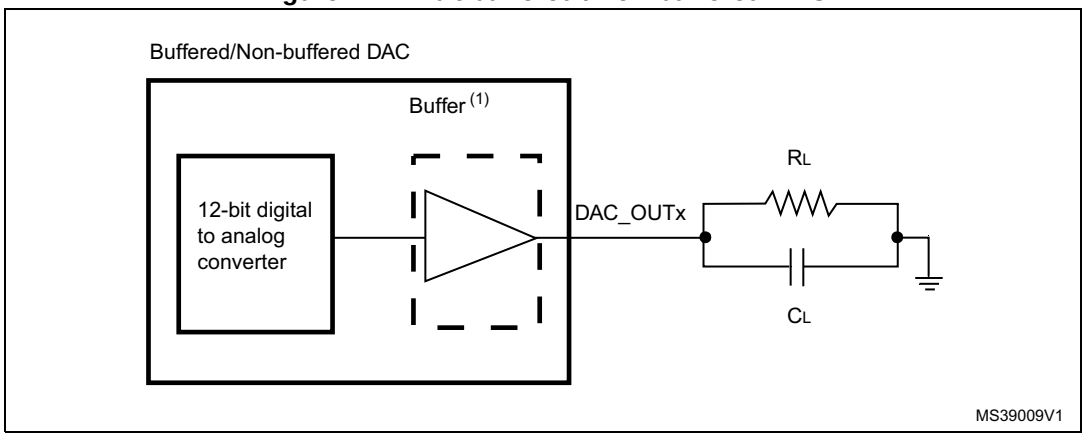

1. The DAC integrates an output buffer that can be used to reduce the output impedance and to drive external loads directly without the use of an external operational amplifier. The buffer can be bypassed by configuring the BOFFx bit in the DAC_CR register.

6.3.18 Comparator characteristics

Table 56. Comparator characteristics

Symbol	Parameter	Conditions		Min(1)	Typ	Max(1)	Unit
V_{DDA}	Analog supply voltage	-		V_{DD}	-	3.6	V
V_{IN}	Comparator input voltage range	-		0	-	V_{DDA}	-
V_{SC}	V_{REFINT} scaler offset voltage	-		-	±5	±10	mV
t_{S_SC}	V_{REFINT} scaler startup time from power down	First V_{REFINT} scaler activation after device power on		-	-	1000 (2)	ms
		Next activations		-	-	0.2	
t_{START}	Comparator startup time	Startup time to reach propagation delay specification		-	-	60	µs
t_D	Propagation delay for 200 mV step with 100 mV overdrive	Ultra-low power mode		-	2	4.5	µs
		Low power mode		-	0.7	1.5	
		Medium power mode		-	0.3	0.6	
		High speed mode	$V_{DDA} \geq 2.7$ V	-	50	100	ns
			$V_{DDA} < 2.7$ V	-	100	240	
	Propagation delay for full range step with 100 mV overdrive	Ultra-low power mode		-	2	7	µs
		Low power mode		-	0.7	2.1	
		Medium power mode		-	0.3	1.2	
		High speed mode	$V_{DDA} \geq 2.7$ V	-	90	180	ns
			$V_{DDA} < 2.7$ V	-	110	300	
V_{offset}	Comparator offset error	-		-	±4	±10	mV
dV_{offset}/dT	Offset error temperature coefficient	-		-	18	-	µV/°C
$I_{DD(COMP)}$	COMP current consumption	Ultra-low power mode		-	1.2	1.5	µA
		Low power mode		-	3	5	
		Medium power mode		-	10	15	
		High speed mode		-	75	100	

Table 56. Comparator characteristics (continued)

Symbol	Parameter	Conditions		Min(1)	Typ	Max(1)	Unit
V_{hys}	Comparator hysteresis	No hysteresis (COMPxHYST[1:0]=00)	-	-	0	-	mV
		Low hysteresis (COMPxHYST[1:0]=01)	High speed mode	3	8	13	
			All other power modes	5		10	
		Medium hysteresis (COMPxHYST[1:0]=10)	High speed mode	7	15	26	
			All other power modes	9		19	
		High hysteresis (COMPxHYST[1:0]=11)	High speed mode	18	31	49	
			All other power modes	19		40	

1. Data based on characterization results, not tested in production.
2. For more details and conditions see *Figure 28: Maximum V_{REFINT} scaler startup time from power down*.

Figure 28. Maximum V_{REFINT} scaler startup time from power down

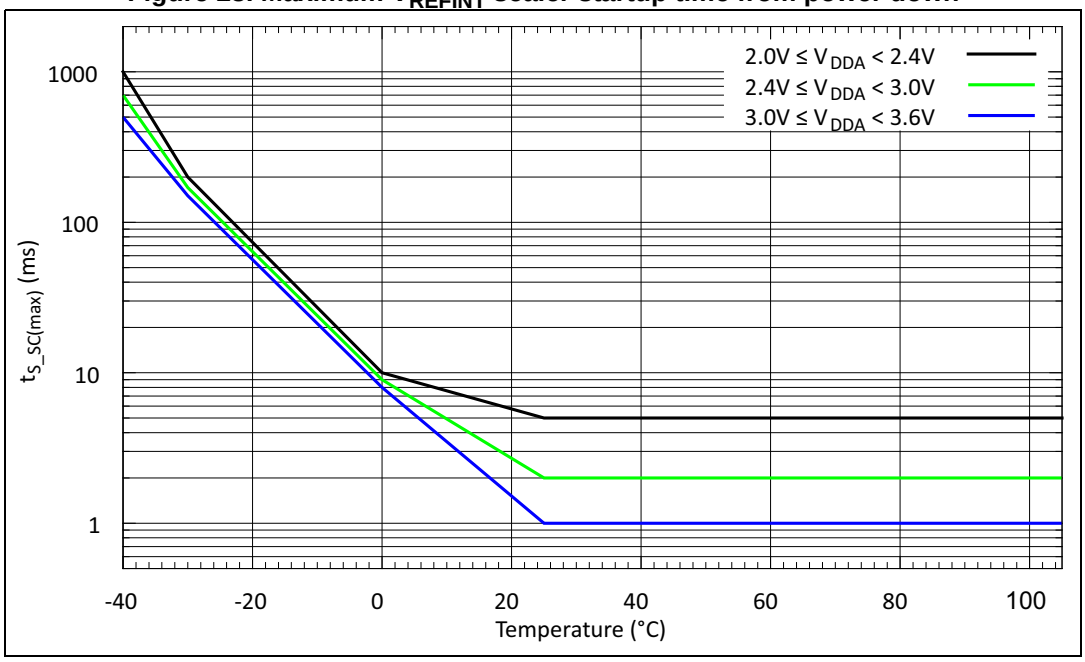

6.3.19 Temperature sensor characteristics

Table 57. TS characteristics

Symbol	Parameter	Min	Typ	Max	Unit
T_L (1)	V_{SENSE} linearity with temperature	-	± 1	± 2	°C
Avg_Slope(1)	Average slope	4.0	4.3	4.6	mV/°C
V_{30}	Voltage at 30 °C (± 5 °C)(2)	1.34	1.43	1.52	V
t_{START} (1)	ADC_IN16 buffer startup time	-	-	10	µs
t_{S_temp} (1)	ADC sampling time when reading the temperature	4	-	-	µs

1. Guaranteed by design, not tested in production.
2. Measured at V_{DDA} = 3.3 V ± 10 mV. The V_{30} ADC conversion result is stored in the TS_CAL1 byte. Refer to *Table 3: Temperature sensor calibration values*.

6.3.20 V_{BAT} monitoring characteristics

Table 58. V_{BAT} monitoring characteristics

Symbol	Parameter	Min	Typ	Max	Unit
R	Resistor bridge for V_{BAT}	-	2 x 50	-	kΩ
Q	Ratio on V_{BAT} measurement	-	2	-	-
Er(1)	Error on Q	–1	-	+1	%
t_{S_vbat} (1)	ADC sampling time when reading the V_{BAT}	4	-	-	µs

1. Guaranteed by design, not tested in production.

6.3.21 Timer characteristics

The parameters given in the following tables are guaranteed by design.

Refer to *Section 6.3.14: I/O port characteristics* for details on the input/output alternate function characteristics (output compare, input capture, external clock, PWM output).

Table 59. TIMx characteristics

Symbol	Parameter	Conditions	Min	Typ	Max	Unit
$t_{res(TIM)}$	Timer resolution time	-	-	1	-	$t_{TIMxCLK}$
		$f_{TIMxCLK}$ = 48 MHz	-	20.8	-	ns
f_{EXT}	Timer external clock frequency on CH1 to CH4	-	-	$f_{TIMxCLK}/2$	-	MHz
		$f_{TIMxCLK}$ = 48 MHz	-	24	-	MHz
t_{MAX_COUNT}	16-bit timer maximum period	-	-	2^{16}	-	$t_{TIMxCLK}$
		$f_{TIMxCLK}$ = 48 MHz	-	1365	-	µs
	32-bit counter maximum period	-	-	2^{32}	-	$t_{TIMxCLK}$
		$f_{TIMxCLK}$ = 48 MHz	-	89.48	-	s

Table 60. IWDG min/max timeout period at 40 kHz (LSI)(1)

Prescaler divider	PR[2:0] bits	Min timeout RL[11:0]= 0x000	Max timeout RL[11:0]= 0xFFF	Unit
/4	0	0.1	409.6	ms
/8	1	0.2	819.2	
/16	2	0.4	1638.4	
/32	3	0.8	3276.8	
/64	4	1.6	6553.6	
/128	5	3.2	13107.2	
/256	6 or 7	6.4	26214.4	

1. These timings are given for a 40 kHz clock but the microcontroller internal RC frequency can vary from 30 to 60 kHz. Moreover, given an exact RC oscillator frequency, the exact timings still depend on the phasing of the APB interface clock versus the LSI clock so that there is always a full RC period of uncertainty.

Table 61. WWDG min/max timeout value at 48 MHz (PCLK)

Prescaler	WDGTB	Min timeout value	Max timeout value	Unit
1	0	0.0853	5.4613	ms
2	1	0.1706	10.9226	
4	2	0.3413	21.8453	
8	3	0.6826	43.6906	

6.3.22 Communication interfaces

I^2C interface characteristics

The I^2C interface meets the timings requirements of the I^2C-bus specification and user manual rev. 03 for:

- Standard-mode (Sm): with a bit rate up to 100 kbit/s
- Fast-mode (Fm): with a bit rate up to 400 kbit/s
- Fast-mode Plus (Fm+): with a bit rate up to 1 Mbit/s.

The I^2C timings requirements are guaranteed by design when the I2Cx peripheral is properly configured (refer to Reference manual).

The SDA and SCL I/O requirements are met with the following restrictions: the SDA and SCL I/O pins are not “true” open-drain. When configured as open-drain, the PMOS connected between the I/O pin and V_{DDIOx} is disabled, but is still present. Only FTf I/O pins support Fm+ low level output current maximum requirement. Refer to *Section 6.3.14: I/O port characteristics* for the I^2C I/Os characteristics.

All I^2C SDA and SCL I/Os embed an analog filter. Refer to the table below for the analog filter characteristics:

Table 62. I²C analog filter characteristics(1)

Symbol	Parameter	Min	Max	Unit
t_{AF}	Maximum width of spikes that are suppressed by the analog filter	50(2)	260(3)	ns

1. Guaranteed by design, not tested in production.
2. Spikes with widths below $t_{AF(min)}$ are filtered.
3. Spikes with widths above $t_{AF(max)}$ are not filtered

SPI/I²S characteristics

Unless otherwise specified, the parameters given in *Table 63* for SPI or in *Table 64* for I²S are derived from tests performed under the ambient temperature, f_{PCLKx} frequency and supply voltage conditions summarized in *Table 20: General operating conditions*.

Refer to *Section 6.3.14: I/O port characteristics* for more details on the input/output alternate function characteristics (NSS, SCK, MOSI, MISO for SPI and WS, CK, SD for I²S).

Table 63. SPI characteristics(1)

Symbol	Parameter	Conditions	Min	Max	Unit
f_{SCK} $1/t_{c(SCK)}$	SPI clock frequency	Master mode	-	18	MHz
		Slave mode	-	18	
$t_{r(SCK)}$ $t_{f(SCK)}$	SPI clock rise and fall time	Capacitive load: C = 15 pF	-	6	ns
$t_{su(NSS)}$	NSS setup time	Slave mode	4Tpclk	-	ns
$t_{h(NSS)}$	NSS hold time	Slave mode	2Tpclk + 10	-	
$t_{w(SCKH)}$ $t_{w(SCKL)}$	SCK high and low time	Master mode, f_{PCLK} = 36 MHz, presc = 4	Tpclk/2 -2	Tpclk/2 + 1	
$t_{su(MI)}$ $t_{su(SI)}$	Data input setup time	Master mode	4	-	
		Slave mode	5	-	
$t_{h(MI)}$	Data input hold time	Master mode	4	-	
$t_{h(SI)}$		Slave mode	5	-	
$t_{a(SO)}$(2)	Data output access time	Slave mode, f_{PCLK} = 20 MHz	0	3Tpclk	
$t_{dis(SO)}$(3)	Data output disable time	Slave mode	0	18	
$t_{v(SO)}$	Data output valid time	Slave mode (after enable edge)	-	22.5	
$t_{v(MO)}$	Data output valid time	Master mode (after enable edge)	-	6	
$t_{h(SO)}$	Data output hold time	Slave mode (after enable edge)	11.5	-	
$t_{h(MO)}$		Master mode (after enable edge)	2	-	
DuCy(SCK)	SPI slave input clock duty cycle	Slave mode	25	75	%

1. Data based on characterization results, not tested in production.
2. Min time is for the minimum time to drive the output and the max time is for the maximum time to validate the data.
3. Min time is for the minimum time to invalidate the output and the max time is for the maximum time to put the data in Hi-Z

Figure 29. SPI timing diagram - slave mode and CPHA = 0

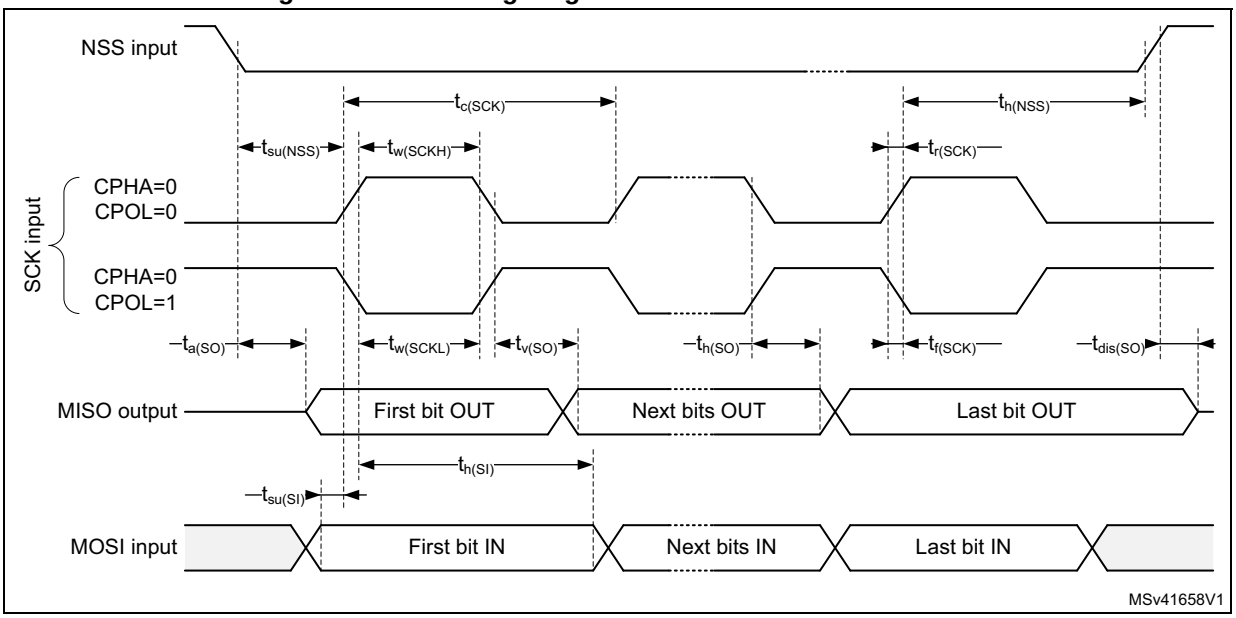

Figure 30. SPI timing diagram - slave mode and CPHA = 1

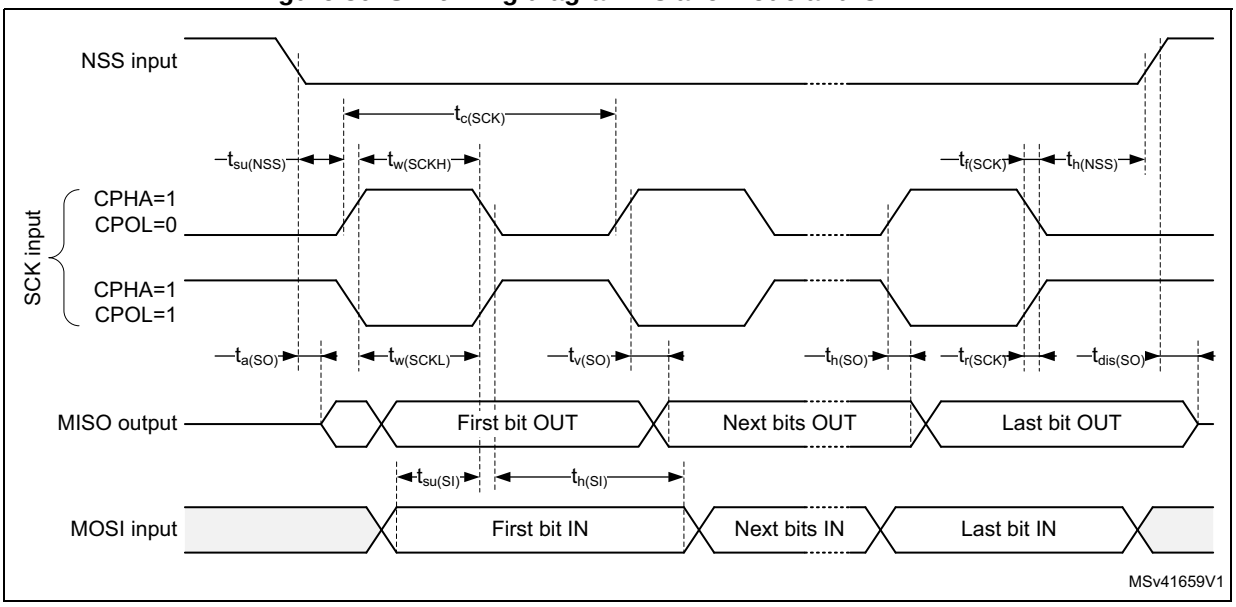

1. Measurement points are done at CMOS levels: 0.3 V_{DD} and 0.7 V_{DD}.

Figure 31. SPI timing diagram - master mode

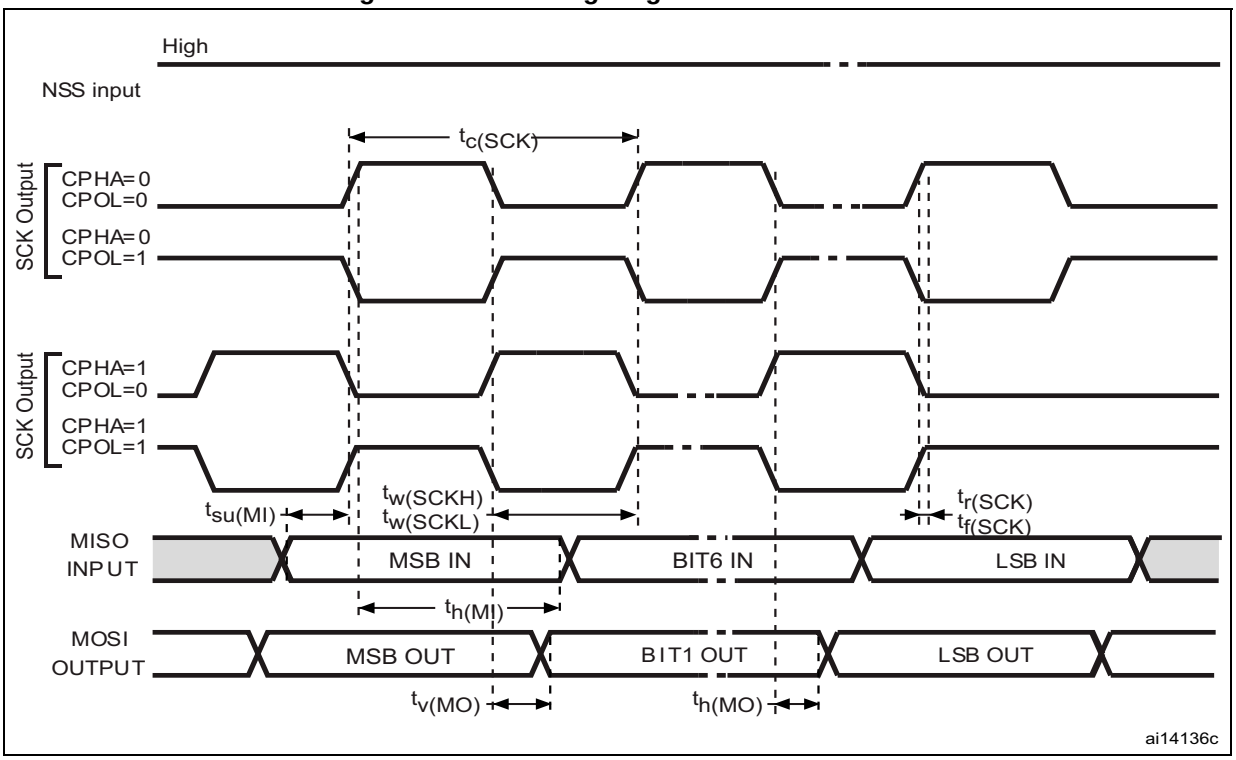

1. Measurement points are done at CMOS levels: 0.3 V_{DD} and 0.7 V_{DD}.

Table 64. I^2S characteristics(1)

Symbol	Parameter	Conditions	Min	Max	Unit
f_{CK} $1/t_{c(CK)}$	I^2S clock frequency	Master mode (data: 16 bits, Audio frequency = 48 kHz)	1.597	1.601	MHz
		Slave mode	0	6.5	
$t_{r(CK)}$	I^2S clock rise time	Capacitive load C_L = 15 pF	-	10	ns
$t_{f(CK)}$	I^2S clock fall time		-	12	
$t_{w(CKH)}$	I^2S clock high time	Master f_{PCLK}= 16 MHz, audio frequency = 48 kHz	306	-	
$t_{w(CKL)}$	I^2S clock low time		312	-	
$t_{v(WS)}$	WS valid time	Master mode	2	-	
$t_{h(WS)}$	WS hold time	Master mode	2	-	
$t_{su(WS)}$	WS setup time	Slave mode	7	-	
$t_{h(WS)}$	WS hold time	Slave mode	0	-	
DuCy(SCK)	I^2S slave input clock duty cycle	Slave mode	25	75	%

Table 64. I^2S characteristics(1) (continued)

Symbol	Parameter	Conditions	Min	Max	Unit
$t_{su(SD_MR)}$	Data input setup time	Master receiver	6	-	ns
$t_{su(SD_SR)}$		Slave receiver	2	-	
$t_{h(SD_MR)}$(2)	Data input hold time	Master receiver	4	-	
$t_{h(SD_SR)}$(2)		Slave receiver	0.5	-	
$t_{v(SD_MT)}$(2)	Data output valid time	Master transmitter	-	4	
$t_{v(SD_ST)}$(2)		Slave transmitter	-	20	
$t_{h(SD_MT)}$	Data output hold time	Master transmitter	0	-	
$t_{h(SD_ST)}$		Slave transmitter	13	-	

1. Data based on design simulation and/or characterization results, not tested in production.
2. Depends on f_{PCLK}. For example, if f_{PCLK} = 8 MHz, then T_{PCLK} = 1/f_{PLCLK} = 125 ns.

Figure 32. I^2S slave timing diagram (Philips protocol)

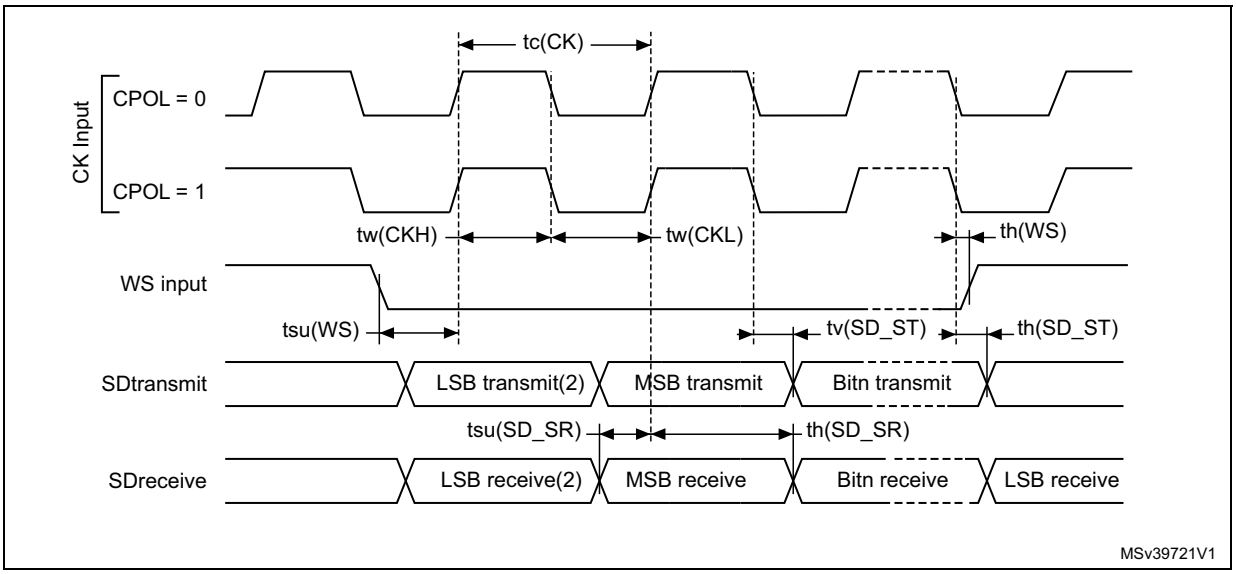

1. Measurement points are done at CMOS levels: 0.3 × V_{DDIOx} and 0.7 × V_{DDIOx}.
2. LSB transmit/receive of the previously transmitted byte. No LSB transmit/receive is sent before the first byte.

Figure 33. I²S master timing diagram (Philips protocol)

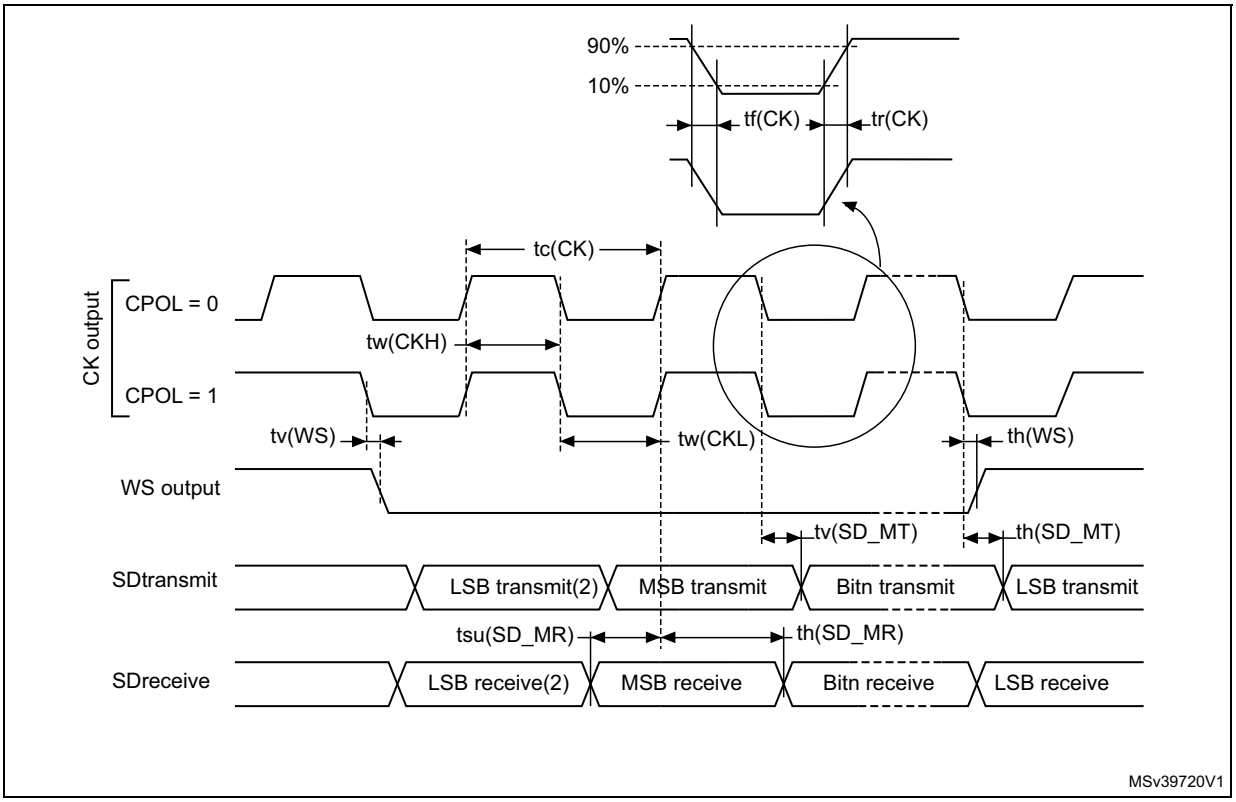

1. Data based on characterization results, not tested in production.
2. LSB transmit/receive of the previously transmitted byte. No LSB transmit/receive is sent before the first byte.

7 Package information

In order to meet environmental requirements, ST offers these devices in different grades of ECOPACK® packages, depending on their level of environmental compliance. ECOPACK® specifications, grade definitions and product status are available at: *www.st.com*. ECOPACK® is an ST trademark.

7.1 UFBGA64 package information

UFBGA64 is a 64-ball, 5 x 5 mm, 0.5 mm pitch ultra-fine-profile ball grid array package.

Figure 34. UFBGA64 package outline

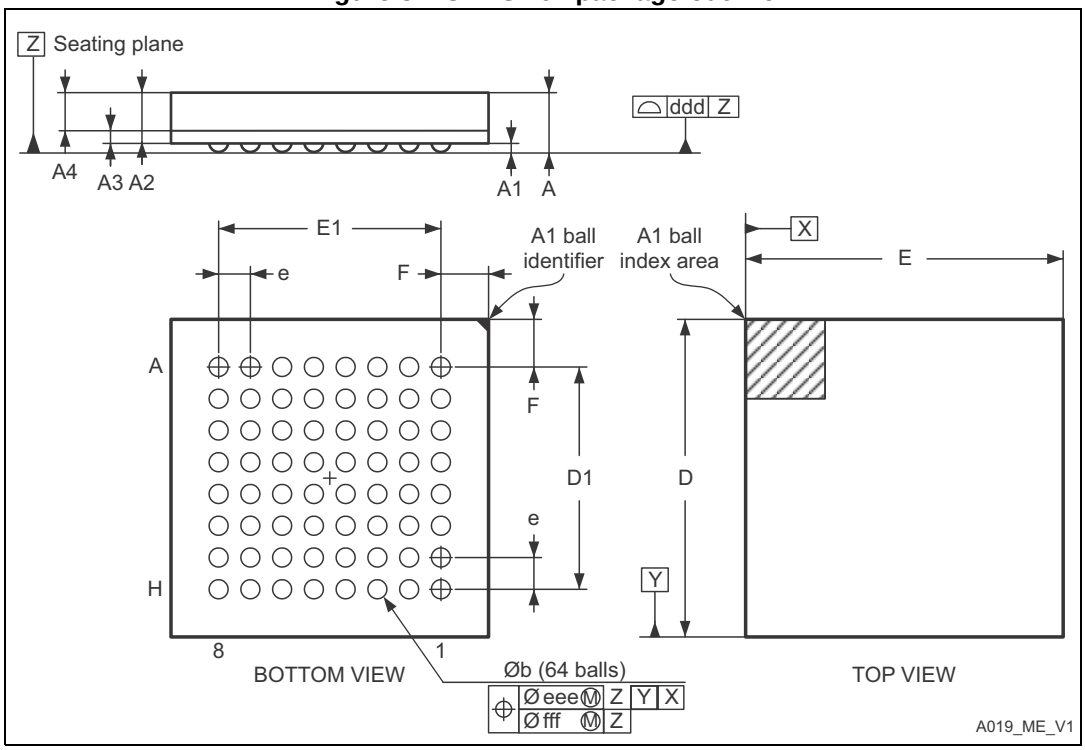

1. Drawing is not to scale.

Table 65. UFBGA64 package mechanical data

Symbol	millimeters			inches(1)		
	Min	Typ	Max	Min	Typ	Max
A	0.460	0.530	0.600	0.0181	0.0209	0.0236
A1	0.050	0.080	0.110	0.0020	0.0031	0.0043
A2	0.400	0.450	0.500	0.0157	0.0177	0.0197
A3	0.080	0.130	0.180	0.0031	0.0051	0.0071
A4	0.270	0.320	0.370	0.0106	0.0126	0.0146

Table 65. UFBGA64 package mechanical data (continued)

Symbol	millimeters			inches[1]		
	Min	Typ	Max	Min	Typ	Max
A	0.460	0.530	0.600	0.0181	0.0209	0.0236
b	0.170	0.280	0.330	0.0067	0.0110	0.0130
D	4.850	5.000	5.150	0.1909	0.1969	0.2028
D1	3.450	3.500	3.550	0.1358	0.1378	0.1398
E	4.850	5.000	5.150	0.1909	0.1969	0.2028
E1	3.450	3.500	3.550	0.1358	0.1378	0.1398
e	-	0.500	-	-	0.0197	-
F	0.700	0.750	0.800	0.0276	0.0295	0.0315
ddd	-	-	0.080	-	-	0.0031
eee	-	-	0.150	-	-	0.0059
fff	-	-	0.050	-	-	0.0020

1. Values in inches are converted from mm and rounded to 4 decimal digits.

Figure 35. Recommended footprint for UFBGA64 package

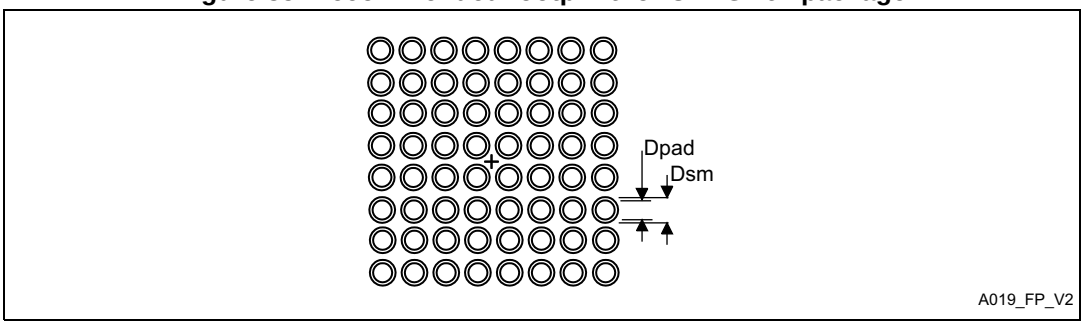

Table 66. UFBGA64 recommended PCB design rules

Dimension	Recommended values
Pitch	0.5
Dpad	0.280 mm
Dsm	0.370 mm typ. (depends on the soldermask registration tolerance)
Stencil opening	0.280 mm
Stencil thickness	Between 0.100 mm and 0.125 mm
Pad trace width	0.100 mm

Device marking

The following figure gives an example of topside marking orientation versus ball A1 identifier location.

Other optional marking or inset/upset marks, which identify the parts throughout supply chain operations, are not indicated below.

Figure 36. UFBGA64 package marking example

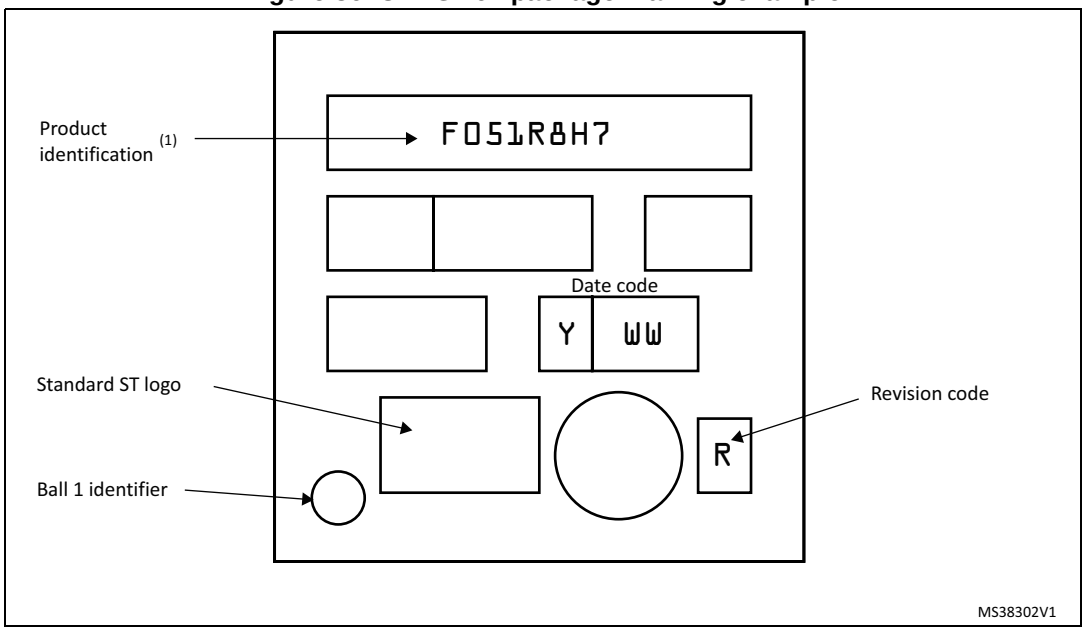

1. Parts marked as "ES", "E" or accompanied by an Engineering Sample notification letter, are not yet qualified and therefore not yet ready to be used in production and any consequences deriving from such usage will not be at ST charge. In no event, ST will be liable for any customer usage of these engineering samples in production. ST Quality has to be contacted prior to any decision to use these Engineering Samples to run qualification activity.

7.2 LQFP64 package information

LQFP64 is a 64-pin, 10 x 10 mm low-profile quad flat package.

Figure 37. LQFP64 package outline

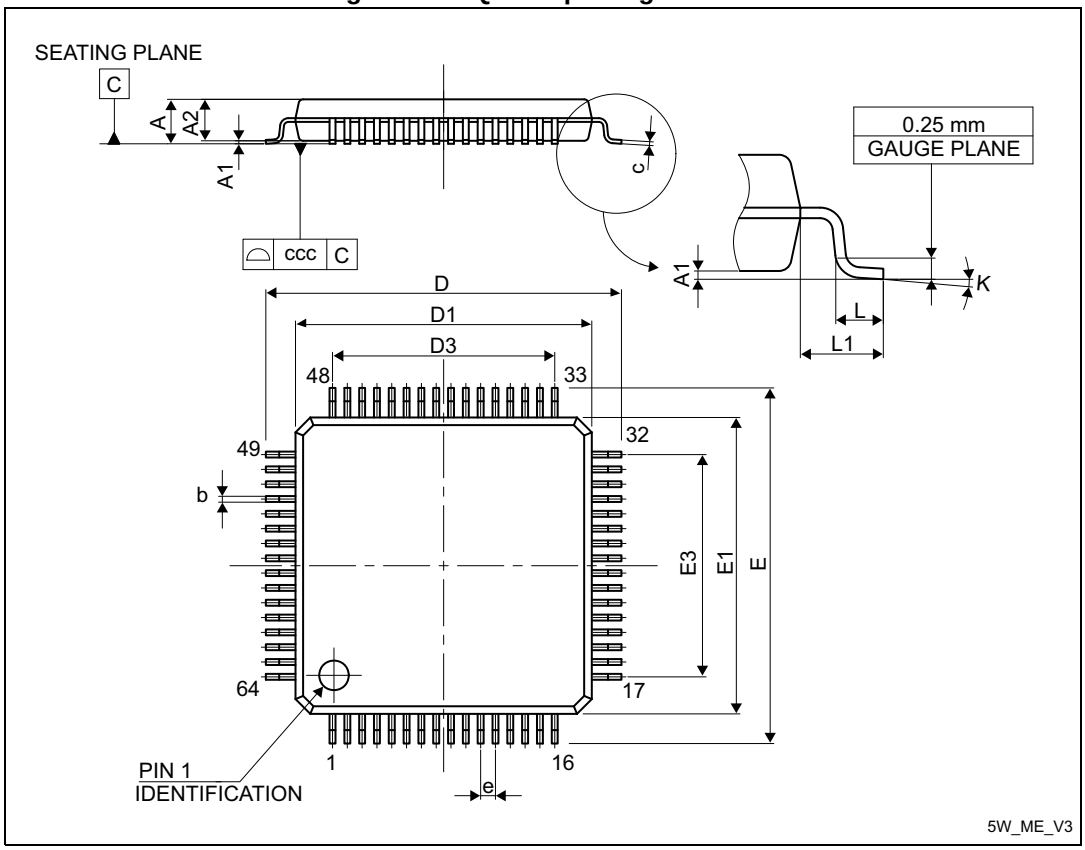

1. Drawing is not to scale.

Table 67. LQFP64 package mechanical data

Symbol	millimeters			inches[1]		
	Min	Typ	Max	Min	Typ	Max
A	-	-	1.600	-	-	0.0630
A1	0.050	-	0.150	0.0020	-	0.0059
A2	1.350	1.400	1.450	0.0531	0.0551	0.0571
b	0.170	0.220	0.270	0.0067	0.0087	0.0106
c	0.090	-	0.200	0.0035	-	0.0079
D	-	12.000	-	-	0.4724	-
D1	-	10.000	-	-	0.3937	-
D3	-	7.500	-	-	0.2953	-
E	-	12.000	-	-	0.4724	-
E1	-	10.000	-	-	0.3937	-

Table 67. LQFP64 package mechanical data (continued)

Symbol	millimeters			inches[1]		
	Min	Typ	Max	Min	Typ	Max
E3	-	7.500	-	-	0.2953	-
e	-	0.500	-	-	0.0197	-
K	0°	3.5°	7°	0°	3.5°	7°
L	0.450	0.600	0.750	0.0177	0.0236	0.0295
L1	-	1.000	-	-	0.0394	-
ccc	-	-	0.080	-	-	0.0031

1. Values in inches are converted from mm and rounded to 4 decimal digits.

Figure 38. Recommended footprint for LQFP64 package

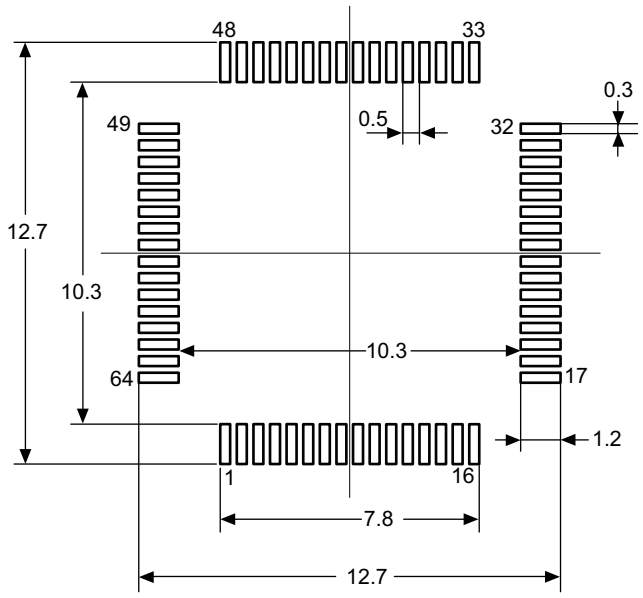

1. Dimensions are expressed in millimeters.

Device marking

The following figure gives an example of topside marking orientation versus pin 1 identifier location.

Other optional marking or inset/upset marks, which identify the parts throughout supply chain operations, are not indicated below.

Figure 39. LQFP64 package marking example

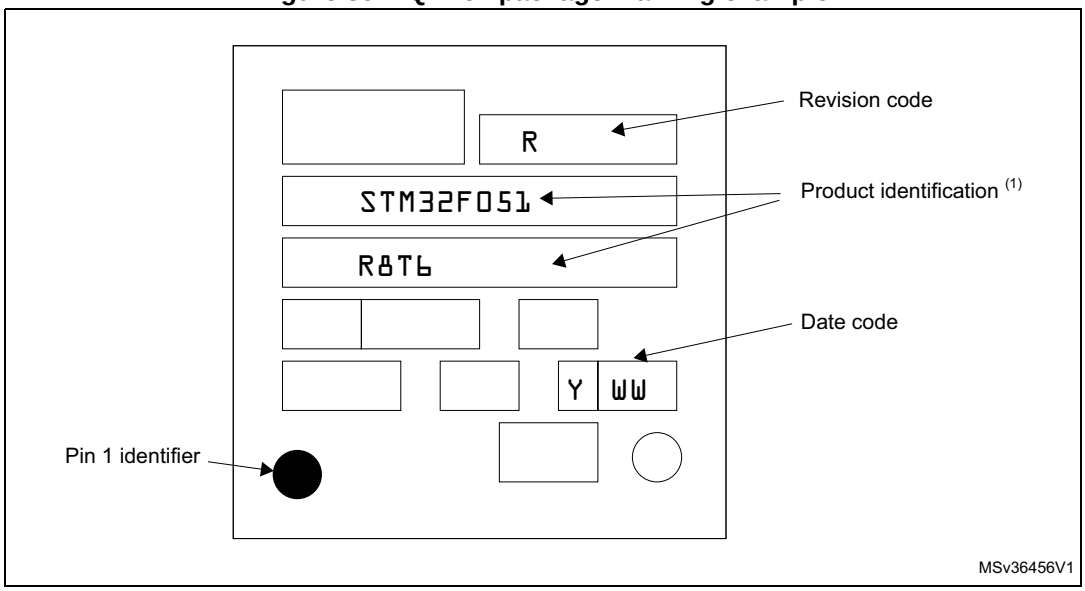

1. Parts marked as "ES", "E" or accompanied by an Engineering Sample notification letter, are not yet qualified and therefore not yet ready to be used in production and any consequences deriving from such usage will not be at ST charge. In no event, ST will be liable for any customer usage of these engineering samples in production. ST Quality has to be contacted prior to any decision to use these Engineering Samples to run qualification activity.

7.3 LQFP48 package information

LQFP48 is a 48-pin, 7 x 7 mm low-profile quad flat package.

Figure 40. LQFP48 package outline

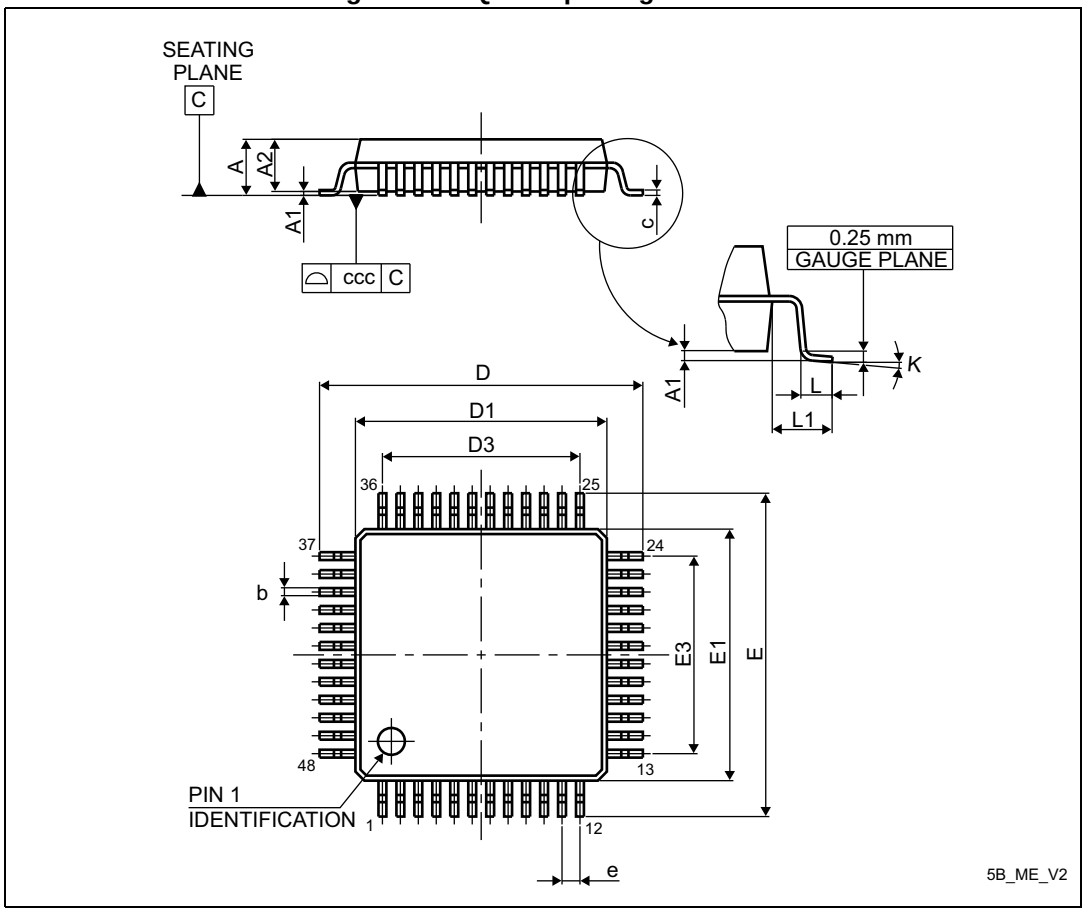

1. Drawing is not to scale.

Table 68. LQFP48 package mechanical data

Symbol	millimeters			inches[1]		
	Min	Typ	Max	Min	Typ	Max
A	-	-	1.600	-	-	0.0630
A1	0.050	-	0.150	0.0020	-	0.0059
A2	1.350	1.400	1.450	0.0531	0.0551	0.0571
b	0.170	0.220	0.270	0.0067	0.0087	0.0106
c	0.090	-	0.200	0.0035	-	0.0079
D	8.800	9.000	9.200	0.3465	0.3543	0.3622
D1	6.800	7.000	7.200	0.2677	0.2756	0.2835
D3	-	5.500	-	-	0.2165	-
E	8.800	9.000	9.200	0.3465	0.3543	0.3622
E1	6.800	7.000	7.200	0.2677	0.2756	0.2835
E3	-	5.500	-	-	0.2165	-
e	-	0.500	-	-	0.0197	-
L	0.450	0.600	0.750	0.0177	0.0236	0.0295
L1	-	1.000	-	-	0.0394	-
k	0°	3.5°	7°	0°	3.5°	7°
ccc	-	-	0.080	-	-	0.0031

1. Values in inches are converted from mm and rounded to 4 decimal digits.

Figure 41. Recommended footprint for LQFP48 package

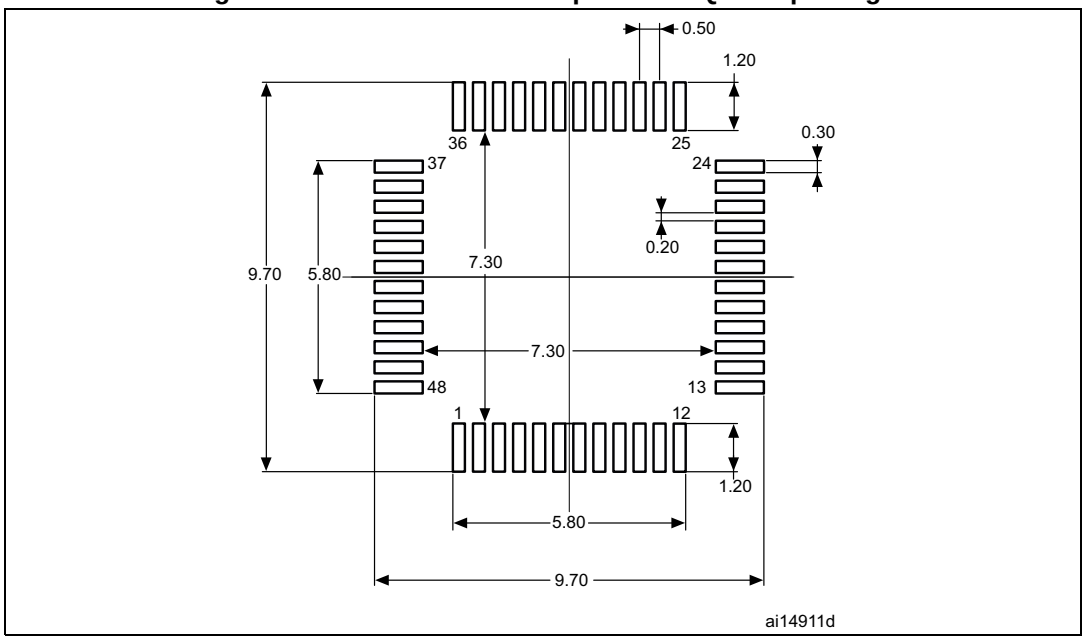

1. Dimensions are expressed in millimeters.

Device marking

The following figure gives an example of topside marking orientation versus pin 1 identifier location.

Other optional marking or inset/upset marks, which identify the parts throughout supply chain operations, are not indicated below.

Figure 42. LQFP48 package marking example

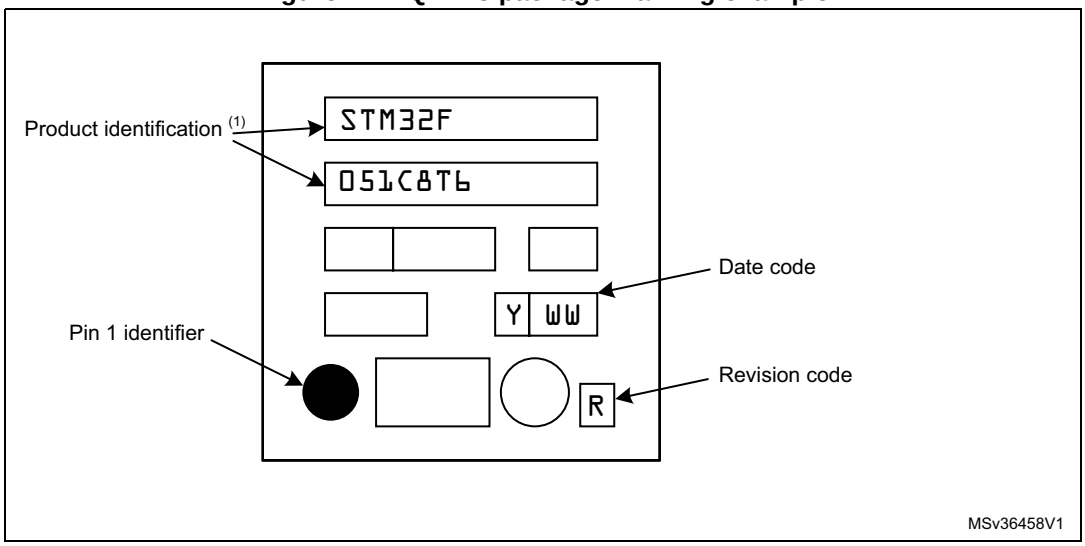

1. Parts marked as "ES", "E" or accompanied by an Engineering Sample notification letter, are not yet qualified and therefore not yet ready to be used in production and any consequences deriving from such usage will not be at ST charge. In no event, ST will be liable for any customer usage of these engineering samples in production. ST Quality has to be contacted prior to any decision to use these Engineering Samples to run qualification activity.

7.4 UFQFPN48 package information

UFQFPN48 is a 48-lead, 7x7 mm, 0.5 mm pitch, ultra-thin fine-pitch quad flat package.

Figure 43. UFQFPN48 package outline

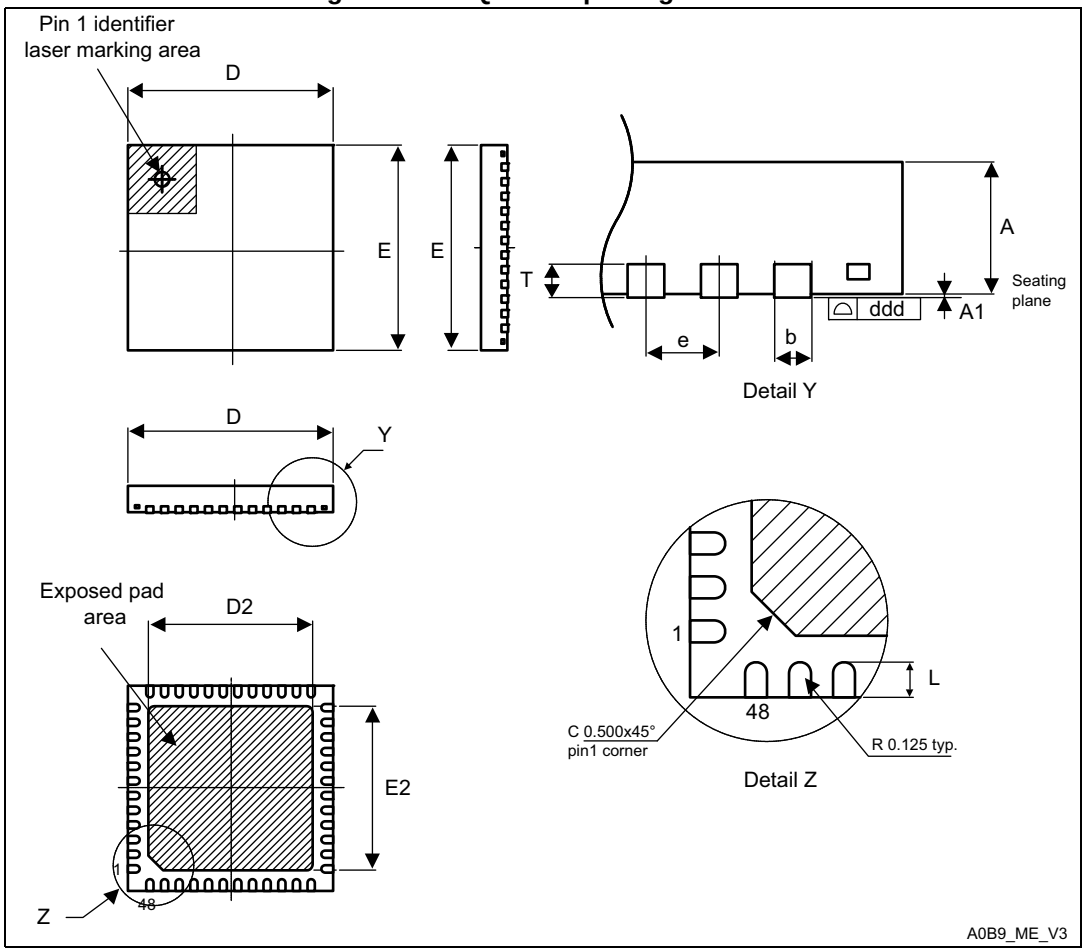

1. Drawing is not to scale.
2. All leads/pads should also be soldered to the PCB to improve the lead/pad solder joint life.
3. There is an exposed die pad on the underside of the UFQFPN package. It is recommended to connect and solder this back-side pad to PCB ground.

Table 69. UFQFPN48 package mechanical data

Symbol	millimeters			inches[1]		
	Min	Typ	Max	Min	Typ	Max
A	0.500	0.550	0.600	0.0197	0.0217	0.0236
A1	0.000	0.020	0.050	0.0000	0.0008	0.0020
D	6.900	7.000	7.100	0.2717	0.2756	0.2795
E	6.900	7.000	7.100	0.2717	0.2756	0.2795
D2	5.500	5.600	5.700	0.2165	0.2205	0.2244
E2	5.500	5.600	5.700	0.2165	0.2205	0.2244
L	0.300	0.400	0.500	0.0118	0.0157	0.0197
T	-	0.152	-	-	0.0060	-
b	0.200	0.250	0.300	0.0079	0.0098	0.0118
e	-	0.500	-	-	0.0197	-
ddd	-	-	0.080	-	-	0.0031

1. Values in inches are converted from mm and rounded to 4 decimal digits.

Figure 44. Recommended footprint for UFQFPN48 package

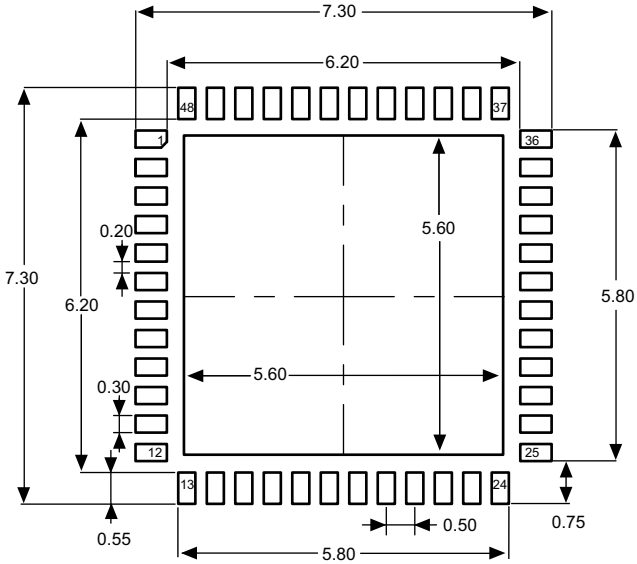

1. Dimensions are expressed in millimeters.

Device marking

The following figure gives an example of topside marking orientation versus pin 1 identifier location.

Other optional marking or inset/upset marks, which identify the parts throughout supply chain operations, are not indicated below.

Figure 45. UFQFPN48 package marking example

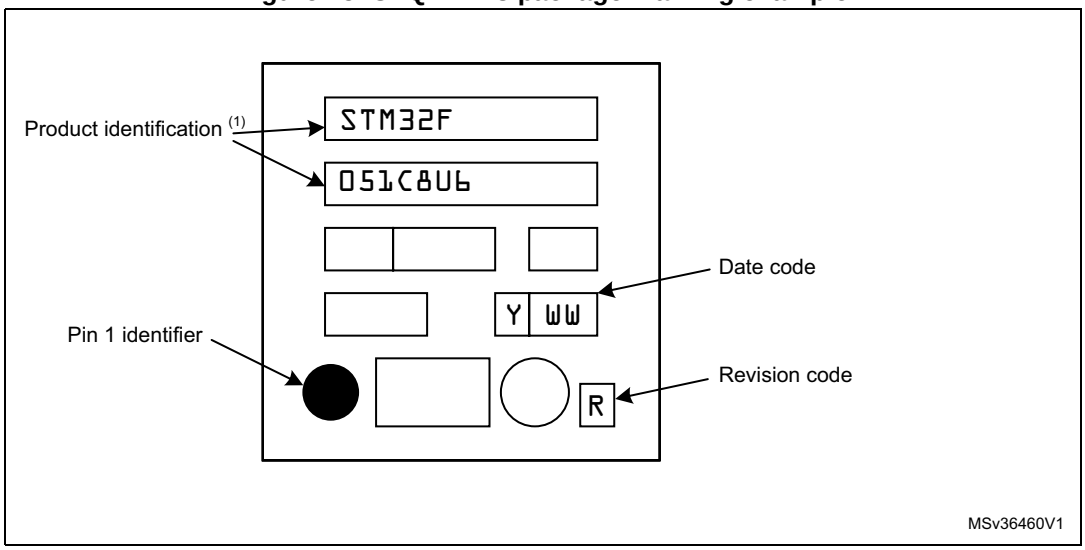

1. Parts marked as "ES", "E" or accompanied by an Engineering Sample notification letter, are not yet qualified and therefore not yet ready to be used in production and any consequences deriving from such usage will not be at ST charge. In no event, ST will be liable for any customer usage of these engineering samples in production. ST Quality has to be contacted prior to any decision to use these Engineering Samples to run qualification activity.

7.5 WLCSP36 package information

WLCSP36 is a 36-ball, 2.605 x 2.703 mm, 0.4 mm pitch wafer-level chip-scale package.

Figure 46. WLCSP36 package outline

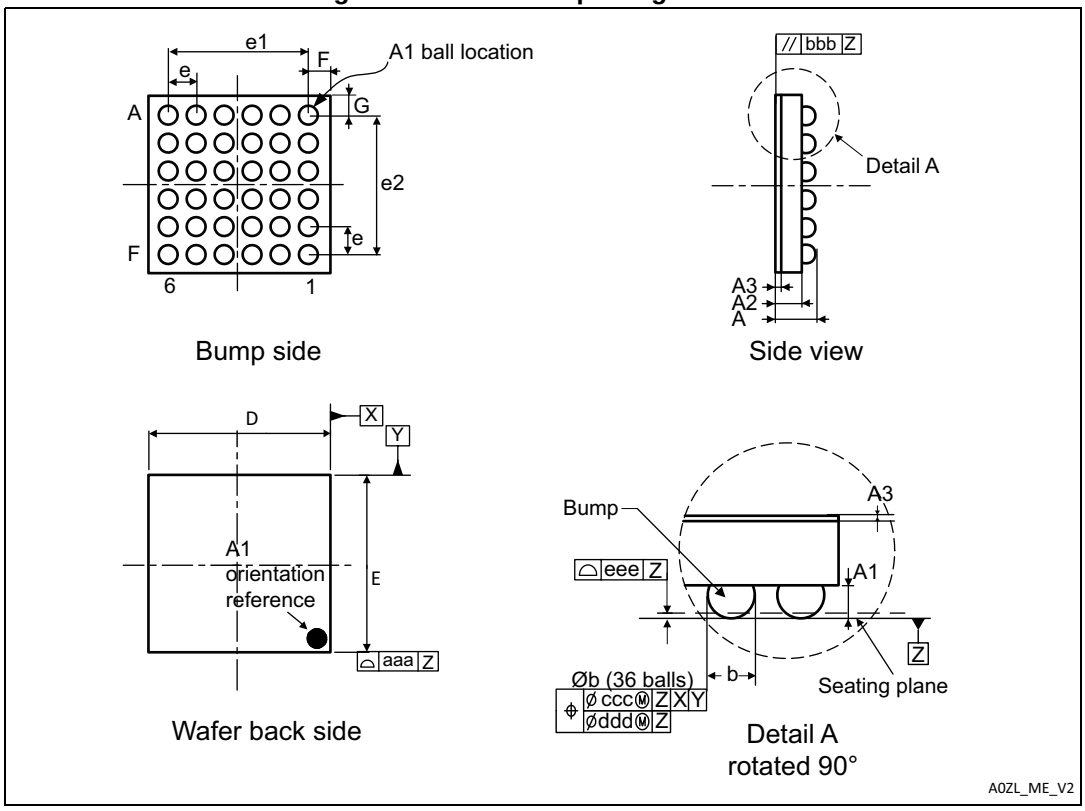

1. Drawing is not to scale.

Table 70. WLCSP36 package mechanical data

Symbol	millimeters			inches(1)		
	Min	Typ	Max	Min	Typ	Max
A	0.525	0.555	0.585	0.0207	0.0219	0.0230
A1	-	0.175	-	-	0.0069	-
A2	-	0.380	-	-	0.0150	-
A3(2)	-	0.025	-	-	0.0010	-
b(3)	0.220	0.250	0.280	0.0087	0.0098	0.0110
D	2.570	2.605	2.640	0.1012	0.1026	0.1039
E	2.668	2.703	2.738	0.1050	0.1064	0.1078
e	-	0.400	-	-	0.0157	-
e1	-	2.000	-	-	0.0787	-
e2	-	2.000	-	-	0.0787	-

Table 70. WLCSP36 package mechanical data (continued)

Symbol	millimeters			inches[1]		
	Min	Typ	Max	Min	Typ	Max
F	-	0.3025	-	-	0.0119	-
G	-	0.3515	-	-	0.0138	-
aaa	-	-	0.100	-	-	0.0039
bbb	-	-	0.100	-	-	0.0039
ccc	-	-	0.100	-	-	0.0039
ddd	-	-	0.050	-	-	0.0020
eee	-	-	0.050	-	-	0.0020

1. Values in inches are converted from mm and rounded to 4 decimal digits.
2. Back side coating.
3. Dimension is measured at the maximum bump diameter parallel to primary datum Z.

Figure 47. Recommended pad footprint for WLCSP36 package

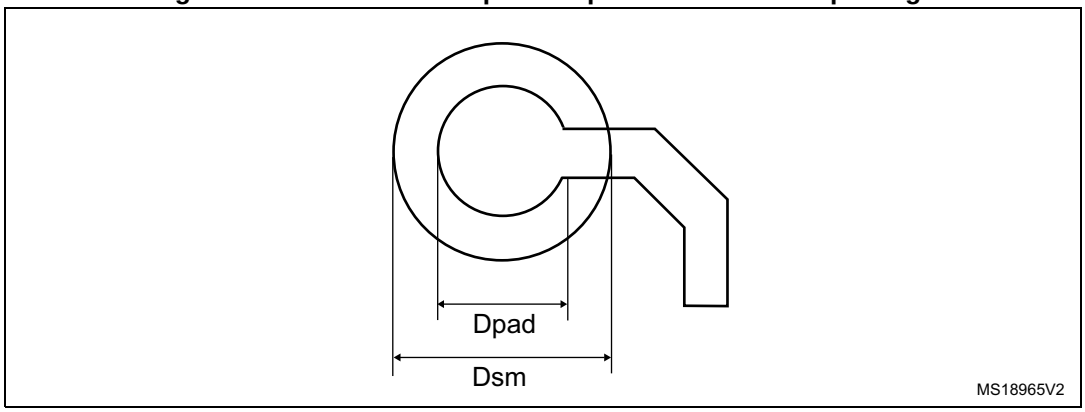

Table 71. WLCSP36 recommended PCB design rules

Dimension	Recommended values
Pitch	0.4 mm
Dpad	260 µm max. (circular) 220 µm recommended
Dsm	300 µm min. (for 260 µm diameter pad)
PCB pad design	Non-solder mask defined via underbump allowed

Device marking

The following figure gives an example of topside marking orientation versus ball A1 identifier location.

Other optional marking or inset/upset marks, which identify the parts throughout supply chain operations, are not indicated below.

Figure 48. WLCSP36 package marking example

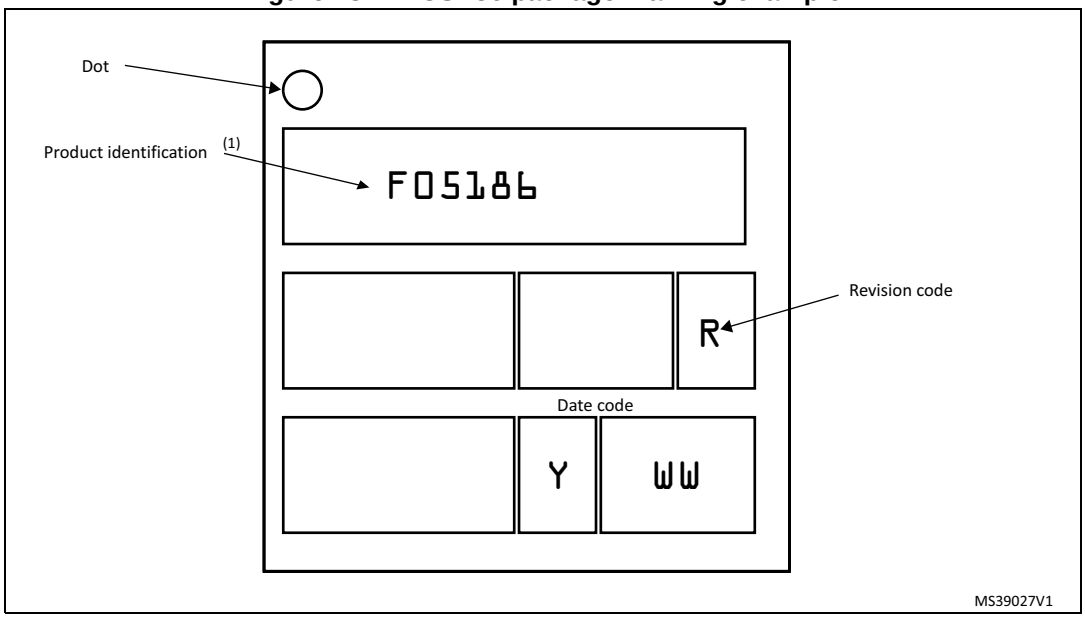

1. Parts marked as "ES", "E" or accompanied by an Engineering Sample notification letter, are not yet qualified and therefore not yet ready to be used in production and any consequences deriving from such usage will not be at ST charge. In no event, ST will be liable for any customer usage of these engineering samples in production. ST Quality has to be contacted prior to any decision to use these Engineering Samples to run qualification activity.

7.6 LQFP32 package information

LQFP32 is a 32-pin, 7 x 7 mm low-profile quad flat package.

Figure 49. LQFP32 package outline

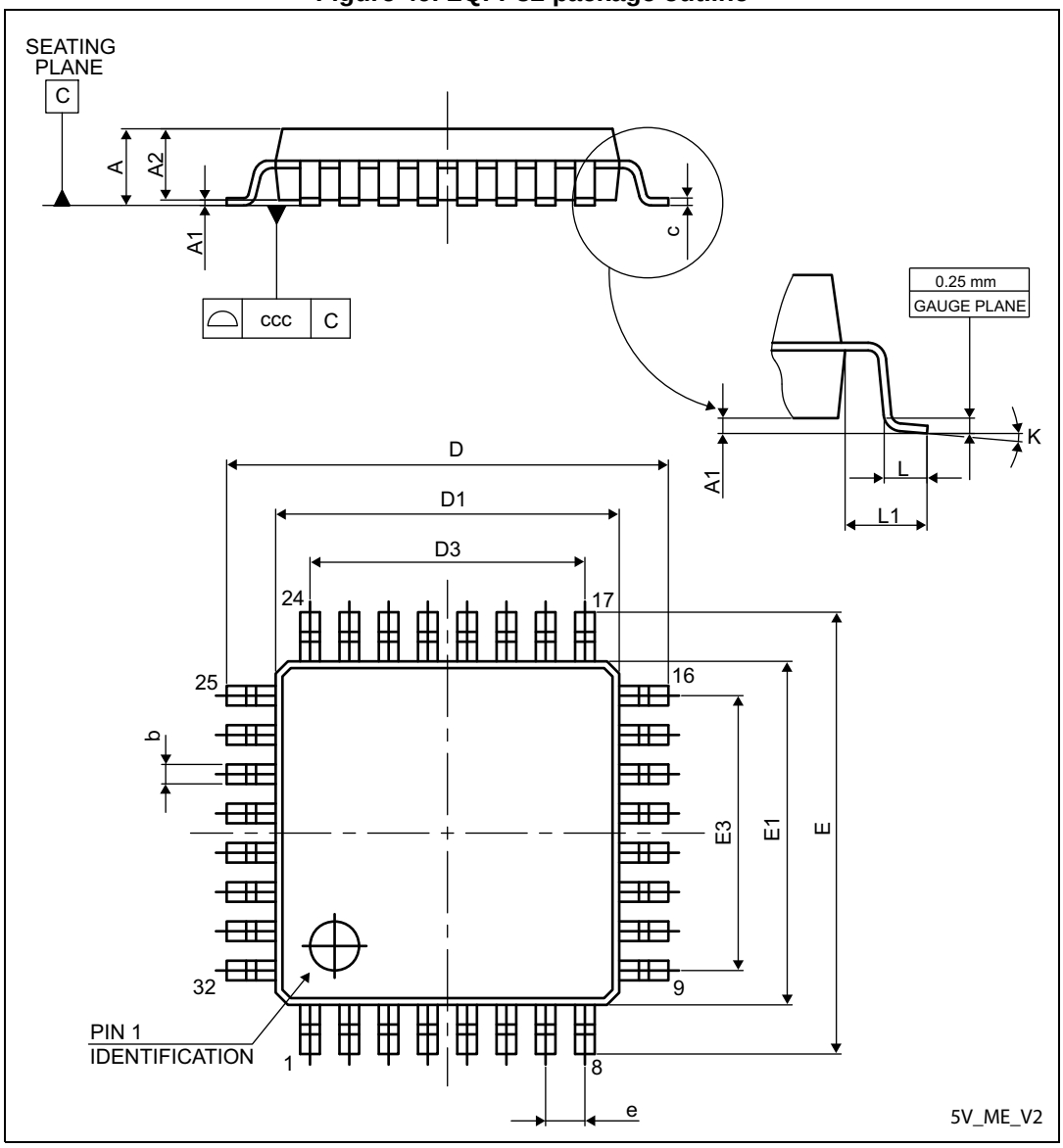

1. Drawing is not to scale.

Table 72. LQFP32 package mechanical data

Symbol	millimeters			inches[1]		
	Min	Typ	Max	Min	Typ	Max
A	-	-	1.600	-	-	0.0630
A1	0.050	-	0.150	0.0020	-	0.0059
A2	1.350	1.400	1.450	0.0531	0.0551	0.0571
b	0.300	0.370	0.450	0.0118	0.0146	0.0177
c	0.090	-	0.200	0.0035	-	0.0079
D	8.800	9.000	9.200	0.3465	0.3543	0.3622
D1	6.800	7.000	7.200	0.2677	0.2756	0.2835
D3	-	5.600	-	-	0.2205	-
E	8.800	9.000	9.200	0.3465	0.3543	0.3622
E1	6.800	7.000	7.200	0.2677	0.2756	0.2835
E3	-	5.600	-	-	0.2205	-
e	-	0.800	-	-	0.0315	-
L	0.450	0.600	0.750	0.0177	0.0236	0.0295
L1	-	1.000	-	-	0.0394	-
k	0°	3.5°	7°	0°	3.5°	7°
ccc	-	-	0.100	-	-	0.0039

1. Values in inches are converted from mm and rounded to 4 decimal digits.

Figure 50. Recommended footprint for LQFP32 package

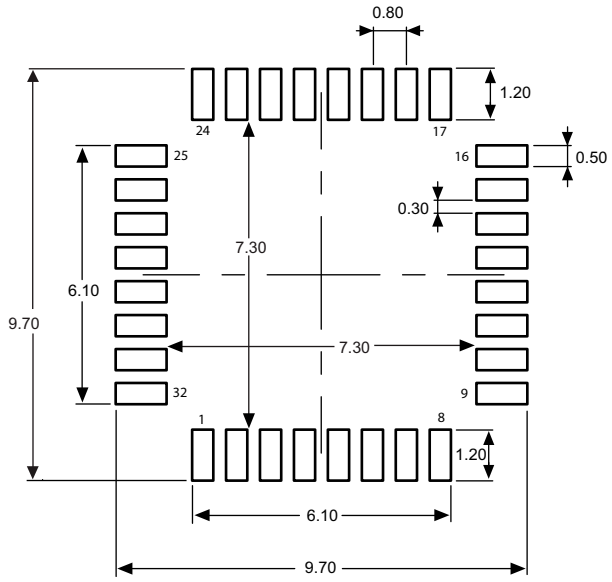

1. Dimensions are expressed in millimeters.

Device marking

The following figure gives an example of topside marking orientation versus pin 1 identifier location.

Other optional marking or inset/upset marks, which identify the parts throughout supply chain operations, are not indicated below.

Figure 51. LQFP32 package marking example

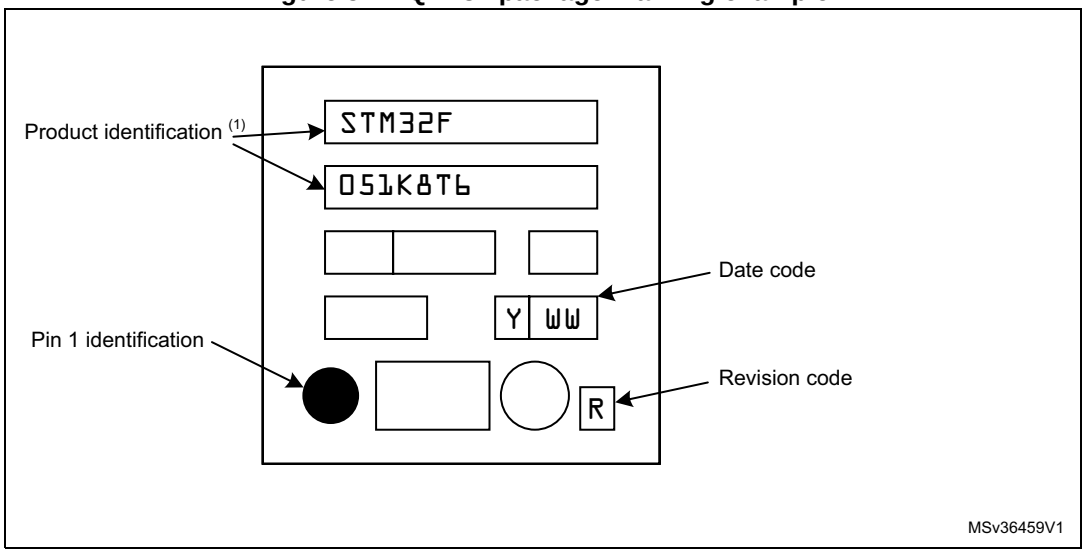

1. Parts marked as "ES", "E" or accompanied by an Engineering Sample notification letter, are not yet qualified and therefore not yet ready to be used in production and any consequences deriving from such usage will not be at ST charge. In no event, ST will be liable for any customer usage of these engineering samples in production. ST Quality has to be contacted prior to any decision to use these Engineering Samples to run qualification activity.

7.7 UFQFPN32 package information

UFQFPN32 is a 32-pin, 5x5 mm, 0.5 mm pitch ultra-thin fine-pitch quad flat package.

Figure 52. UFQFPN32 package outline

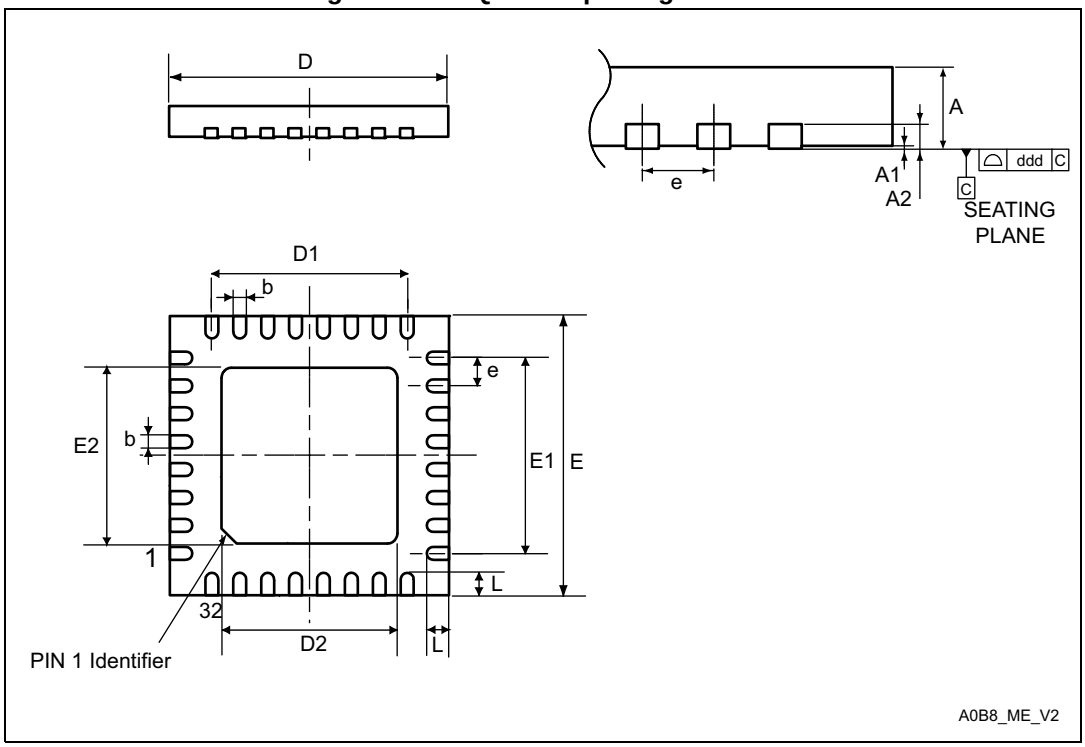

1. Drawing is not to scale.
2. All leads/pads should also be soldered to the PCB to improve the lead/pad solder joint life.
3. There is an exposed die pad on the underside of the UFQFPN package. This pad is used for the device ground and must be connected. It is referred to as pin 0 in *Table: Pin definitions*.

Table 73. UFQFPN32 package mechanical data

Symbol	millimeters			inches[1]		
	Min	Typ	Max	Min	Typ	Max
A	0.500	0.550	0.600	0.0197	0.0217	0.0236
A1	0.000	0.020	0.050	0.0000	0.0008	0.0020
A3	-	0.152	-	-	0.0060	-
b	0.180	0.230	0.280	0.0071	0.0091	0.0110
D	4.900	5.000	5.100	0.1929	0.1969	0.2008
D1	3.400	3.500	3.600	0.1339	0.1378	0.1417
D2	3.400	3.500	3.600	0.1339	0.1378	0.1417
E	4.900	5.000	5.100	0.1929	0.1969	0.2008
E1	3.400	3.500	3.600	0.1339	0.1378	0.1417
E2	3.400	3.500	3.600	0.1339	0.1378	0.1417
e	-	0.500	-	-	0.0197	-
L	0.300	0.400	0.500	0.0118	0.0157	0.0197
ddd	-	-	0.080	-	-	0.0031

1. Values in inches are converted from mm and rounded to 4 decimal digits.

Figure 53. Recommended footprint for UFQFPN32 package

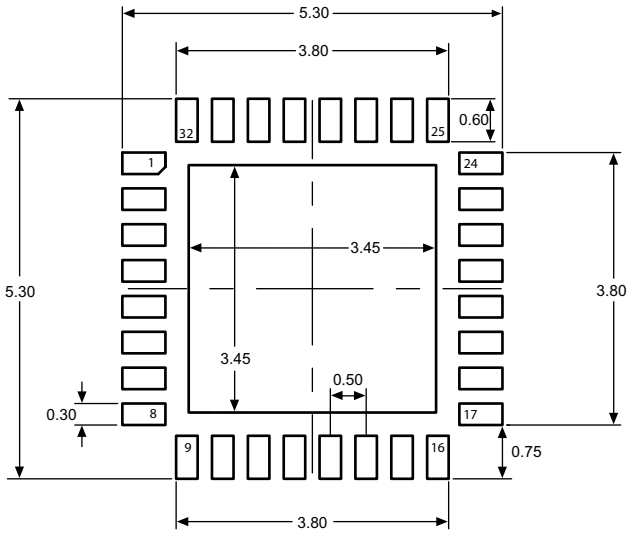

1. Dimensions are expressed in millimeters.

Device marking

The following figure gives an example of topside marking orientation versus pin 1 identifier location.

Other optional marking or inset/upset marks, which identify the parts throughout supply chain operations, are not indicated below.

Figure 54. UFQFPN32 package marking example

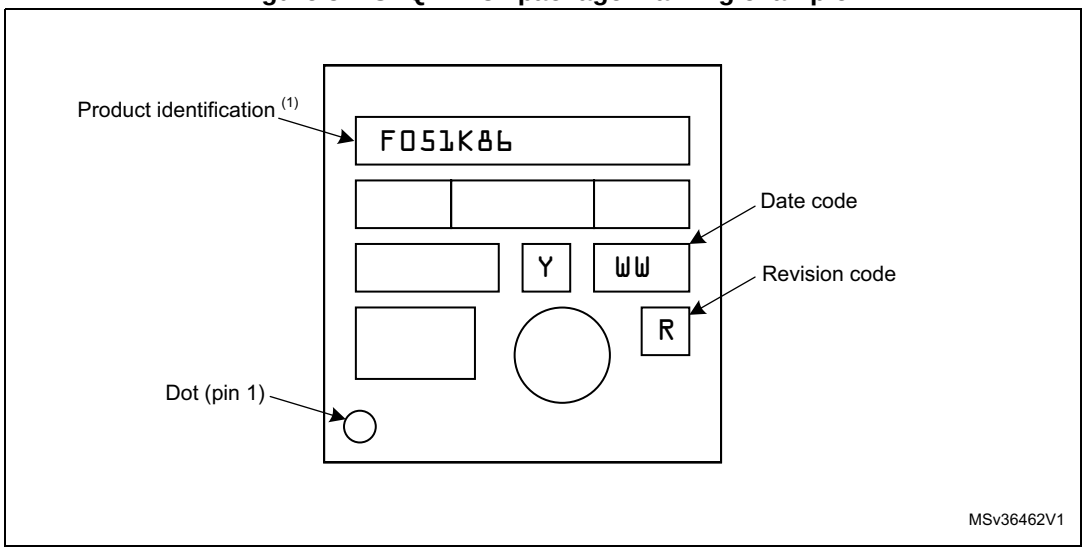

1. Parts marked as "ES", "E" or accompanied by an Engineering Sample notification letter, are not yet qualified and therefore not yet ready to be used in production and any consequences deriving from such usage will not be at ST charge. In no event, ST will be liable for any customer usage of these engineering samples in production. ST Quality has to be contacted prior to any decision to use these Engineering Samples to run qualification activity.

7.8 Thermal characteristics

The maximum chip junction temperature ($T_J$max) must never exceed the values given in *Table 20: General operating conditions*.

The maximum chip-junction temperature, T_J max, in degrees Celsius, may be calculated using the following equation:

$$T_J \text{ max} = T_A \text{ max} + (P_D \text{ max} \times \Theta_{JA})$$

Where:

- T_A max is the maximum ambient temperature in °C,
- Θ_{JA} is the package junction-to-ambient thermal resistance, in °C/W,
- P_D max is the sum of P_{INT} max and $P_{I/O}$ max (P_D max = P_{INT} max + $P_{I/O}$max),
- P_{INT} max is the product of I_{DD} and V_{DD}, expressed in Watts. This is the maximum chip internal power.

$P_{I/O}$ max represents the maximum power dissipation on output pins where:

$$P_{I/O} \text{ max} = \Sigma (V_{OL} \times I_{OL}) + \Sigma ((V_{DDIOx} - V_{OH}) \times I_{OH}),$$

taking into account the actual V_{OL} / I_{OL} and V_{OH} / I_{OH} of the I/Os at low and high level in the application.

Table 74. Package thermal characteristics

Symbol	Parameter	Value	Unit
Θ_{JA}	**Thermal resistance junction-ambient** LQFP64 - 10 × 10 mm / 0.5 mm pitch	45	°C/W
	Thermal resistance junction-ambient LQFP48 - 7 × 7 mm	55	
	Thermal resistance junction-ambient LQFP32 - 7 × 7 mm	56	
	Thermal resistance junction-ambient UFBGA64 - 5 × 5 mm	65	
	Thermal resistance junction-ambient UFQFPN48 - 7 × 7 mm	32	
	Thermal resistance junction-ambient UFQFPN32 - 5 × 5 mm	38	
	Thermal resistance junction-ambient WLCSP36 - 2.6 × 2.7 mm	60	

7.8.1 Reference document

JESD51-2 Integrated Circuits Thermal Test Method Environment Conditions - Natural Convection (Still Air). Available from www.jedec.org

7.8.2 Selecting the product temperature range

When ordering the microcontroller, the temperature range is specified in the ordering information scheme shown in *Section 8: Ordering information*.

Each temperature range suffix corresponds to a specific guaranteed ambient temperature at maximum dissipation and, to a specific maximum junction temperature.

As applications do not commonly use the STM32F051xx at maximum dissipation, it is useful to calculate the exact power consumption and junction temperature to determine which temperature range will be best suited to the application.

The following examples show how to calculate the temperature range needed for a given application.

Example 1: High-performance application

Assuming the following application conditions:

Maximum ambient temperature T_{Amax} = 82 °C (measured according to JESD51-2), I_{DDmax} = 50 mA, V_{DD} = 3.5 V, maximum 20 I/Os used at the same time in output at low level with I_{OL} = 8 mA, V_{OL}= 0.4 V and maximum 8 I/Os used at the same time in output at low level with I_{OL} = 20 mA, V_{OL}= 1.3 V

P_{INTmax} = 50 mA × 3.5 V= 175 mW

P_{IOmax} = 20 × 8 mA × 0.4 V + 8 × 20 mA × 1.3 V = 272 mW

This gives: P_{INTmax} = 175 mW and P_{IOmax} = 272 mW:

P_{Dmax} = 175 + 272 = 447 mW

Using the values obtained in *Table 74* T_{Jmax} is calculated as follows:

– For LQFP64, 45 °C/W

T_{Jmax} = 82 °C + (45 °C/W × 447 mW) = 82 °C + 20.115 °C = 102.115 °C

This is within the range of the suffix 6 version parts (–40 < T_J < 105 °C) see *Table 20: General operating conditions*.

In this case, parts must be ordered at least with the temperature range suffix 6 (see *Section 8: Ordering information*).

Note: With this given P_{Dmax} we can find the T_{Amax} allowed for a given device temperature range (order code suffix 6 or 7).

Suffix 6: T_{Amax} = T_{Jmax} - (45°C/W × 447 mW) = 105-20.115 = 84.885 °C

Suffix 7: T_{Amax} = T_{Jmax} - (45°C/W × 447 mW) = 125-20.115 = 104.885 °C

Example 2: High-temperature application

Using the same rules, it is possible to address applications that run at high ambient temperatures with a low dissipation, as long as junction temperature T_J remains within the specified range.

Assuming the following application conditions:

Maximum ambient temperature T_{Amax} = 100 °C (measured according to JESD51-2), I_{DDmax} = 20 mA, V_{DD} = 3.5 V, maximum 20 I/Os used at the same time in output at low level with I_{OL} = 8 mA, V_{OL}= 0.4 V

P_{INTmax} = 20 mA × 3.5 V= 70 mW

P_{IOmax} = 20 × 8 mA × 0.4 V = 64 mW

This gives: P_{INTmax} = 70 mW and P_{IOmax} = 64 mW:

P_{Dmax} = 70 + 64 = 134 mW

Thus: P_{Dmax} = 134 mW

Using the values obtained in *Table 74* T_{Jmax} is calculated as follows:

– For LQFP64, 45 °C/W

T_{Jmax} = 100 °C + (45 °C/W × 134 mW) = 100 °C + 6.03 °C = 106.03 °C

This is above the range of the suffix 6 version parts (–40 < T_J < 105 °C).

In this case, parts must be ordered at least with the temperature range suffix 7 (see *Section 8: Ordering information*) unless we reduce the power dissipation in order to be able to use suffix 6 parts.

Refer to *Figure 55* to select the required temperature range (suffix 6 or 7) according to your ambient temperature or power requirements.

Figure 55. LQFP64 P_D max versus T_A

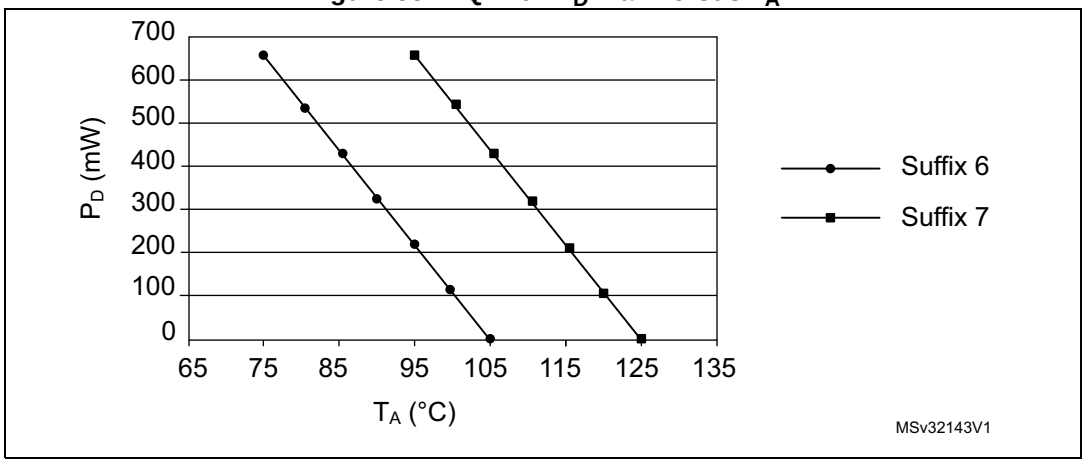

8 Ordering information

For a list of available options (memory, package, and so on) or for further information on any aspect of this device, please contact your nearest ST sales office.

Table 75. Ordering information scheme

Example: STM32 F 051 R 8 T 6 x

Device family

STM32 = ARM-based 32-bit microcontroller

Product type

F = General-purpose

Sub-family

051 = STM32F051xx

Pin count

K = 32 pins
T = 36 pins
C = 48 pins
R = 64 pins

User code memory size

4 = 16 Kbyte
6 = 32 Kbyte
8 = 64 Kbyte

Package

H = UFBGA
T = LQFP
U = UFQFPN
Y = WLCSP

Temperature range

6 = –40 °C to +85 °C
7 = –40 °C to +105 °C

Options

xxx = code ID of programmed parts (includes packing type)
TR = tape and reel packing
blank = tray packing

9 Revision history

Table 76. Document revision history

Date	Revision	Changes
05-Apr-2012	1	Initial release
25-Apr-2012	2	Updated *Table: STM32F051xx family device features and peripheral counts* for SPI and I^2C in 32-pin package. Corrected Group 3 pin order in *Table: Capacitive sensing GPIOs available on STM32F051xx devices.* Updated the current consumption values in *Section: Electrical characteristics.* Updated *Table: HSI14 oscillator characteristics*
23-Jul-2012	3	Features reorganized and *Figure: Block diagram* structure changed. Added LQFP32 package. Updated *Section: Cyclic redundancy check calculation unit (CRC).* Modified the number of priority levels in *Section: Nested vectored interrupt controller (NVIC).* Added note *3.* for PB2 and PB8, changed TIM2_CH_ETR into TIM2_CH1_ETR in *Table: Pin definitions* and *Table: Alternate functions selected through GPIOA_AFR registers for port A.* Added *Table: Alternate functions selected through GPIOB_AFR registers for port B*. Updated I_{VDD}, I_{VSS}, and $I_{INJ(PIN)}$ in *Table: Current characteristics.* Updated ACC_{HSI} in *Table: HSI oscillator characteristics* and *Table: HSI14 oscillator characteristics.* Updated *Table: I/O current injection susceptibility.* Added BOOT0 input low and high level voltage in *Table: I/O static characteristics.* Modified number of pins in V_{OL} and V_{OH} description, and changed condition for V_{OLFM+} in *Table: Output voltage characteristics.* Changed V_{DD} to V_{DDA} in *Figure: Typical connection diagram using the ADC*. Updated Ts_temp in *Table: TS characteristics.* Updated *Figure: I/O AC characteristics definition*.

Table 76. Document revision history (continued)

Date	Revision	Changes
13-Jan-2014	4	Modified datasheet title. Added packages UFQFPN48 and UFBGA64. Replaced “backup domain with “RTC domain” throughout the document. Changed SRAM value from “4 to 8 Kbyte” to “8 Kbyte” Replaced IWWDG with IWDG in *Figure: Block diagram.* Added inputs LSI and LSE to the multiplexer in *Figure: Clock tree.* Added feature “Reference clock detection” in *Section: Real-time clock (RTC) and backup registers.* Modified junction temperature in *Table: Thermal characteristics.* Renamed *Table: Internal voltage reference calibration values*. Replaced V_{DD} with V_{DDA} and V_{RERINT} with ΔV_{REFINT} in *Table: Embedded internal reference voltage.* Rephrased introduction of *Section: Touch sensing controller (TSC).* Rephrased *Section: Voltage regulator.* Added sentence “If this is used when the voltage regulator is put in low power mode...” under “Stop mode” in *Section: Low-power modes.* Removed sentence “The internal voltage reference is also connected to ADC_IN17 input channel of the ADC.” in *Section: Comparators (COMP).* Removed feature “Periodic wakeup from Stop/Standby” in *Section: Real-time clock (RTC) and backup registers.* Replaced I_{DD} with I_{DDA} in *Table: HSI oscillator characteristics, Table: HSI14 oscillator characteristics* and *Table: LSI oscillator characteristics*. Moved section “Wakeup time from low-power mode” to *Section 6.3.6* and rephrased the section. Added lines D2 and E2 in *Table: UFQFPN48 – 7 x 7 mm, 0.5 mm pitch, package mechanical data.* Added “The peripheral clock used is 48 MHz.” in Section *On-chip peripheral current consumption.*

Table 76. Document revision history (continued)

Date	Revision	Changes
13-Jan-2014	4 (continued)	Added “Negative induced leakage current is caused by negative injection and positive induced leakage current is caused by positive injection” in *Section Functional susceptibility to I/O current injection.* Replaced reference "JESD22-C101" with "ANSI/ESD STM5.3.1" in *Table : ESD absolute maximum ratings*. Merged *Table: Typical and maximum VDD consumption in Stop and Standby modes* and *Table: Typical and maximum VDDA consumption in Stop and Standby modes* into *Table: Typical and maximum current consumption in Stop and Standby modes.* Updated: – *Table: Temperature sensor calibration values,* – *Table: Internal voltage reference calibration values,* – *Table: Current characteristics,* – *Table: General operating conditions,* – *Table: Typical and maximum current consumption from the VDDA supply,* – *Table: Low-power mode wakeup timings,* – *Table: I/O current injection susceptibility,* – *Table: I/O static characteristics,* – *Table: Output voltage characteristics,* – *Table: NRST pin characteristics,* – *Table: I^2C analog filter characteristics,* – *Figure: Power supply scheme,* – *Figure: TC and TTa I/O input characteristics,* – *Figure: Five volt tolerant (FT and FTf) I/O input characteristics,* – *Figure: I/O AC characteristics definition,* – *Figure: ADC accuracy characteristics,* – *Figure: Typical connection diagram using the ADC,* – *Figure: LQFP64 – 10 x 10 mm 64 pin low-profile quad flat package outline,* – *Figure: LQFP64 recommended footprint,* – *Figure: LQFP48 – 7 x 7 mm, 48 pin low-profile quad flat package outline,* – *Figure: LQFP48 recommended footprint,* – *Figure: LQFP32 – 7 x 7 mm 32-pin low-profile quad flat package outline,* – *Figure: LQFP32 recommended footprint,* – *Figure: UFQFPN48 – 7 x 7 mm, 0.5 mm pitch, package outline.*

Table 76. Document revision history (continued)

Date	Revision	Changes
28-Aug-2015	5	Updated the following: – DAC and power management feature descriptions in *Features* – *Table 2: STM32F051xx family device features and peripheral count* – *Section 3.5.1: Power supply schemes* – *Figure 13: Power supply scheme* – *Table 17: Voltage characteristics* – *Table 20: General operating conditions:* updated the footnote for V_{IN} parameter – *Table 28: Typical and maximum current consumption from the V_{BAT} supply* – *Table 52: ADC characteristics* – *Table 33: High-speed external user clock characteristics*: replaced V_{DD} with V_{DDIOX} – *Table 34: Low-speed external user clock characteristics*: replaced V_{DD} with V_{DDIOX} – *Table 37: HSI oscillator characteristics* and *Figure 19: HSI oscillator accuracy characterization results for soldered parts* – *Table 38: HSI14 oscillator characteristics*: changed the min value for ACC_{HSI14} – *Table 41: Flash memory characteristics*: changed the values for t_{ME} and I_{DD} in write mode – *Table 43: EMS characteristics*: changed the value of V_{EFTB} – *Table 45: ESD absolute maximum ratings* – *Figure 10: STM32F051x8 memory map* – *Figure 21: TC and TTa I/O input characteristics* – *Figure 22: Five volt tolerant (FT and FTf) I/O input characteristics* – *Figure 23: I/O AC characteristics definition* – t_{START} definition in *Table 24: Embedded internal reference voltage* – t_{STAB} characteristics in *Table 52: ADC characteristics* – *Table 56: Comparator characteristics*: changed the description and values for V_{SC}, V_{DDA} and V_{REFINT} parameters. Added *Figure 28: Maximum V_{REFINT} scaler startup time from power down* – *Table 57: TS characteristics:* changed the min value for $T_{S\text{-}temp}$ – *Table 58: V_{BAT} monitoring characteristics:* changed the min value for $T_{S\text{-}vbat}$ and the typical value for R parameters – *Section 6.3.22: Communication interfaces:* updated the description and features in the subsection I^2C interface characteristics – *Table 64: I^2S characteristics:* updated the min values for data input hold time (master and slave receiver)

Table 76. Document revision history (continued)

Date	Revision	Changes
28-Aug-2015	5 (continued)	– *Table 31: Peripheral current consumption* Addition of WLCSP36 package. Updates in: – *Section 2: Description* – *Table 2: STM32F051xx family device features and peripheral count* – *Section 4: Pinouts and pin descriptions* with the addition of *Figure 7: WLCSP36 package pinout* – *Table 13: Pin definitions* – *Table 20: General operating conditions* – *Section 7: Package information* with the addition of *Section 7.5: WLCSP36 package information* – *Table 74: Package thermal characteristics* – *Section 8: Part numbering* Update of the device marking examples in *Section 7: Package information*.
16-Dec-2015	6	***Section 2: Description*:** – *Table 2: STM32F051xx family device features and peripheral count* - number of SPIs corrected for 64-pin packages – *Figure 1: Block diagram* modified ***Section 3: Functional overview*:** – *Figure 2: Clock tree* modified; divider for CEC corrected – *Table 8: Comparison of I^2C analog and digital filters* - adding 20 mA information for FastPlus mode ***Section 4: Pinouts and pin descriptions*:** – Package pinout figures updated (look and feel) – *Figure 7: WLCSP36 package pinout* - **now presented in top view** – *Table 13: Pin definitions* - notes added (VSSA corrected to pin 16 on LQFP32); note 5 added ***Section 5: Memory mapping*:** – added information on STM32F051x4/x6 difference versus STM32F051x8 map in *Figure 10* ***Section 6: Electrical characteristics*:** – *Table 24: Embedded internal reference voltage* - removed -40°C-85°C temperature range line and the associated note – *Table 48: I/O static characteristics* - removed note – *Section 6.3.16: 12-bit ADC characteristics* - changed introductory sentence – *Table 52: ADC characteristics* updated and table footnotes 3 and 4 added – *Table 56: Comparator characteristics* - VDDA min modified – *Table 59: TIMx characteristics* modified – *Table 64: I^2S characteristics* reorganized – *Figure 52: UFQFPN32 package outline* - figure footnotes added

Table 76. Document revision history (continued)

Date	Revision	Changes
06-Jan-2017	7	***Section 6: Electrical characteristics*:** – *Table 36: LSE oscillator characteristics (f_{LSE} = 32.768 kHz)* - information on configuring different drive capabilities removed. See the corresponding reference manual. – *Table 24: Embedded internal reference voltage* - V_{REFINT} values – *Table 55: DAC characteristics* - min. R_{LOAD} to V_{DDA} defined – *Figure 29: SPI timing diagram - slave mode and CPHA = 0* and *Figure 30: SPI timing diagram - slave mode and CPHA = 1* enhanced and corrected ***Section 8: Ordering information*:** – The name of the section changed from the previous “Part numbering”

IMPORTANT NOTICE – PLEASE READ CAREFULLY

STMicroelectronics NV and its subsidiaries (“ST”) reserve the right to make changes, corrections, enhancements, modifications, and improvements to ST products and/or to this document at any time without notice. Purchasers should obtain the latest relevant information on ST products before placing orders. ST products are sold pursuant to ST’s terms and conditions of sale in place at the time of order acknowledgement.

Purchasers are solely responsible for the choice, selection, and use of ST products and ST assumes no liability for application assistance or the design of Purchasers’ products.

No license, express or implied, to any intellectual property right is granted by ST herein.

Resale of ST products with provisions different from the information set forth herein shall void any warranty granted by ST for such product.

ST and the ST logo are trademarks of ST. All other product or service names are the property of their respective owners.

Information in this document supersedes and replaces information previously supplied in any prior versions of this document.

© 2017 STMicroelectronics – All rights reserved