STM32H730AB STM32H730IB STM32H730VB STM32H730ZB

Arm® Cortex®-M7 32b 550 MHz MCU, 128 KB flash, 564 KB RAM, Ethernet, USB, 3xFD-CAN, Graphics, 2x 16-bit ADCs, crypto/hash

Datasheet - production data

Features

Includes ST state-of-the-art patented technology

Core

- 32-bit Arm® Cortex®-M7 CPU with DP-FPU, L1 cache: 32-Kbyte data cache and 32-Kbyte instruction cache allowing 0-wait state execution from embedded flash memory and external memories, frequency up to 550 MHz, MPU, 1177 DMIPS/2.14 DMIPS/MHz (Dhrystone 2.1), and DSP instructions

Memories

- 128 Kbytes of embedded flash memory with ECC
- SRAM: total 564 Kbytes all with ECC, including 128 Kbytes of data TCM RAM for critical real-time data + 432 Kbytes of system RAM (up to 256 Kbytes can remap on instruction TCM RAM for critical real time instructions) + 4 Kbytes of backup SRAM (available in the lowest-power modes)
- Flexible external memory controller with up to 24-bit data bus: SRAM, PSRAM, SDRAM/LPSDR SDRAM, NOR/NAND memories
- 2 x Octo-SPI interface with XiP and on-the-fly decryption support
- 2 x SD/SDIO/MMC interface
- Bootloader with security services support (SFI and SB-SFU)

Graphics

- Chrom-ART Accelerator graphical hardware accelerator enabling enhanced graphical user interface to reduce CPU load
- LCD-TFT controller supporting up to XGA resolution

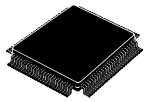

LQFP100 (14 x 14 mm)
LQFP144 (20 x 20 mm)
LQFP176 (24 x 24 mm)

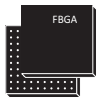

TFBGA100 (8 x 8 mm)



UFBGA144 (7 x 7 mm)
UFBGA 169 (7 x 7 mm)
UFBGA 176+25 (10 x 10 mm)

Clock, reset and supply management

- 1.62 V to 3.6 V application supply and I/O
- POR, PDR, PVD and BOR
- Dedicated USB power
- Embedded DCDC and LDO regulator
- Internal oscillators: 64 MHz HSI, 48 MHz HSI48, 4 MHz CSI, 32 kHz LSI
- External oscillators: 4-50 MHz HSE, 32.768 kHz LSE

Low power

- Sleep, Stop and Standby modes
- V_{BAT} supply for RTC, 32×32-bit backup registers

Analog

- 2×16-bit ADC, up to 3.6 MSPS in 16-bit: up to 22 channels and 7.2 MSPS in double-interleaved mode
- 1 x 12-bit ADC, up to 5 MSPS in 12-bit, up to 12 channels
- 2 x comparators
- 2 x operational amplifier GBW = 8 MHz

- 2× 12-bit D/A converters

Digital filters for sigma delta modulator (DFSDM)

- 8 channels/4 filters

4 DMA controllers to offload the CPU

- 1 × MDMA with linked list support
- 2 × dual-port DMAs with FIFO
- 1 × basic DMA with request router capabilities

24 timers

- Seventeen 16-bit (including 5 x low power 16-bit timer available in stop mode) and four 32-bit timers, each with up to 4 IC/OC/PWM or pulse counter and quadrature (incremental) encoder input
- 2x watchdogs, 1x SysTick timer

Debug mode

- SWD and JTAG interfaces
- 2-Kbyte embedded trace buffer

Up to 128 I/O ports with interrupt capability

Up to 35 communication interfaces

- Up to 5 × I2C FM+ interfaces (SMBus/PMBus™)
- Up to 5 USARTs/5 UARTs (ISO7816 interface, LIN, IrDA, modem control) and 1 x LPUART
- Up to 6 SPIs with 4 with muxed duplex I2S for audio class accuracy via internal audio PLL or external clock and up to 5 x SPI (from 5 x USART when configured in synchronous mode)
- 2x SAI (serial audio interface)
- 1× FD/TT-CAN and 2x FD-CAN
- 8- to 14-bit camera interface
- 16-bit parallel slave synchronous interface
- SPDIF-IN interface
- HDMI-CEC
- Ethernet MAC interface with DMA controller
- USB 2.0 high-speed/full-speed device/host/OTG controller with dedicated DMA, on-chip FS PHY and ULPI for external HS PHY
- SWPMI single-wire protocol master I/F
- MDIO slave interface

Mathematical acceleration

- CORDIC for trigonometric functions acceleration
- FMAC: Filter mathematical accelerator

Digital temperature sensor

Cryptographic/HASH acceleration

- AES 128, 192, 256, TDES, HASH (MD5, SHA-1, SHA-2), HMAC
- 2x OTFDEC AES-128 in CTR mode for Octo-SPI memory encryption/decryption

True random number generator

CRC calculation unit

RTC with subsecond accuracy and hardware calendar

ROP, PC-ROP, tamper detection, secure firmware upgrade support

96-bit unique ID

All packages are ECOPACK2 compliant

Contents

1 Introduction 14

2 Description 15

3 Functional overview 22

3.1 Arm® Cortex®-M7 with FPU 22

3.2 Memory protection unit (MPU) 22

3.3 Memories 23

3.3.1 Embedded flash memory 23

3.3.2 Embedded SRAM 23

Error code correction (ECC) 24

3.4 Secure access mode 24

3.5 Boot modes 25

3.6 CORDIC coprocessor (CORDIC) 25

CORDIC features 25

3.7 Filter mathematical accelerator (FMAC) 26

FMAC features 26

3.8 Power supply management 26

3.8.1 Power supply scheme 26

3.8.2 Power supply supervisor 28

3.8.3 Voltage regulator 29

3.9 Low-power strategy 29

3.10 Reset and clock controller (RCC) 30

3.10.1 Clock management 30

3.10.2 System reset sources 31

3.11 General-purpose input/outputs (GPIOs) 31

3.12 Bus-interconnect matrix 31

3.13 DMA controllers 33

3.14 Chrom-ART Accelerator (DMA2D) 33

3.15 Nested vectored interrupt controller (NVIC) 34

3.16 Extended interrupt and event controller (EXTI) 34

3.17 Cyclic redundancy check calculation unit (CRC) 34

3.18 Flexible memory controller (FMC) 35

3.19 Octo-SPI memory interface (OCTOSPI) . . . 35
3.20 Analog-to-digital converters (ADCs) . . . 36
3.21 Temperature sensor . . . 36
3.22 Digital temperature sensor (DTS) . . . 36
3.23 V_{BAT} operation . . . 37
3.24 Digital-to-analog converters (DAC) . . . 37
3.25 Ultra-low-power comparators (COMP) . . . 38
3.26 Operational amplifiers (OPAMP) . . . 38
3.27 Digital filter for sigma-delta modulators (DFSDM) . . . 39
3.28 Digital camera interface (DCMI) . . . 41
3.29 PSSI . . . 41
3.30 LCD-TFT controller . . . 41
3.31 True random number generator (RNG) . . . 42
3.32 Cryptographic acceleration (CRYP and HASH) . . . 42
3.33 On-the-fly decryption engine (OTFDEC) . . . 42
3.34 Timers and watchdogs . . . 44
3.34.1 Advanced-control timers (TIM1, TIM8) . . . 46
3.34.2 General-purpose timers (TIMx) . . . 46
3.34.3 Basic timers TIM6 and TIM7 . . . 47
3.34.4 Low-power timers (LPTIM1, LPTIM2, LPTIM3, LPTIM4, LPTIM5) . . . 47
3.34.5 Independent watchdog . . . 47
3.34.6 Window watchdog . . . 47
3.34.7 SysTick timer . . . 47
3.35 Real-time clock (RTC), backup SRAM and backup registers . . . 48
3.36 Inter-integrated circuit interface (I^2C) . . . 49
3.37 Universal synchronous/asynchronous receiver transmitter (USART) . . . 49
3.38 Low-power universal asynchronous receiver transmitter (LPUART) . . . 50
3.39 Serial peripheral interface (SPI)/inter- integrated sound interfaces (I2S) . 51
3.40 Serial audio interfaces (SAI) . . . 51
3.41 SPDIFRX Receiver Interface (SPDIFRX) . . . 52
3.42 Single wire protocol master interface (SWPMI) . . . 52
3.43 Management data input/output (MDIO) slaves . . . 53
3.44 SD/SDIO/MMC card host interfaces (SDMMC) . . . 53
3.45 Controller area network (FDCAN1, FDCAN2, FDCAN3) . . . 53

3.46 Universal serial bus on-the-go high-speed (OTG_HS) 54
3.47 Ethernet MAC interface with dedicated DMA controller (ETH) 54
3.48 High-definition multimedia interface (HDMI) - consumer electronics control (CEC) 55
3.49 Debug infrastructure 55

4 Memory mapping 56

5 Pinouts, pin descriptions and alternate functions 57

6 Electrical characteristics 103
6.1 Parameter conditions 103
6.1.1 Minimum and maximum values 103
6.1.2 Typical values 103
6.1.3 Typical curves 103
6.1.4 Loading capacitor 103
6.1.5 Pin input voltage 103
6.1.6 Power supply scheme 104
6.1.7 Current consumption measurement 105
6.2 Absolute maximum ratings 105
6.3 Operating conditions 107
6.3.1 General operating conditions 107
6.3.2 VCAP external capacitor 110
6.3.3 SMPS step-down converter 110
6.3.4 Operating conditions at power-up / power-down 114
6.3.5 Embedded reset and power control block characteristics 115
6.3.6 Embedded reference voltage characteristics 116
6.3.7 Embedded USB regulator characteristics 117
6.3.8 Supply current characteristics 117
Typical and maximum current consumption 118
Typical SMPS efficiency versus load current and temperature 125
I/O system current consumption 127
On-chip peripheral current consumption 128
6.3.9 Wake-up time from low-power modes 135
6.3.10 External clock source characteristics 136
High-speed external user clock generated from an external source 136
Low-speed external user clock generated from an external source 137
High-speed external clock generated from a crystal/ceramic resonator 138

Low-speed external clock generated from a crystal/ceramic resonator 139
6.3.11 Internal clock source characteristics 140
48 MHz high-speed internal RC oscillator (HSI48) 140
64 MHz high-speed internal RC oscillator (HSI) 141
4 MHz low-power internal RC oscillator (CSI) 142
Low-speed internal (LSI) RC oscillator 142
6.3.12 PLL characteristics 143
6.3.13 Memory characteristics 147
Flash memory 147
6.3.14 EMC characteristics 148
Functional EMS (electromagnetic susceptibility) 148
Designing hardened software to avoid noise problems 148
Electromagnetic Interference (EMI) 149
6.3.15 Absolute maximum ratings (electrical sensitivity) 150
Electrostatic discharge (ESD) 150
Static latchup 150
6.3.16 I/O current injection characteristics 151
Functional susceptibility to I/O current injection 151
6.3.17 I/O port characteristics 151
General input/output characteristics 151
Output driving current 153
Output voltage levels 154
Output buffer timing characteristics (HSLV option disabled) 156
Output buffer timing characteristics (HSLV option enabled) 158
Analog switch between ports Pxy_C and Pxy 159
6.3.18 NRST pin characteristics 159
6.3.19 FMC characteristics 160
Asynchronous waveforms and timings 160
Synchronous waveforms and timings 168
NAND controller waveforms and timings 176
SDRAM waveforms and timings 178
6.3.20 Octo-SPI interface characteristics 181
6.3.21 Delay block (DLYB) characteristics 186
6.3.22 16-bit ADC characteristics 186
General PCB design guidelines 194
6.3.23 12-bit ADC characteristics 195
6.3.24 DAC characteristics 201
6.3.25 Voltage reference buffer characteristics 205
6.3.26 Analog temperature sensor characteristics 206
6.3.27 Digital temperature sensor characteristics 207

6.3.28 Temperature and V_{BAT} monitoring . . . 207
6.3.29 Voltage booster for analog switch . . . 208
6.3.30 Comparator characteristics . . . 208
6.3.31 Operational amplifier characteristics . . . 209
6.3.32 Digital filter for Sigma-Delta Modulators (DFSDM) characteristics . . . 212
6.3.33 Camera interface (DCMI) timing specifications . . . 214
6.3.34 Parallel synchronous slave interface (PSSI) characteristics . . . 215
6.3.35 LCD-TFT controller (LTDC) characteristics . . . 216
6.3.36 Timer characteristics . . . 218
6.3.37 Low-power timer characteristics . . . 218
6.3.38 Communication interfaces . . . 219
I2C interface characteristics . . . 219
USART interface characteristics . . . 220
SPI interface characteristics . . . 222
I2S Interface characteristics . . . 225
SAI characteristics . . . 227
MDIO characteristics . . . 229
SD/SDIO MMC card host interface (SDMMC) characteristics . . . 230
USB OTG_FS characteristics . . . 232
USB OTG_HS characteristics . . . 233
Ethernet interface characteristics . . . 234
JTAG/SWD interface characteristics . . . 236

7 Package information . . . 239
7.1 Device marking . . . 239
7.2 LQFP100 package information (1L) . . . 239
Notes: . . . 242
7.3 TFBGA100 package information (A08Q) . . . 243
Notes: . . . 244
7.4 LQFP144 package information (1A) . . . 246
Notes: . . . 248
7.5 UFBGA144 package information . . . 250
7.6 UFBGA169 package information (A0YV) . . . 251
7.7 LQFP176 package information (1T) . . . 254
Notes: . . . 256
7.8 UFBGA(176+25) package information (A0E7) . . . 258
7.9 Thermal characteristics . . . 260
7.9.1 Reference documents . . . 261

8 Ordering information 262

9 Important security notice 263

10 Revision history 264

List of tables

Table 1. STM32H730xB features and peripheral counts . . . 18
Table 2. System versus domain low-power mode . . . 30
Table 3. DFSDM implementation . . . 40
Table 4. Timer feature comparison . . . 44
Table 5. USART features . . . 50
Table 6. Legend/abbreviations used in the pinout table . . . 63
Table 7. STM32H730xB pin and ball descriptions . . . 64
Table 8. STM32H730xB pin alternate functions . . . 88
Table 9. Voltage characteristics . . . 105
Table 10. Current characteristics . . . 106
Table 11. Thermal characteristics . . . 106
Table 12. General operating conditions . . . 107
Table 13. Supply voltage and maximum temperature configuration . . . 109
Table 14. VCAP operating conditions . . . 110
Table 15. Characteristics of SMPS step-down converter external components . . . 111
Table 16. SMPS step-down converter characteristics for external usage . . . 111
Table 17. Inrush current and inrush electric charge characteristics for LDO and SMPS . . . 112
Table 18. Operating conditions at power-up/power-down . . . 114
Table 19. Reset and power control block characteristics . . . 115
Table 20. Embedded reference voltage . . . 116
Table 21. Internal reference voltage calibration values . . . 117
Table 22. USB regulator characteristics . . . 117
Table 23. Typical and maximum current consumption in Run mode, code with data processing running from ITCM . . . 119
Table 24. Typical and maximum current consumption in Run mode, code with data processing running from flash memory, cache ON . . . 120
Table 25. Typical and maximum current consumption in Run mode, code with data processing running from flash memory, cache OFF . . . 121
Table 26. Typical consumption in Run mode and corresponding performance versus code position . . . 122
Table 27. Typical current consumption in Autonomous mode . . . 122
Table 28. Typical and maximum current consumption in Sleep mode . . . 122
Table 29. Typical and maximum current consumption in System Stop mode . . . 123
Table 30. Typical and maximum current consumption in Standby mode . . . 124
Table 31. Typical and maximum current consumption in VBAT mode . . . 124
Table 32. Peripheral current consumption in Run mode . . . 128
Table 33. Low-power mode wakeup timings . . . 135
Table 34. High-speed external user clock characteristics . . . 136
Table 35. Low-speed external user clock characteristics . . . 137
Table 36. 4-50 MHz HSE oscillator characteristics . . . 138
Table 37. Low-speed external user clock characteristics . . . 139
Table 38. HSI48 oscillator characteristics . . . 140
Table 39. HSI oscillator characteristics . . . 141
Table 40. CSI oscillator characteristics . . . 142
Table 41. LSI oscillator characteristics . . . 142
Table 42. PLL1 characteristics (wide VCO frequency range) . . . 143
Table 43. PLL1 characteristics (medium VCO frequency range) . . . 144
Table 44. PLL2 and PLL3 characteristics (wide VCO frequency range) . . . 145

Table 45. PLL2 and PLL3 characteristics (medium VCO frequency range) . . . 146
Table 46. Flash memory characteristics . . . 147
Table 47. Flash memory programming . . . 147
Table 48. Flash memory endurance and data retention . . . 147
Table 49. EMS characteristics . . . 148
Table 50. EMI characteristics for fHSE = 8 MHz and fCPU = 550 MHz . . . 149
Table 51. ESD absolute maximum ratings . . . 150
Table 52. Electrical sensitivities . . . 150
Table 53. I/O current injection susceptibility . . . 151
Table 54. I/O static characteristics . . . 152
Table 55. Output voltage characteristics for all I/Os except PC13, PC14 and PC15 . . . 154
Table 56. Output voltage characteristics for PC13, PC14 and PC15 . . . 155
Table 57. Output timing characteristics (HSLV OFF) . . . 156
Table 58. Output timing characteristics (HSLV ON) . . . 158
Table 59. Pxy_C and Pxy analog switch characteristics . . . 159
Table 60. NRST pin characteristics . . . 159
Table 61. Asynchronous non-multiplexed SRAM/PSRAM/NOR read timings . . . 161
Table 62. Asynchronous non-multiplexed SRAM/PSRAM/NOR read-NWAIT timings . . . 161
Table 63. Asynchronous non-multiplexed SRAM/PSRAM/NOR write timings . . . 163
Table 64. Asynchronous non-multiplexed SRAM/PSRAM/NOR write-NWAIT timings . . . 163
Table 65. Asynchronous multiplexed PSRAM/NOR read timings . . . 165
Table 66. Asynchronous multiplexed PSRAM/NOR read-NWAIT timings . . . 165
Table 67. Asynchronous multiplexed PSRAM/NOR write timings . . . 167
Table 68. Asynchronous multiplexed PSRAM/NOR write-NWAIT timings . . . 167
Table 69. Synchronous non-multiplexed NOR/PSRAM read timings . . . 168
Table 70. Synchronous non-multiplexed PSRAM write timings . . . 170
Table 71. Synchronous multiplexed NOR/PSRAM read timings . . . 172
Table 72. Synchronous multiplexed PSRAM write timings . . . 174
Table 73. Switching characteristics for NAND flash read cycles . . . 176
Table 74. Switching characteristics for NAND flash write cycles . . . 177
Table 75. SDRAM read timings . . . 178
Table 76. LPSDR SDRAM read timings . . . 179
Table 77. SDRAM Write timings . . . 180
Table 78. LPSDR SDRAM Write timings . . . 180
Table 79. OCTOSPI characteristics in SDR mode . . . 182
Table 80. OCTOSPI characteristics in DTR mode (no DQS) . . . 183
Table 81. OCTOSPI characteristics in DTR mode (with DQS)/Octal and Hyperbus . . . 184
Table 82. Delay Block characteristics . . . 186
Table 83. 16-bit ADC characteristics . . . 186
Table 84. Minimum sampling time vs RAIN (16-bit ADC) . . . 190
Table 85. 16-bit ADC accuracy . . . 192
Table 86. 12-bit ADC characteristics . . . 195
Table 87. Minimum sampling time vs RAIN (12-bit ADC) . . . 198
Table 88. 12-bit ADC accuracy . . . 200
Table 89. DAC characteristics . . . 201
Table 90. DAC accuracy . . . 203
Table 91. VREFBUF characteristics . . . 205
Table 92. Temperature sensor characteristics . . . 206
Table 93. Temperature sensor calibration values . . . 206
Table 94. Digital temperature sensor characteristics . . . 207
Table 95. V_{BAT} monitoring characteristics . . . 207
Table 96. V_{BAT} charging characteristics . . . 207

Table 97. Temperature monitoring characteristics . . . 208
Table 98. Voltage booster for analog switch characteristics . . . 208
Table 99. COMP characteristics . . . 208
Table 100. Operational amplifier characteristics . . . 209
Table 101. DFSDM measured timing . . . 212
Table 102. DCMI characteristics . . . 214
Table 103. PSSI transmit characteristics . . . 215
Table 104. PSSI receive characteristics . . . 215
Table 105. LTDC characteristics . . . 216
Table 106. TIMx characteristics . . . 218
Table 107. LPTIMx characteristics . . . 218
Table 108. Minimum i2c_ker_ck frequency in all I2C modes . . . 219
Table 109. I2C analog filter characteristics . . . 219
Table 110. USART characteristics . . . 220
Table 111. SPI characteristics . . . 222
Table 112. I^2S dynamic characteristics . . . 225
Table 113. SAI characteristics . . . 227
Table 114. MDIO slave timing parameters . . . 229
Table 115. Dynamics characteristics: SD / MMC characteristics, VDD = 2.7 to 3.6 V . . . 230
Table 116. Dynamics characteristics: eMMC characteristics VDD = 1.71V to 1.9V . . . 231
Table 117. USB OTG_FS electrical characteristics . . . 233
Table 118. Dynamics characteristics: USB ULPI . . . 233
Table 119. Dynamics characteristics: Ethernet MAC signals for SMI . . . 234
Table 120. Dynamics characteristics: Ethernet MAC signals for RMII . . . 235
Table 121. Dynamics characteristics: Ethernet MAC signals for MII . . . 236
Table 122. Dynamics JTAG characteristics . . . 237
Table 123. Dynamics SWD characteristics . . . 237
Table 124. LQFP100 - Mechanical data . . . 240
Table 125. TFBGA100 - Mechanical data . . . 244
Table 126. TFBGA100 - Example of PCB design rules (0.8 mm pitch BGA) . . . 245
Table 127. LQFP144 - Mechanical data . . . 247
Table 128. UFBGA - 144 balls, 7 x 7 mm, 0.50 mm pitch, ultra fine pitch ball grid array package mechanical data . . . 250
Table 129. UFBGA144 recommended PCB design rules (0.50 mm pitch BGA) . . . 251
Table 130. UFBGA169 - Mechanical data . . . 252
Table 131. UFBGA169 - Example of PCB design rules (0.5 mm pitch BGA) . . . 253
Table 132. LQFP176 - Mechanical data . . . 255
Table 133. UFBGA(176+25) - Mechanical data . . . 258
Table 134. UFBGA(176+25) - Example of PCB design rules (0.65 mm pitch BGA) . . . 259
Table 135. Thermal characteristics . . . 260
Table 136. Document revision history . . . 264

List of figures

Figure 1. STM32H730xB block diagram . . . 17
Figure 2. Power-up/power-down sequence . . . 27
Figure 3. STM32H730xB bus matrix . . . 32
Figure 4. TFBGA100 pinout (without SMPS) . . . 57
Figure 5. LQFP100 pinout (without SMPS) . . . 58
Figure 6. TFBGA144 ballout (without SMPS) . . . 59
Figure 7. LQFP144 pinout (without SMPS) . . . 60
Figure 8. LQFP176 pinout (with SMPS) . . . 61
Figure 9. UFBGA169 ballout (with SMPS) . . . 62
Figure 10. UFBGA176+25 ballout (with SMPS) . . . 62
Figure 11. Pin loading conditions . . . 103
Figure 12. Pin input voltage . . . 103
Figure 13. Power supply scheme . . . 104
Figure 14. Current consumption measurement scheme . . . 105
Figure 15. External capacitor C_{EXT} . . . 110
Figure 16. External components for SMPS step-down converter . . . 111
Figure 17. Typical SMPS efficiency (%) vs load current (A) in Run mode at TJ = 30 °C . . . 125
Figure 18. Typical SMPS efficiency (%) vs load current (A) in Run mode at TJ = TJmax . . . 125
Figure 19. Typical SMPS efficiency (%) vs load current (A) in Stop and DStop modes at TJ = 30 °C . . . 126
Figure 20. Typical SMPS efficiency (%) vs load current (A) in low-power mode at TJ = TJmax . . . 126
Figure 21. High-speed external clock source AC timing diagram . . . 136
Figure 22. Low-speed external clock source AC timing diagram . . . 137
Figure 23. Typical application with an 8 MHz crystal . . . 139
Figure 24. Typical application with a 32.768 kHz crystal . . . 140
Figure 25. VIL/VIH for all I/Os except BOOT0 . . . 153
Figure 26. Recommended NRST pin protection . . . 160
Figure 27. Asynchronous non-multiplexed SRAM/PSRAM/NOR read waveforms . . . 162
Figure 28. Asynchronous non-multiplexed SRAM/PSRAM/NOR write waveforms . . . 164
Figure 29. Asynchronous multiplexed PSRAM/NOR read waveforms . . . 166
Figure 30. Synchronous non-multiplexed NOR/PSRAM read timings . . . 169
Figure 31. Synchronous non-multiplexed PSRAM write timings . . . 171
Figure 32. Synchronous multiplexed NOR/PSRAM read timings . . . 173
Figure 33. Synchronous multiplexed PSRAM write timings . . . 175
Figure 34. NAND controller waveforms for read access . . . 177
Figure 35. NAND controller waveforms for write access . . . 178
Figure 36. SDRAM read access waveforms (CL = 1) . . . 179
Figure 37. SDRAM write access waveforms . . . 181
Figure 38. OCTOSPI SDR read/write timing diagram . . . 182
Figure 39. OCTOSPI DTR mode timing diagram . . . 183
Figure 40. OCTOSPI Hyperbus clock timing diagram . . . 185
Figure 41. OCTOSPI Hyperbus read timing diagram . . . 185
Figure 42. OCTOSPI Hyperbus write timing diagram . . . 186
Figure 43. ADC accuracy characteristics . . . 193
Figure 44. Typical connection diagram when using the ADC with FT/TT pins featuring analog switch function193
Figure 45. Power supply and reference decoupling (V_{REF+} not connected to V_{DDA}) . . . 194
Figure 46. Power supply and reference decoupling (V_{REF+} connected to V_{DDA}) . . . 194

Figure 47. 12-bit buffered /non-buffered DAC . . . 204
Figure 48. Channel transceiver timing diagrams . . . 213
Figure 49. DCMI timing diagram . . . 214
Figure 50. LCD-TFT horizontal timing diagram . . . 217
Figure 51. LCD-TFT vertical timing diagram . . . 217
Figure 52. USART timing diagram in master mode . . . 221
Figure 53. USART timing diagram in slave mode . . . 221
Figure 54. SPI timing diagram - slave mode and CPHA = 0 . . . 223
Figure 55. SPI timing diagram - slave mode and CPHA = 1 . . . 224
Figure 56. SPI timing diagram - master mode . . . 224
Figure 57. I^2S slave timing diagram (Philips protocol)(1) . . . 226
Figure 58. I^2S master timing diagram (Philips protocol)(1) . . . 226
Figure 59. SAI master timing waveforms . . . 228
Figure 60. SAI slave timing waveforms . . . 229
Figure 61. MDIO slave timing diagram . . . 230
Figure 62. SD high-speed mode . . . 232
Figure 63. SD default mode . . . 232
Figure 64. SDMMC DDR mode . . . 232
Figure 65. ULPI timing diagram . . . 234
Figure 66. Ethernet SMI timing diagram . . . 235
Figure 67. Ethernet RMII timing diagram . . . 235
Figure 68. Ethernet MII timing diagram . . . 236
Figure 69. JTAG timing diagram . . . 237
Figure 70. SWD timing diagram . . . 238
Figure 71. LQFP100 - Outline(15) . . . 240
Figure 72. LQFP100 - Footprint example . . . 242
Figure 73. TFBGA100 - Outline(13) . . . 243
Figure 74. TFBGA100 - Footprint example . . . 245
Figure 75. LQFP144 - Outline(15) . . . 246
Figure 76. LQFP144 - Footprint example . . . 249
Figure 77. UFBGA - 144 balls, 7 x 7 mm, 0.50 mm pitch, ultra fine pitch ball grid array package outline . . . 250
Figure 78. UFBGA - 144 balls, 7 x 7 mm, 0.50 mm pitch, ultra fine pitch ball grid array package recommended footprint . . . 251
Figure 79. UFBGA169 - Outline . . . 252
Figure 80. UFBGA169 - Footprint example . . . 253
Figure 81. LQFP176 - Outline(15) . . . 254
Figure 82. LQFP176 - Footprint example . . . 257
Figure 83. UFBGA(176+25) - Outline . . . 258
Figure 84. UFBGA(176+25) - Footprint example . . . 259

1 Introduction

This document provides information on STM32H730xB microcontrollers, such as description, functional overview, pin assignment and definition, packaging, and ordering information.

This document should be read in conjunction with the STM32H730xB reference manual (RM0468), available from the STMicroelectronics website *www.st.com*.

STMicroelectronicsFor information on the Arm®(a) Cortex®-M7 core, refer to the Cortex®-M7 Technical Reference Manual, available from the http://www.arm.com website.

a. Arm is a registered trademark of Arm Limited (or its subsidiaries) in the US and/or elsewhere.

2 Description

STM32H730xB devices are based on the high-performance Arm® Cortex®-M7 32-bit RISC core operating at up to 550 MHz. The Cortex® -M7 core features a floating-point unit (FPU) which supports Arm® double-precision (IEEE 754 compliant) and single-precision data-processing instructions and data types. The Cortex -M7 core includes 32 Kbytes of instruction cache and 32 Kbytes of data cache. STM32H730xB devices support a full set of DSP instructions and a memory protection unit (MPU) to enhance application security.

STM32H730xB devices incorporate high-speed embedded memories with 128 Kbytes of flash memory, up to 564 Kbytes of RAM (including 192 Kbytes that can be shared between ITCM and AXI, plus 64 Kbytes exclusively ITCM, plus 128 Kbytes exclusively AXI, 128 Kbyte DTCM, 48 Kbytes AHB and 4 Kbytes of backup RAM), as well as an extensive range of enhanced I/Os and peripherals connected to APB buses, AHB buses, 2x32-bit multi-AHB bus matrix and a multilayer AXI interconnect supporting internal and external memory access. To improve application robustness, all memories feature error code correction (one error correction, two error detections).

The devices embed peripherals allowing mathematical/arithmetic function acceleration (CORDIC coprocessor for trigonometric functions and FMAC unit for filter functions). All the devices offer three ADCs, two DACs, two operational amplifiers, two ultra-low-power comparators, a low-power RTC, four general-purpose 32-bit timers, 12 general-purpose 16-bit timers including two PWM timers for motor control, five low-power timers, a true random number generator (RNG), and a cryptographic acceleration cell, and a HASH processor. The devices support four digital filters for external sigma-delta modulators (DFSDM). They also feature standard and advanced communication interfaces.

- Standard peripherals
  - Five I^2Cs
  - Five USARTs, five UARTs, and one LPUART
  - Six SPIs, four I^2Ss. To achieve audio class accuracy, the I^2S peripherals can be clocked by a dedicated internal audio PLL or by an external clock to allow synchronization (note that the five USARTs also provide SPI slave capability).
  - Two SAI serial audio interfaces
  - One SPDIFRX interface with four inputs
  - One SWPMI (Single Wire Protocol Master Interface)
  - Management Data Input/Output (MDIO) slaves
  - Two SDMMC interfaces
  - A USB OTG high-speed interface with full-speed capability (with the ULPI)
  - Two FDCANs plus one TT-FDCAN interface
  - An Ethernet interface
  - Chrom-ART Accelerator
  - HDMI-CEC

- Advanced peripherals including
  - A flexible memory control (FMC) interface
  - Two Octo-SPI memory interfaces with on-the-fly decryption (OTFDEC)
  - A camera interface for CMOS sensors
  - An LCD-TFT display controller

Refer to *Table 1: STM32H730xB features and peripheral counts* for the list of peripherals available on each part number.

To reduce the power consumption some STM32H730xB devices include an optional step-down converter that can be used either for internal or external supply, or both.

STM32H730xB devices operate in the –40 to +85 °C ambient temperature range from a 1.62 to 3.6 V power supply. The supply voltage can drop down to 1.62 V by using an external power supervisor (see *Section 3.8.2: Power supply supervisor)* and connecting the PDR_ON pin to V_{SS}. Otherwise, the supply voltage must stay above 1.71 V with the embedded power voltage detector enabled.

Dedicated supply inputs for USB are available to allow a greater power supply choice.

A comprehensive set of power-saving modes allows the design of low-power applications.

STM32H730xB devices are offered in several packages ranging from 100 to 176 pins/balls. The set of included peripherals changes with the device chosen.

These features make STM32H730xB microcontrollers suitable for a wide range of applications:

- Motor drive and application control
- Medical equipment
- Industrial applications: PLC, inverters, circuit breakers
- Printers, and scanners
- Alarm systems, video intercom, and HVAC
- Home audio appliances
- Mobile applications, Internet of Things
- Wearable devices: smart watches.

Figure 1 shows the device block diagram.

Figure 1. STM32H730xB block diagram

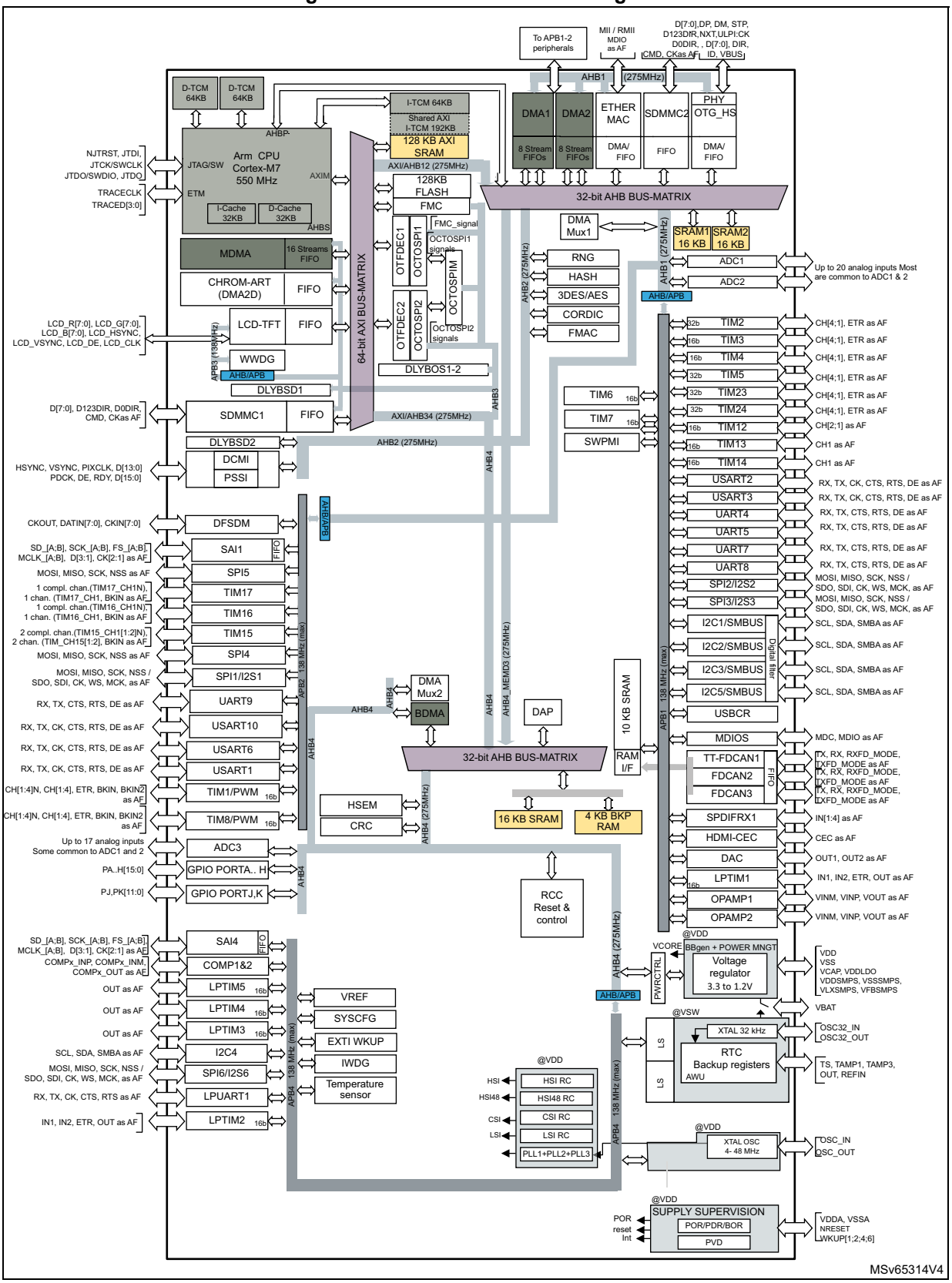

Table 1. STM32H730xB features and peripheral counts

Peripherals		no SMPS				SMPS		
		STM32H730VBT6	STM32H730VBH6	STM32H730ZBT6	STM32H730ZBI6	STM32H730ABI6Q	STM32H730IBK6Q	STM32H730IBT6Q
Flash memory (Kbytes)		128						
SRAM (Kbytes)	SRAM mapped onto AXI bus	128						
	SRAM1 (D2 domain)	16						
	SRAM2 (D2 domain)	16						
	SRAM4 (D3 domain)	16						
RAM shared between ITCM and AXI (Kbytes)		192						
TCM RAM in Kbytes	ITCM RAM (instruction)	64						
	DTCM RAM (data)	128						
Backup SRAM (Kbytes)		4						
FMC	Interface	1						
	NOR flash memory/RAM controller	-	-	yes	yes	yes	yes	yes
	Multiplexed I/O NOR flash memory	yes	yes	yes	yes	yes	yes	yes
	16-bit NAND flash memory	yes	yes	yes	yes	yes	yes	yes
	16-bit SDRAM controller	-	-	yes	yes	yes	yes	yes
	24-bit SDRAM controller(1)	-	-	-	-	-	yes	-
GPIO		80		112	114	121	128	119
Octo-SPI interface		1	1	2	2	2	2	2

Table 1. STM32H730xB features and peripheral counts (continued)

Peripherals		no SMPS				SMPS		
		STM32H730VBT6	STM32H730VBH6	STM32H730ZBT6	STM32H730ZBI6	STM32H730ABI6Q	STM32H730IBK6Q	STM32H730IBT6Q
OTFDEC		yes						
Cordic		yes						
FMAC		yes						
Timers	General purpose 32 bits	4	4	4	4	4	4	4
	General purpose 16 bits	10	10	10	10	10	10	10
	Advanced control (PWM)	2	2	2	2	2	2	2
	Basic	2	2	2	2	2	2	2
	Low-power	5	5	5	5	5	5	5
	RTC	1	1	1	1	1	1	1
	Window watchdog / independent watchdog	2	2	2	2	2	2	2
Wakeup pins		4	4	4	4	4	4	4
Tamper pins		2	2	2	2	2	2	2
Random number generator		yes						
Cryptographic accelerator		yes						

Table 1. STM32H730xB features and peripheral counts (continued)

Peripherals		no SMPS				SMPS		
		STM32H730VBT6	STM32H730VBH6	STM32H730ZBT6	STM32H730ZBI6	STM32H730ABI6Q	STM32H730IBK6Q	STM32H730IBT6Q
Communication interfaces	SPI / I2S	5/4	5/4	6/4	6/4	6/4	6/4	6/4
	I2C	5	5	5	5	5	5	5
	USART/UART/ LPUART	5/5/1	5/5/1	5/5/1	5/5/1	5/5/1	5/5/1	5/5/1
	SAI/PDM	2/2(2)	2/2(2)	2/2	2/2	2/2	2/2	2/2
	SPDIFRX	1						
	HDMI-CEC	1						
	SWPMI	1						
	MDIO	1						
	SDMMC	2						
	FDCAN/TT-FDCAN	2/1	2/1	2/1	2/1	2/1	2/1	2/1
	USB [OTG_HS(ULPI)/ FS(PHY)]	1 [1/1]	1 [1/1]	1 [1/1]	1 [1/1]	1 [1/1]	1 [1/1]	1 [1/1]
	Ethernet [MII/RMII]	1 [0/1]	1 [0/1]	1 [0/1]	1 [1/1]	1 [1/1]	1 [0/1]	1 [1/1]
Camera interface/PSSI		yes						
LCD-TFT		yes						
Chrom-ART Accelerator (DMA2D)		yes						
16-bit ADCs	Number of ADCs	2						
	Number of Direct channels ADC1/ADC2	0	2/2	0	2/2	2/2	2/2	0
	Number of Fast channels ADC1/ADC2	3/2	3/2	4/3	4/3	6/5	6/5	4/3
	Number of Slow channels ADC1/ADC2	11/10	9/8	12/11	12/11	12/11	12/11	12/11

Table 1. STM32H730xB features and peripheral counts (continued)

Peripherals		no SMPS				SMPS		
		STM32H730VBT6	STM32H730VBH6	STM32H730ZBT6	STM32H730ZBI6	STM32H730ABI6Q	STM32H730IBK6Q	STM32H730IBT6Q
12-bit ADCs	Number of ADCs	1						
	Number of Direct channels	2	2	2	2	2	2	2
	Number of Fast channels	2	6	6	6	6	6	6
	Number of Slow channels	0	9	4	9	9	9	4
12-bit DAC	Present in IC	yes						
	Number of channels	2						
Comparators		2						
Operational amplifiers		2						
DFSDM	Present in IC	yes						
Maximum CPU frequency		550 MHz						
USB separate supply pad		-	yes	yes	yes	yes	yes	yes
USB internal regulator		-	-	-	-	yes	yes	yes
LDO		yes						
SMPS step-down converter		no				yes		
Operating voltage		1.71 to 3.6 V	1.62 to 3.6 V					
Operating temperature		-40°C to +85°C						
Package		LQFP 100	TFBGA 100	LQFP 144	UFBGA 144	UFBGA 169	UFBGA 176+25	LQFP176

1. The 24-bit SDRAM controller is a 32-bit controller with only a 24-bit data bus and without NBL2-3. It can be used for graphical purposes to access aligned 32-bit words ignoring upper 8 bits.
2. For limitations on peripheral features depending on packages, check the available pins/balls in *Table 7: STM32H730xB pin and ball descriptions*.

3 Functional overview

3.1 Arm® Cortex®-M7 with FPU

The Arm® Cortex®-M7 with double-precision FPU processor is the latest generation of Arm processors for embedded systems. It was developed to provide a low-cost platform that meets the needs of MCU implementation, with a reduced pin count and optimized power consumption, while delivering outstanding computational performance and low interrupt latency.

The Cortex®-M7 processor is a highly efficient high-performance featuring:

- Six-stage dual-issue pipeline
- Dynamic branch prediction
- Harvard architecture with L1 caches (32 Kbytes of I-cache and 32 Kbytes of D-cache)
- 64-bit AXI interface
- 64-bit ITCM interface
- 2x32-bit DTCM interfaces

The following memory interfaces are supported:

- Separate Instruction and Data buses (Harvard Architecture) to optimize CPU latency
- Tightly Coupled Memory (TCM) interface designed for fast and deterministic SRAM accesses
- AXI Bus interface to optimize Burst transfers
- Dedicated low-latency AHB-Lite peripheral bus (AHBP) to connect to peripherals.

The processor supports a set of DSP instructions, which allow efficient signal processing and complex algorithm execution.

It also supports single and double precision FPU (floating-point unit) speeds up software development by using metalanguage development tools, while avoiding saturation.

Figure 1 shows the general block diagram of the STM32H730xB family.

3.2 Memory protection unit (MPU)

The memory protection unit (MPU) manages the CPU access rights and the attributes of the system resources. It has to be programmed and enabled before use. Its main purposes are to prevent an untrusted user program to accidentally corrupt data used by the OS and/or by a privileged task, but also to protect data processes or read-protect memory regions.

The MPU defines access rules for privileged accesses and user program accesses. It allows defining up to 16 protected regions that can in turn be divided into up to eight independent subregions, where region address, size, and attributes can be configured. The protection area ranges from 32 bytes to 4 Gbytes of addressable memory.

When an unauthorized access is performed, a memory management exception is generated.

3.3 Memories

3.3.1 Embedded flash memory

The STM32H730xB devices embed 128 Kbytes of flash memory that can be used for storing programs and data.

The flash memory is organized as 266-bit flash words memory that can be used for storing both code and data constants. Each word consists of:

- one flash word (eight words, 32 bytes, or 256 bits)
- 10 ECC bits (single-error correction and double-error detection).

The flash memory is organized as follows:

- One sector of 128 Kbytes of user flash memory (4 K flash memory words)
- 128 Kbytes of system flash memory from which the device can boot
- 2 Kbytes (64 flash words) of user option bytes for user configuration

3.3.2 Embedded SRAM

All devices feature:

- from 128 to 320 Kbytes of AXI-SRAM mapped onto the AXI bus on D1 domain
- SRAM1 mapped on D2 domain: 16 Kbytes
- SRAM2 mapped on D2 domain: 16 Kbytes
- SRAM4 mapped on D3 domain: 16 Kbytes
- 4 Kbytes of backup SRAM

  The content of this area is protected against possible unwanted write accesses, and can be retained in Standby or V_{BAT} mode.
- RAM mapped to TCM interface (ITCM and DTCM):

  Both ITCM and DTCM RAMs are zero wait state memories. They can be accessed either from the CPU or the MDMA (even in Sleep mode) through a specific AHB slave of the Cortex®-M7CPU(AHBSAHBP):

  – 64 to 256 Kbytes of ITCM-RAM (instruction RAM)

    This RAM is connected to an ITCM 64-bit interface designed for execution of critical real-time routines by the CPU.

  – 128 Kbytes of DTCM-RAM (2x 64-Kbyte DTCM-RAMs on 2x32-bit DTCM ports)

    The DTCM-RAM could be used for critical real-time data, such as interrupt service routines or stack/heap memory. Both DTCM-RAMs can be used in parallel (for load/store operations) thanks to the Cortex®-M7 dual issue capability.

  The MDMA can be used to load code or data in ITCM or DTCM RAMs. As reflected above, 192 Kbyte of RAM can be used either for AXI SRAM or ITCM, with a 64Kbyte granularity.

Error code correction (ECC)

Over the product lifetime, and/or due to external events such as radiations, invalid bits in memories may occur. They can be detected and corrected by ECC. This is an expected behavior that has to be managed at final-application software level in order to ensure data integrity through ECC algorithms implementation.

SRAM data are protected by ECC:

- 7 ECC bits are added per 32-bit word.
- 8 ECC bits are added per 64-bit word for AXI-SRAM and ITCM-RAM.

The ECC mechanism is based on the SECDED algorithm. It supports single-error correction and double-error detection.

3.4 Secure access mode

In addition to other typical memory protection mechanism (RDP, PCROP), STM32H730xB devices introduce the Secure access mode, a new enhanced security feature. This mode allows developing user-defined secure services by ensuring, on the one hand code and data protection and on the other hand code safe execution.

Two types of secure services are available:

- STMicroelectronics Root Secure Services:

  These services are embedded in System memory. They provide a secure solution for firmware and third-party modules installation. These services rely on cryptographic algorithms based on a device unique private key.
- User-defined secure services:

  These services are embedded in user flash memory. Examples of user secure services are proprietary user firmware update solution, secure flash integrity check or any other sensitive applications that require a high level of protection.

  The secure firmware is embedded in specific user flash memory areas configured through option bytes.

Secure services are executed just after a reset and preempt all other applications to guarantee protected and safe execution. Once executed, the corresponding code and data are no more accessible.

The above secure services is activated for the next reset exits through an option bit.

3.5 Boot modes

At startup, the boot memory space is selected by the BOOT pin and BOOT_ADDx option bytes, allowing to program any boot memory address from 0x0000 0000 to 0x3FFF FFFF, which includes:

- All flash address space
- All RAM address space: ITCM, DTCM RAMs and SRAMs
- The system memory bootloader

The bootloader is located in nonuser system memory. It is used to reprogram the flash memory through a serial interface (USART, I2C, SPI, FDCAN, USB-DFU). Refer to application note AN2606 "*STM32 microcontroller system memory Boot mode"* for details.

3.6 CORDIC coprocessor (CORDIC)

The CORDIC coprocessor provides hardware acceleration of certain mathematical functions, notably trigonometric, commonly used in motor control, metering, signal processing and many other applications.

It speeds up the calculation of these functions compared to a software implementation, allowing a lower operating frequency, or freeing up processor cycles in order to perform other tasks.

The filter mathematical accelerator unit performs arithmetic operations on vectors. It comprises a multiplier/accumulator (MAC) unit, together with address generation logic, which allows it to index vector elements held in local memory.

The unit includes support for circular buffers on input and output, which allows digital filters to be implemented. Both finite and infinite impulse response filters can be realized.

The unit allows frequent or lengthy filtering operations to be offloaded from the CPU, freeing up the processor for other tasks. In many cases it can accelerate such calculations compared to a software implementation, resulting in a speed-up of time critical tasks.

CORDIC features

- 24-bit CORDIC rotation engine
- Circular and Hyperbolic modes
- Rotation and Vectoring modes
- Functions: Sine, Cosine, Sinh, Cosh, Atan, Atan2, Atanh, Modulus, Square root, Natural logarithm
- Programmable precision up to 20-bit
- Fast convergence: 4 bits per clock cycle
- Supports 16-bit and 32-bit fixed point input and output formats
- Low latency AHB slave interface
- Results can be read as soon as ready without polling or interrupt
- DMA read and write channels

3.7 Filter mathematical accelerator (FMAC)

The filter mathematical accelerator unit performs arithmetic operations on vectors. It comprises a multiplier/accumulator (MAC) unit, together with address generation logic, which allows it to index vector elements held in local memory.

The unit includes support for circular buffers on input and output, which allows digital filters to be implemented. Both finite and infinite impulse response filters can be realized.

The unit allows frequent or lengthy filtering operations to be offloaded from the CPU, freeing up the processor for other tasks. In many cases it can accelerate such calculations compared to a software implementation, resulting in a speed-up of time critical tasks.

FMAC features

- 16 x 16-bit multiplier
- 24+2-bit accumulator with addition and subtraction
- 16-bit input and output data
- 256 x 16-bit local memory
- Up to three areas can be defined in memory for data buffers (two inputs, one output), defined by programmable base address pointers and associated size registers
- Input and output sample buffers can be circular
- Buffer “watermark” feature reduces overhead in interrupt mode
- Filter functions: FIR, IIR (direct form 1)
- AHB slave interface
- DMA read and write data channels

3.8 Power supply management

3.8.1 Power supply scheme

STM32H730xB power supply voltages are the following:

- V_{DD} = 1.62 to 3.6 V: external power supply for I/Os, provided externally through V_{DD} pins.
- V_{DDLDO} = 1.62 to 3.6 V: supply voltage for the internal regulator supplying V_{CORE}
- V_{DDA} = 1.62 to 3.6 V: external analog power supplies for ADC, DAC, COMP and OPAMP.
- $V_{DD33USB}$: allows the support of a VDD supply different from 3.3 V while powering the USB transceiver with 3.3V on $V_{DD33USB}$.
- $V_{DD50USB}$ can be supplied through the USB cable to generate the $V_{DD33USB}$ via the USB internal regulator. This allows support of a V_{DD} supply different to 3.3 V.

  The USB regulator can be bypassed to supply directly $V_{DD33USB}$ with $V_{DD33USB}$ ≈ 3.3 V (see *Section 6: Electrical characteristics*).
- V_{BAT} = 1.2 to 3.6 V: power supply for the V_{SW} domain when V_{DD} is not present.
- V_{CAP}: V_{CORE} supply voltage, which values depend on voltage scaling (1.0 V, 1.1 V, 1.2 V or 1.35 V). They are configured through VOS bits in PWR_D3CR register. The

V_{CORE} domain is split into the following power domains that can be independently switch off.

- D1 domain containing some peripherals and the Cortex®-M7 core
- D2 domain containing a large part of the peripherals
- D3 domain containing some peripherals and the system control

- VDDSMPS= 1.62 V to 3.6 V: SMPS step-down converter power supply VDDSMPS must be kept at the same voltage level as VDD
- VLXSMPS = SMPS step-down converter output coupled to an inductor
- VFBSMPS = VCORE or 1.8 V or 2.5 V external SMPS step-down converter feedback voltage sense input.

During power-up and power-down phases, the following power sequence requirements must be respected (see *Figure 2*):

- When V_{DD} is below V_{DDmin}, other power supplies (V_{DDA}, $V_{DD33USB}$, $V_{DD50USB}$) must remain below V_{DD} + 300 mV.
- When V_{DD} is above V_{DDmin}, all power supplies are independent.

During the power-down phase, V_{DD} can temporarily become lower than other supplies only if the energy provided to the microcontroller remains below 1 mJ. This allows external decoupling capacitors to be discharged with different time constants during the power-down transient phase.

Figure 2. Power-up/power-down sequence

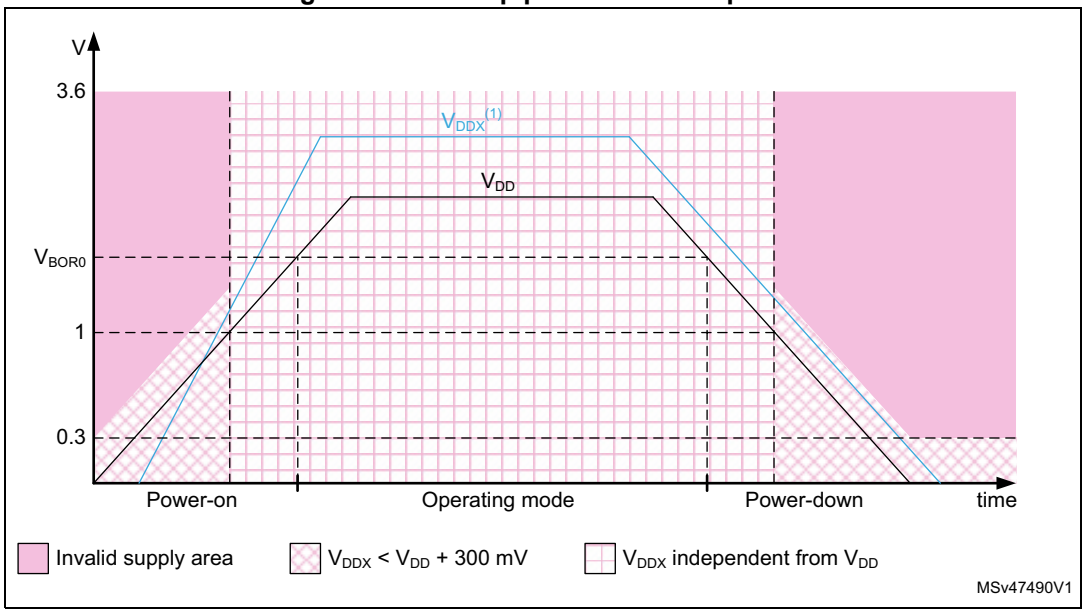

1. V_{DDx} refers to any power supply among V_{DDA}, $V_{DD33USB}$, $V_{DD50USB}$.

3.8.2 Power supply supervisor

The devices have an integrated power-on reset (POR)/ power-down reset (PDR) circuitry coupled with a brownout reset (BOR) circuitry:

- Power-on reset (POR)

  The POR supervisor monitors V_{DD} power supply and compares it to a fixed threshold. The devices remain in reset mode when V_{DD} is below this threshold,

- Power-down reset (PDR)

  The PDR supervisor monitors V_{DD} power supply. A reset is generated when V_{DD} drops below a fixed threshold.

  The PDR supervisor can be enabled/disabled through PDR_ON pin.

- Brownout reset (BOR)

  The BOR supervisor monitors V_{DD} power supply. Three BOR thresholds (from 2.1 to 2.7 V) can be configured through option bytes. A reset is generated when V_{DD} drops below this threshold.

3.8.3 Voltage regulator

The same voltage regulator supplies the three power domains (D1, D2, and D3). D1 and D2 can be independently switched off.

Voltage regulator output can be adjusted according to application needs through six power supply levels:

- Run mode (VOS0 to VOS3)
  - Scale 0: boosted performance
  - Scale 1: high performance
  - Scale 2: medium performance and consumption
  - Scale 3: optimized performance and low-power consumption
- Stop mode (SVOS3 to SVOS5)
  - Scale 3: peripheral with wake-up from Stop mode capabilities (UART, SPI, I2C, LPTIM) are operational
  - Scale 4 and 5 where the peripheral with wake-up from Stop mode is disabled. The peripheral functionality is disabled but wake-up from Stop mode is possible through GPIO or asynchronous interrupt.

3.9 Low-power strategy

There are several ways to reduce power consumption on STM32H730xB:

- Decrease the dynamic power consumption by slowing down the system clocks even in Run mode and by individually clock gating the peripherals that are not used.
- Save power when the CPU is idle, by selecting among the available low-power modes according to the user application needs. This allows the best compromise between short startup time and low power consumption to be achieved, according to the available wake-up sources.

The devices feature several low-power modes:

- CSleep (CPU clock stopped)
- CStop (CPU subsystem clock stopped)
- DStop (Domain bus matrix clock stopped)
- Stop (system clock stopped)
- DStandby (Domain powered down)
- Standby (system powered down)

CSleep and CStop low-power modes are entered by the MCU when executing the WFI (Wait for Interrupt) or WFE (Wait for Event) instructions, or when the SLEEPONEXIT bit of the Cortex®-Mx core is set after returning from an interrupt service routine.

A domain can enter low-power mode (DStop or DStandby) when the processor, its subsystem, and the peripherals allocated in the domain enter low-power mode.

If part of the domain is not in low-power mode, the domain remains in the current mode.

Finally, the system can enter Stop or Standby when all EXTI wake-up sources are cleared and the power domains are in DStop or DStandby mode.

Table 2. System versus domain low-power mode

System power mode	D1 domain power mode	D2 domain power mode	D3 domain power mode
Run	DRun/DStop/DStandby	DRun/DStop/DStandby	DRun
Stop	DStop/DStandby	DStop/DStandby	DStop
Standby	DStandby	DStandby	DStandby

3.10 Reset and clock controller (RCC)

The clock and reset controller is located in D3 domain. The RCC manages the generation of all the clocks, as well as the clock gating and the control of the system and peripheral resets. It provides a high flexibility in the choice of clock sources and allows clock ratios to be applied to improve the power consumption. In addition, on some communication peripherals that are capable to work with two different clock domains (either a bus interface clock or a kernel peripheral clock), thus the system frequency can be changed without modifying the baud rate.

3.10.1 Clock management

The devices embed four internal oscillators, two oscillators with external crystal or resonator, two internal oscillators with fast startup time and three PLLs.

The RCC receives the following clock source inputs:

- Internal oscillators:
  - 64 MHz HSI clock
  - 48 MHz RC oscillator
  - 4 MHz CSI clock
  - 32 kHz LSI clock
- External oscillators:
  - HSE clock: 4-50 MHz (generated from an external source) or 4-48 MHz(generated from a crystal/ceramic resonator)
  - LSE clock: 32.768 kHz

The RCC provides three PLLs: one for system clock, two for kernel clocks.

The system starts on the HSI clock. The user application can then select the clock configuration.

3.10.2 System reset sources

Power-on reset initializes all registers while system reset reinitializes the system except for the debug, part of the RCC and power controller status registers, as well as the backup power domain.

A system reset is generated in the following cases:

- Power-on reset (pwr_por_rst)
- Brownout reset
- Low level on NRST pin (external reset)
- Window watchdog
- Independent watchdog
- Software reset
- Low-power mode security reset
- Exit from Standby

3.11 General-purpose input/outputs (GPIOs)

Each of the GPIO pins can be configured by software as output (push-pull or open-drain, with or without pull-up or pull-down), as input (floating, with or without pull-up or pull-down) or as peripheral alternate function. Most of the GPIO pins are shared with digital or analog alternate functions. All GPIOs are high-current-capable and have speed selection to better manage internal noise, power consumption and electromagnetic emission.

After reset, all GPIOs (except debug pins) are in Analog mode to reduce power consumption (refer to GPIOs register reset values in the device reference manual).

The I/O configuration can be locked if needed by following a specific sequence in order to avoid spurious writing to the I/Os registers.

3.12 Bus-interconnect matrix

The devices feature an AXI bus matrix, two AHB bus matrices and bus bridges that allow the interconnection of bus masters with bus slaves (see *Figure 3*).

Figure 3. STM32H730xB bus matrix

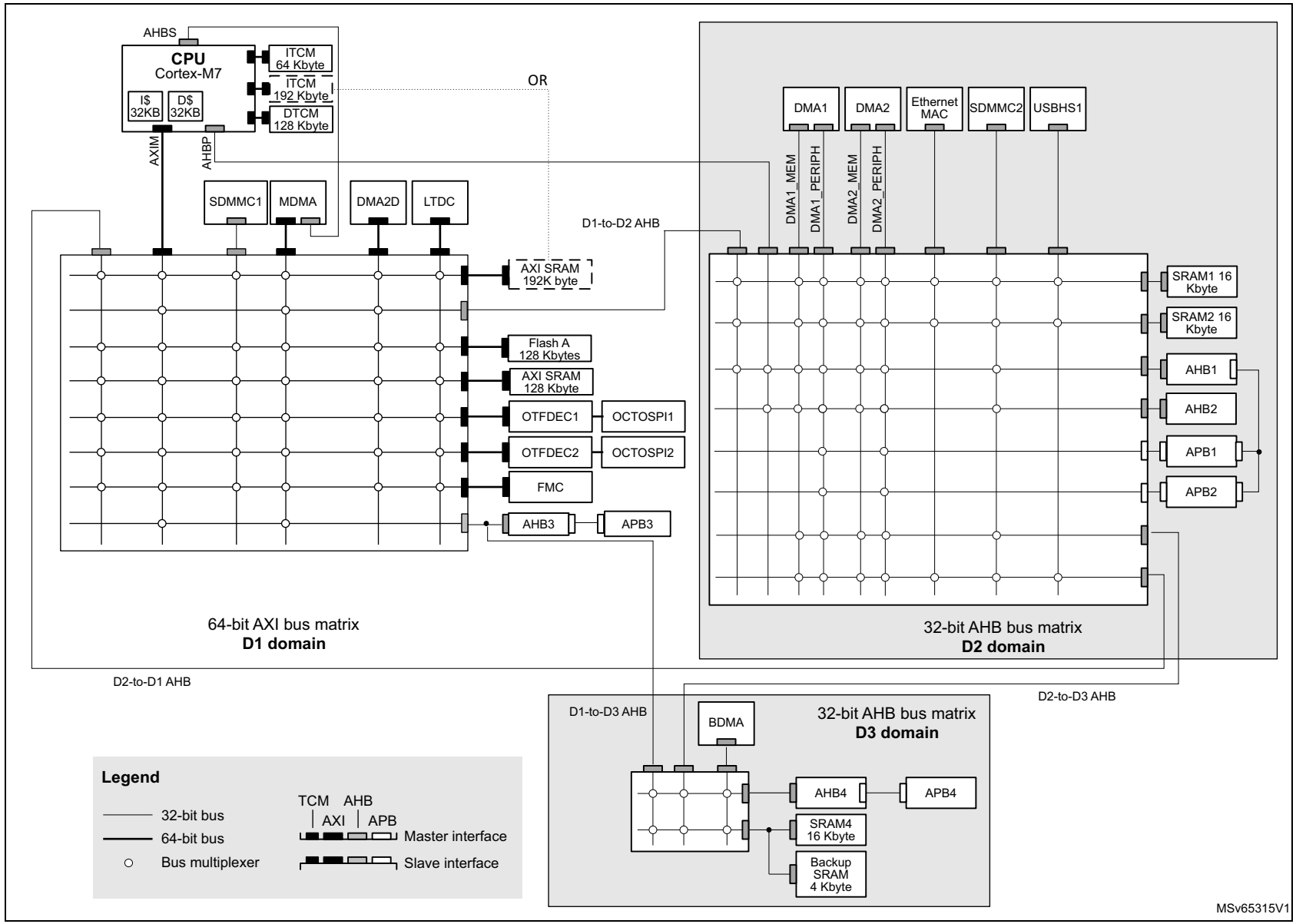

3.13 DMA controllers

The devices feature four DMA instances and a DMA request router to unload CPU activity:

- A master direct memory access (MDMA)

  The MDMA is a high-speed DMA controller, which is in charge of all types of memory transfers (peripheral to memory, memory to memory, memory to peripheral), without any CPU action. It features a master AXI interface and a dedicated AHB interface to access Cortex®-M7 TCM memories.

  The MDMA is located in D1 domain. It is able to interface with the other DMA controllers located in D2 domain to extend the standard DMA capabilities, or can manage peripheral DMA requests directly.

  Each of the 16 channels can perform single block transfers, repeated block transfers and linked list transfers.
- Two dual-port DMAs (DMA1, DMA2) located in D2 domain, with FIFO and request router capabilities.
- One basic DMA (BDMA) located in D3 domain, with request router capabilities.
- A DMA request multiplexer (DMAMUX)

  The DMA request router could be considered as an extension of the DMA controller. It routes the DMA peripheral requests to the DMA controller itself. This allowing managing the DMA requests with a high flexibility, maximizing the number of DMA requests that run concurrently, as well as generating DMA requests from peripheral output trigger or DMA event.

3.14 Chrom-ART Accelerator (DMA2D)

The Chrom-ART Accelerator (DMA2D) is a specialized DMA dedicated to image manipulation. It can perform the following operations:

- Filling a part or the whole of a destination image with a specific color
- Copying a part or the whole of a source image into a part or the whole of a destination image
- Copying a part or the whole of a source image into a part or the whole of a destination image with a pixel format conversion
- Blending a part and/or two complete source images with different pixel format and copy the result into a part or the whole of a destination image with a different color format.
- All the classical color coding schemes are supported from 4-bit up to 32-bit per pixel with indexed or direct color mode, including block based YCbCr to handle JPEG decoder output.
- The DMA2D has its own dedicated memories for CLUTs (color look-up tables).

An interrupt can be generated when an operation is complete or at a programmed watermark.

All the operations are fully automated and are running independently from the CPU or the DMAs.

3.15 Nested vectored interrupt controller (NVIC)

The devices embed a nested vectored interrupt controller, which is able to manage 16 priority levels, and handle up to 140 maskable interrupt channels plus the 16 interrupt lines of the Cortex®-M7 with FPU core.

- Closely coupled NVIC gives low-latency interrupt processing
- Interrupt entry vector table address passed directly to the core
- Allows early processing of interrupts
- Processing of late arriving, higher-priority interrupts
- Support tail chaining
- Processor context automatically saved on interrupt entry, and restored on interrupt exit with no instruction overhead

This hardware block provides flexible interrupt management features with minimum interrupt latency.

3.16 Extended interrupt and event controller (EXTI)

The EXTI controller performs interrupt and event management. In addition, it can wake up the processor, power domains and/or D3 domain from Stop mode.

The EXTI handles up to 80 independent event/interrupt lines split as 26 configurable events and 54 direct events.

Configurable events have dedicated pending flags, active edge selection, and software trigger capable.

Direct events provide interrupts or events from peripherals having a status flag.

3.17 Cyclic redundancy check calculation unit (CRC)

The CRC (cyclic redundancy check) calculation unit is used to get a CRC code using a programmable polynomial.

Among other applications, CRC-based techniques are used to verify data transmission or storage integrity. In the scope of the EN/IEC 60335-1 standard, they offer a means of verifying the flash memory integrity. The CRC calculation unit helps compute a signature of the software during runtime, to be compared with a reference signature generated at link-time and stored at a given memory location.

3.18 Flexible memory controller (FMC)

The FMC controller main features are the following:

- Interface with static-memory mapped devices including:
  - Static random access memory (SRAM)
  - NOR flash memory/OneNAND flash memory
  - PSRAM (four memory banks)
  - NAND flash memory with ECC hardware to check up to 8 Kbytes of data
- Interface with synchronous DRAM (SDRAM/Mobile LPSDR SDRAM) memories
- 8-,16-, 24-bit data bus width
- Independent Chip Select control for each memory bank
- Independent configuration for each memory bank
- Write FIFO
- Read FIFO for SDRAM controller
- The maximum FMC_CLK/FMC_SDCLK frequency for synchronous accesses is the FMC kernel clock divided by 2.

3.19 Octo-SPI memory interface (OCTOSPI)

The OCTOSPI is a specialized communication interface targeting single, dual, quad, or octal SPI memories. The STM32H730xB embeds two separate Octo-SPI interfaces.

Each OCTOSPI instance supports single/dual/quad/octal SPI formats. multiplexing of single/dual/quad/octal SPI over the same bus can be achieved using the integrated Octo-SPI I/O manager (OCTOSPIM).

The OCTOSPI can operate in any of the three following modes:

- Indirect mode: all the operations are performed using the OCTOSPI registers
- Status-polling mode: the external memory status register is periodically read and an interrupt can be generated in case of flag setting
- Memory-mapped mode: the external memory is memory mapped and it is seen by the system as if it was an internal memory supporting both read and write operations.

The OCTOSPI supports two frame formats supported by most external serial memories such as serial PSRAMs, serial NAND and serial NOR flash memories, Hyper RAMs and Hyper flash memories.

Multichip package (MCP) combining any of the above mentioned memory types can also be supported.

- The classical frame format with the command, address, alternate byte, dummy cycles, and data phase
- The HyperBus™ frame format.

3.20 Analog-to-digital converters (ADCs)

STM32H730xB devices embed three analog-to-digital converters, two of 16-bit resolution, and the third of 12-bit resolution. The 16-bit resolution ADCs can be configured as 16, 14, 12, 10 or 8 bits. The 12-bit resolution ADC can be configured to 12, 10 or 8 bits.

Each ADC shares up to 20 external channels, performing conversions in Single-shot or Scan mode. In Scan mode, automatic conversion is performed on a selected group of analog inputs.

Additional logic functions embedded in the ADC interface allow:

- simultaneous sample and hold
- Interleaved sample and hold

The ADC can be served by the DMA controller, thus allowing automatic transfer of ADC converted values to a destination location without any software action.

In addition, an analog watchdog feature can accurately monitor the converted voltage of one, some, or all selected channels. An interrupt is generated when the converted voltage is outside the programmed thresholds.

To synchronize A/D conversion and timers, the ADCs can be triggered by any of the TIM1, TIM2, TIM3, TIM4, TIM6, TIM8, TIM15, TIM23, TIM24, and LPTIM1 timers.

3.21 Temperature sensor

STM32H730xB devices embed a temperature sensor that generates a voltage (V_{TS}) that varies linearly with the temperature. This temperature sensor is internally connected to ADC3_IN17. The conversion range is between 1.7 V and 3.6 V. It can measure the device junction temperature ranging from − 40 to +125°C.

The temperature sensor have a good linearity, but it has to be calibrated to obtain a good overall accuracy of the temperature measurement. As the temperature sensor offset varies from chip to chip due to process variation, the uncalibrated internal temperature sensor is suitable for applications that detect temperature changes only. To improve the accuracy of the temperature sensor measurement, each device is individually factory-calibrated by ST. The temperature sensor factory calibration data are stored by ST in the system memory area, which is accessible in read-only mode.

3.22 Digital temperature sensor (DTS)

STM32H730xB devices embed a sensor that converts the temperature into a square wave the frequency of which is proportional to the temperature. The PCLK or the LSE clock can be used as the reference clock for the measurements. A formula given in the product reference manual allows calculation of the temperature according to the measured frequency stored in the DTS_DR register.

3.23 V_{BAT} operation

The V_{BAT} power domain contains the RTC, the backup registers, and the backup SRAM.

To optimize battery duration, this power domain is supplied by V_{DD} when available or by the voltage applied on VBAT pin (when V_{DD} supply is not present). V_{BAT} power is switched when the PDR detects that V_{DD} dropped below the PDR level.

The voltage on the VBAT pin could be provided by an external battery, a supercapacitor or directly by V_{DD}, in which case, the V_{BAT} mode is not functional.

V_{BAT} operation is activated when V_{DD} is not present.

The V_{BAT} pin supplies the RTC, the backup registers, and the backup SRAM.

Note: When the microcontroller is supplied from V_{BAT}, external interrupts and RTC alarm/events do not exit it from V_{BAT} operation.

When PDR_ON pin is connected to V_{SS} (Internal Reset OFF), the V_{BAT} functionality is no more available and V_{BAT} pin should be connected to V_{DD}.

3.24 Digital-to-analog converters (DAC)

The two 12-bit buffered DAC channels can be used to convert two digital signals into two analog voltage signal outputs.

This dual digital interface supports the following features:

- two DAC converters: one for each output channel
- 8-bit or 12-bit monotonic output
- left or right data alignment in 12-bit mode
- synchronized update capability
- noise-wave generation
- triangular-wave generation
- dual DAC channel independent or simultaneous conversions
- DMA capability for each channel including DMA underrun error detection
- external triggers for conversion
- input voltage reference V_{REF+} or internal VREFBUF reference.

The DAC channels are triggered through the timer update outputs that are also connected to different DMA streams.

3.25 Ultra-low-power comparators (COMP)

STM32H730xB devices embed two rail-to-rail comparators (COMP1 and COMP2). They feature programmable reference voltage (internal or external), hysteresis, and speed (low speed for low-power) as well as selectable output polarity.

The reference voltage can be one of the following:

- An external I/O
- A DAC output channel
- An internal reference voltage or submultiple (1/4, 1/2, 3/4).

All comparators can wake up from Stop mode, generate interrupts and breaks for the timers, and be combined into a window comparator.

3.26 Operational amplifiers (OPAMP)

STM32H730xB devices embed two rail-to-rail operational amplifiers (OPAMP1 and OPAMP2) with external or internal follower routing and PGA capability.

The operational amplifier main features are:

- PGA with a noninverting gain ranging of 2, 4, 8 or 16 or inverting gain ranging of -1, -3, -7 or -15
- One positive input connected to DAC
- Output connected to internal ADC
- Low input bias current down to 1 nA
- Low input offset voltage down to 1.5 mV
- Gain bandwidth up to 7.3 MHz

The devices embed two operational amplifiers (OPAMP1 and OPAMP2) with two inputs and one output each. These three I/Os can be connected to the external pins, thus enabling any type of external interconnections. The operational amplifiers can be configured internally as a follower, as an amplifier with a noninverting gain ranging from 2 to 16 or with inverting gain ranging from -1 to -15.

3.27 Digital filter for sigma-delta modulators (DFSDM)

The devices embed one DFSDM with four digital filters modules and eight external input serial channels (transceivers) or alternately eight internal parallel inputs support.

The DFSDM peripheral is dedicated to interface the external ΣΔ modulators to microcontroller and then to perform digital filtering of the received data streams (which represent analog value on ΣΔ modulators inputs). DFSDM can also interface PDM (Pulse Density Modulation) microphones and perform PDM to PCM conversion and filtering in hardware. DFSDM features optional parallel data stream inputs from internal ADC peripherals or microcontroller memory (through DMA/CPU transfers into DFSDM).

DFSDM transceivers support several serial interface formats (to support various ΣΔ modulators). DFSDM digital filter modules perform digital processing according to user-selected filter parameters with up to 24-bit final ADC resolution.

The DFSDM peripheral supports:

- 8 multiplexed input digital serial channels:
  - configurable SPI interface to connect various SD modulators
  - configurable Manchester coded 1 wire interface support
  - PDM (Pulse Density Modulation) microphone input support
  - maximum input clock frequency up to 20 MHz (10 MHz for Manchester coding)
  - clock output for SD modulators: 0..20 MHz
- alternative inputs from eight internal digital parallel channels (up to 16-bit input resolution):
  - internal sources: ADC data or memory data streams (DMA)
- 4 digital filter modules with adjustable digital signal processing:
  - $Sinc^x$ filter: filter order/type (1..5), oversampling ratio (up to 1..1024)
  - integrator: oversampling ratio (1..256)
- up to 24-bit output data resolution, signed output data format
- automatic data offset correction (offset stored in register by user)
- continuous or single conversion
- start-of-conversion triggered by:
  - software trigger
  - internal timers
  - external events
  - start-of-conversion synchronously with first digital filter module (DFSDM0)
- analog watchdog feature:
  - low value and high value data threshold registers
  - dedicated configurable Sincx digital filter (order = 1..3, oversampling ratio = 1..32)
  - input from final output data or from selected input digital serial channels
  - continuous monitoring independently from standard conversion
- short circuit detector to detect saturated analog input values (bottom and top range):
  - up to 8-bit counter to detect 1..256 consecutive 0's or 1's on serial data stream
  - monitoring continuously each input serial channel
- break signal generation on analog watchdog event or on short circuit detector event

- extremes detector:
  - storage of minimum and maximum values of final conversion data
  - refreshed by software
- DMA capability to read the final conversion data
- interrupts: end of conversion, overrun, analog watchdog, short circuit, input serial channel clock absence
- “regular” or “injected” conversions:
  - “regular” conversions can be requested at any time or even in Continuous mode without having any impact on the timing of “injected” conversions
  - “injected” conversions for precise timing and with high conversion priority
- Pulse skipper feature to support beamforming applications (delay-line like behavior).

Table 3. DFSDM implementation

DFSDM features	DFSDM1
Number of filters	4
Number of input transceivers/channels	8
Internal ADC parallel input	X
Number of external triggers	16
Regular channel information in identification register	X

3.28 Digital camera interface (DCMI)

The devices embed a camera interface that can connect with camera modules and CMOS sensors through an 8-bit to 14-bit parallel interface, to receive video data. The camera interface can achieve a data transfer rate up to 140 Mbyte/s using an 80 MHz pixel clock. It features:

- Programmable polarity for the input pixel clock and synchronization signals
- Parallel data communication can be 8-, 10-, 12-, or 14-bit
- Supports 8-bit progressive video monochrome or raw bayer format, YCbCr 4:2:2 progressive video, RGB 565 progressive video or compressed data (like JPEG)
- Supports Continuous mode or Snapshot (a single frame) mode
- Capability to automatically crop the image

3.29 PSSI

The PSSI is a generic synchronous 8-/16-bit parallel data input/output slave interface. It allows the transmitter to send a data valid signal to indicate when the data is valid, and the receiver to output a flow control signal to indicate when it is ready to sample the data.

The main PSSI features are:

- Slave mode operation
- 8- or 16-bit parallel data input or output
- 8-word (32-byte) FIFO
- Data enable (DE) alternate function input and Ready (RDY) alternate function output.

When enabled, these signals can either allow the transmitter to indicate when the data is valid or the receiver to indicate when it is ready to sample the data, or both.

The PSSI shares most of its circuitry with the digital camera interface (DCMI). It therefore cannot be used simultaneously with the DCMI.

3.30 LCD-TFT controller

The LCD-TFT display controller provides a 24-bit parallel digital RGB (Red, Green, Blue) and delivers all signals to interface directly to a broad range of LCD and TFT panels up to XGA (1024 x 768) resolution with the following features:

- 2 display layers with dedicated FIFO (64x64-bit)
- Color look-up table (CLUT) up to 256 colors (256x24-bit) per layer
- Up to eight input color formats selectable per layer
- Flexible blending between two layers using alpha value (per pixel or constant)
- Flexible programmable parameters for each layer
- Color keying (transparency color)
- Up to four programmable interrupt events
- AXI master interface with burst of 16 words

3.31 True random number generator (RNG)

The RNG is a true random number generator that provides full entropy outputs to the application as 32-bit samples. It is composed of a live entropy source (analog) and an internal conditioning component.

The RNG can be used to construct a nondeterministic random bit generator (NDRBG), as a NIST SP 800-90B compliant entropy source.

The RNG true random number generator has been tested using German BSI statistical tests of AIS-31 (T0 to T8), and NIST SP800-90B statistical test suite.

3.32 Cryptographic acceleration (CRYP and HASH)

The devices embed a cryptographic processor that supports the advanced cryptographic algorithms usually required to ensure confidentiality, authentication, data integrity and non-repudiation when exchanging messages

with a peer:

- Encryption/Decryption
  - DES/TDES (data encryption standard/triple data encryption standard): ECB (electronic codebook) and CBC (cipher block chaining) chaining algorithms, 64-, 128- or 192-bit key
  - AES (advanced encryption standard): ECB, CBC, GCM, CCM, and CTR (counter mode) chaining algorithms, 128, 192 or 256-bit key
- Universal HASH
  - – SHA-1 and SHA-2 (secure HASH algorithms)
  - – MD5
  - – HMAC

The cryptographic accelerator supports DMA request generation.

3.33 On-the-fly decryption engine (OTFDEC)

The embedded OTFDEC decrypts in real-time the encrypted content stored in the external Octo-SPI memories used in Memory-mapped mode.

The OTFDEC uses the AES-128 algorithm in counter mode (CTR).

Code execution on external Octo-SPI memories can be protected against fault injection thanks to

STMicroelectronics enhanced encryption mode (refer to RM0468 for details).

The OTFDEC main features are as follow:

- On-the-fly 128-bit decryption during STM32 Octo-SPI read operations (single or multiple).
  - AES-CTR algorithm with keystream FIFO (depth= 4)
  - Support for any read size
- Up to four independent encrypted regions
  - Region definition granularity: 4096 bytes
  - Region configuration write locking mechanism
  - Two optional decryption modes: execute-only and execute-never
- 128-bit key for each region, two-byte firmware version, and eight-byte application-defined nonce
- Encryption keys confidentiality and integrity protection
  - Write only registers with software locking mechanism
  - Availability of 8-bit CRC as public key information
- Support for STM32 Octo-SPI prefetching mechanism.

3.34 Timers and watchdogs

The devices include two advanced-control timers, twelve general-purpose timers, two basic timers, five low-power timers, two watchdogs and a SysTick timer.

All timer counters can be frozen in Debug mode.

Table 4 compares the features of the advanced-control, general-purpose and basic timers.

Table 4. Timer feature comparison

Timer type	Timer	Counter resolution	Counter type	Prescaler factor	DMA request generation	Capture/ compare channels	Comple-mentary output	Max interface clock (MHz)	Max timer clock (MHz) (1)
Advanced -control	TIM1, TIM8	16-bit	Up, Down, Up/down	Any integer between 1 and 65536	Yes	4	Yes	137.5	275
General purpose	TIM2, TIM5, TIM23, TIM24	32-bit	Up, Down, Up/down	Any integer between 1 and 65536	Yes	4	No	137.5	275
	TIM3, TIM4	16-bit	Up, Down, Up/down	Any integer between 1 and 65536	Yes	4	No	137.5	275
	TIM12	16-bit	Up	Any integer between 1 and 65536	No	2	No	137.5	275
	TIM13, TIM14	16-bit	Up	Any integer between 1 and 65536	No	1	No	137.5	275
	TIM15	16-bit	Up	Any integer between 1 and 65536	Yes	2	1	137.5	275
	TIM16, TIM17	16-bit	Up	Any integer between 1 and 65536	Yes	1	1	137.5	275

Table 4. Timer feature comparison (continued)

Timer type	Timer	Counter resolution	Counter type	Prescaler factor	DMA request generation	Capture/ compare channels	Comple-mentary output	Max interface clock (MHz)	Max timer clock (MHz) (1)
Basic	TIM6, TIM7	16-bit	Up	Any integer between 1 and 65536	Yes	0	No	137.5	275
Low-power timer	LPTIM1, LPTIM2, LPTIM3, LPTIM4, LPTIM5	16-bit	Up	1, 2, 4, 8, 16, 32, 64, 128	No	0	No	137.5	275

1. The maximum timer clock is up to 550 MHz depending on theTIMPRE bit in the RCC_CFGR register and D2PRE1/2 bits in RCC_D2CFGR register.

3.34.1 Advanced-control timers (TIM1, TIM8)

The advanced-control timers (TIM1, TIM8) can be seen as three-phase PWM generators multiplexed on six channels. They have complementary PWM outputs with programmable inserted dead times. They can also be considered as complete general-purpose timers. Their four independent channels can be used for:

- Input capture
- Output compare
- PWM generation (Edge- or center-aligned modes)
- One-pulse mode output

If configured as standard 16-bit timers, they have the same features as the general-purpose TIMx timers. If configured as 16-bit PWM generators, they have full modulation capability (0-100%).

The advanced-control timer can work together with the TIMx timers via the Timer Link feature for synchronization or event chaining.

TIM1 and TIM8 support independent DMA request generation.

3.34.2 General-purpose timers (TIMx)

There are 10 synchronizable general-purpose timers embedded in the STM32H730xB devices (see *Table 4: Timer feature comparison* for differences).

- **TIM2, TIM3, TIM4, TIM5, TIM23, TIM24**

  The devices include four full-featured general-purpose timers: TIM2, TIM3, TIM4, TIM5, TIM23 and TIM24. TIM2, TIM5, TIM23 and TIM24 are based on a 32-bit autoreload up/downcounter and a 16-bit prescaler while TIM3 and TIM4 are based on a 16-bit autoreload up/downcounter and a 16-bit prescaler. All timers feature 4 independent channels for input capture/output compare, PWM or One-pulse mode output. This gives up to 24 input capture/output compare/PWMs on the largest packages.

  TIM2, TIM3, TIM4, TIM5, TIM23 and TIM24 general-purpose timers can work together, or with the other general-purpose timers and the advanced-control timers TIM1 and TIM8 via the Timer Link feature for synchronization or event chaining.

  Any of these general-purpose timers can be used to generate PWM outputs.

  TIM2, TIM3, TIM4, TIM5, TIM23, and TIM24 all have independent DMA request generation. They are capable of handling quadrature (incremental) encoder signals and the digital outputs from one to four hall-effect sensors.

- **TIM12, TIM13, TIM14, TIM15, TIM16, TIM17**

  These timers are based on a 16-bit autoreload upcounter and a 16-bit prescaler. TIM13, TIM14, TIM16 and TIM17 feature one independent channel, whereas TIM12 and TIM15 have two independent channels for input capture/output compare, PWM or One-pulse mode output. They can be synchronized with the TIM2, TIM3, TIM4, TIM5, TIM23, and TIM24 full-featured general-purpose timers or used as simple time bases.

3.34.3 Basic timers TIM6 and TIM7

These timers are mainly used for DAC trigger and waveform generation. They can also be used as a generic 16-bit time base.

TIM6 and TIM7 support independent DMA request generation.

3.34.4 Low-power timers (LPTIM1, LPTIM2, LPTIM3, LPTIM4, LPTIM5)

The low-power timers have an independent clock and is running also in Stop mode if it is clocked by LSE, LSI or an external clock. It is able to wake up the devices from Stop mode.

This low-power timer supports the following features:

- 16-bit up counter with 16-bit autoreload register
- 16-bit compare register
- Configurable output: pulse, PWM
- Continuous / One-shot mode
- Selectable software / hardware input trigger
- Selectable clock source:
- Internal clock source: LSE, LSI, HSI or APB clock
- External clock source over LPTIM input (working even with no internal clock source running, used by the Pulse Counter Application)
- Programmable digital glitch filter
- Encoder mode

3.34.5 Independent watchdog

The independent watchdog is based on a 12-bit downcounter and 8-bit prescaler. It is clocked from an independent 32 kHz internal RC and as it operates independently from the main clock, it can operate in Stop and Standby modes. It can be used either as a watchdog to reset the device when a problem occurs, or as a free-running timer for application timeout management. It is hardware- or software-configurable through the option bytes.

A window option allows the device to be reset when a reload operation is made too early after the previous reload.

3.34.6 Window watchdog

The window watchdog is based on a 7-bit downcounter that can be set as free-running. It can be used as a watchdog to reset the device when a problem occurs. It is clocked from the main clock. It has an early warning interrupt capability and the counter can be frozen in Debug mode.

3.34.7 SysTick timer

This timer is dedicated to real-time operating systems, but could also be used as a standard down counter. It features:

- A 24-bit down counter
- Autoreload capability
- Maskable system interrupt generation when the counter reaches 0
- Programmable clock source.

3.35 Real-time clock (RTC), backup SRAM and backup registers

The RTC is an independent BCD timer/counter. It supports the following features:

- Calendar with subsecond, seconds, minutes, hours (12 or 24 format), week day, date, month, year, in BCD (binary-coded decimal) format.
- Automatic correction for 28, 29 (leap year), 30, and 31 days of the month.
- Two programmable alarms.
- On-the-fly correction from 1 to 32767 RTC clock pulses. This can be used to synchronize it with a master clock.
- Reference clock detection: a more precise second source clock (50 or 60 Hz) can be used to enhance the calendar precision.
- Digital calibration circuit with 0.95 ppm resolution, to compensate for quartz crystal inaccuracy.
- Three anti-tamper detection pins with programmable filter.
- Timestamp feature which can be used to save the calendar content. This function can be triggered by an event on the timestamp pin, or by a tamper event, or by a switch to V_{BAT} mode.
- 17-bit autoreload wake-up timer (WUT) for periodic events with programmable resolution and period.

The RTC and the 32 backup registers are supplied through a switch that takes power either from the V_{DD} supply when present or from the V_{BAT} pin.

The backup registers are 32-bit registers used to store 128 bytes of user application data when V_{DD} power is not present. They are not reset by a system or power reset, or when the device wakes up from Standby mode.

The RTC clock sources can be:

- A 32.768 kHz external crystal (LSE)
- An external resonator or oscillator (LSE)
- The internal low-power RC oscillator (LSI, with typical frequency of 32 kHz)
- The high-speed external clock (HSE) divided by 32.

The RTC is functional in V_{BAT} mode and in all low-power modes when it is clocked by the LSE. When clocked by the LSI, the RTC is not functional in V_{BAT} mode, but is functional in all low-power modes.

All RTC events (Alarm, wake-up timer, timestamp or tamper) can generate an interrupt and wake up the device from the low-power modes.

3.36 Inter-integrated circuit interface (I2C)

STM32H730xB devices embed five I^2C interfaces.

The I^2C bus interface handles communications between the microcontroller and the serial I^2C bus. It controls all I^2C bus-specific sequencing, protocol, arbitration and timing.

The I2C peripheral supports:

- I^2C-bus specification and user manual rev. 5 compatibility:
  - Slave and master modes, multimaster capability
  - Standard-mode (Sm), with a bitrate up to 100 kbit/s
  - Fast-mode (Fm), with a bitrate up to 400 kbit/s
  - Fast-mode Plus (Fm+), with a bitrate up to 1 Mbit/s and 20 mA output drive I/Os
  - 7-bit and 10-bit addressing mode, multiple 7-bit slave addresses
  - Programmable setup and hold times
  - Optional clock stretching
- System Management Bus (SMBus) specification rev 2.0 compatibility:
  - Hardware PEC (Packet Error Checking) generation and verification with ACK control
  - Address resolution protocol (ARP) support
  - SMBus alert
- Power system management protocol (PMBus™) specification rev 1.1 compatibility
- Independent clock: a choice of independent clock sources allowing the I2C communication speed to be independent from the PCLK reprogramming.
- Wake up from Stop mode on address match
- Programmable analog and digital noise filters
- 1-byte buffer with DMA capability

3.37 Universal synchronous/asynchronous receiver transmitter (USART)

STM32H730xB devices have five embedded universal synchronous receiver transmitters (USART1, USART2, USART3, USART6, and USART10) and five universal asynchronous receiver transmitters (UART4, UART5, UART7, UART8, and UART9). Refer to *Table 5: USART features* for a summary of USARTx and UARTx features.

These interfaces provide asynchronous communication, IrDA SIR ENDEC support, multiprocessor communication mode, single-wire half-duplex communication mode and have LIN master/slave capability. They provide hardware management of the CTS and RTS signals, and RS485 Driver Enable. They are able to communicate at speeds of up to 17 Mbit/s.

USART1, USART2, USART3, USART6, and USART10 also provide Smartcard mode (ISO 7816 compliant) and SPI-like communication capability.

The USARTs embed a Transmit FIFO (TXFIFO) and a Receive FIFO (RXFIFO). FIFO mode is enabled by software and is disabled by default.

All USART have a clock domain independent from the CPU clock, allowing the USARTx to wake up the MCU from Stop mode. The wake-up from Stop mode is programmable and can be done on:

- Start bit detection
- Any received data frame
- A specific programmed data frame
- Specific TXFIFO/RXFIFO status when FIFO mode is enabled.

All USART interfaces can be served by the DMA controller.

Table 5. USART features

USART modes/features(1)	USART1/2/3/6/10	UART4/5/7/8/9
Hardware flow control for modem	X	X
Continuous communication using DMA	X	X
Multiprocessor communication	X	X
Synchronous mode (master/slave)	X	-
Smartcard mode	X	-
Single-wire half-duplex communication	X	X
IrDA SIR ENDEC block	X	X
LIN mode	X	X
Dual clock domain and wake-up from low power mode	X	X
Receiver timeout interrupt	X	X
Modbus communication	X	X
Auto baud rate detection	X	X
Driver Enable	X	X
USART data length	7, 8 and 9 bits	
Tx/Rx FIFO	X	X
Tx/Rx FIFO size	16	

1. X = supported.

3.38 Low-power universal asynchronous receiver transmitter (LPUART)

The device embeds one Low-Power UART (LPUART1). The LPUART supports asynchronous serial communication with minimum power consumption. It supports half duplex single wire communication and modem operations (CTS/RTS). It allows multiprocessor communication.

The LPUARTs embed a Transmit FIFO (TXFIFO) and a Receive FIFO (RXFIFO). FIFO mode is enabled by software and is disabled by default.

The LPUART has a clock domain independent from the CPU clock, and can wake up the system from Stop mode. The wake-up from Stop mode are programmable and can be done on:

- Start bit detection
- Any received data frame
- A specific programmed data frame
- Specific TXFIFO/RXFIFO status when FIFO mode is enabled.

Only a 32.768 kHz clock (LSE) is needed to allow LPUART communication up to 9600 baud. Therefore, even in Stop mode, the LPUART can wait for an incoming frame while having an extremely low energy consumption. Higher speed clock can be used to reach higher baud rates.

LPUART interface can be served by the DMA controller.

3.39 Serial peripheral interface (SPI)/inter- integrated sound interfaces (I2S)

The devices feature up to six SPIs (SPI2S1, SPI2S2, SPI2S3, SPI4, SPI5 and SPI2S6) that allow communicating up to 150 Mbits/s in master and slave modes, in half-duplex, full-duplex and simplex modes. The 3-bit prescaler gives eight master mode frequencies and the frame is configurable from 4 to 32 bits for SPI1/I2S1, SPI2/I2S2, SPI3/I2S3, and from 4 to 16 bits for the other peripherals.

All SPI interfaces support NSS pulse mode, TI mode, Hardware CRC calculation, and 16x 8-bit embedded Rx and Tx FIFOs (SPI1/I2S1, SPI2/I2S2, SPI3/I2S3), and 8x 8-bit embedded Rx and Tx FIFOs (SPI4, SPI5, SPI6/I2S6), all with DMA capability.

Four standard I^2S interfaces (multiplexed with SPI1, SPI2, SPI3 and SPI6) are available. They can be operated in master or slave mode, in half-, full-duplex or simplex communication mode, and can be configured to operate as a 16-/32-bit resolution input or output channel (except SPI2S6 which is limited to 16 bits). Audio sampling frequencies from 8 kHz up to 192 kHz are supported. When either or both of the I^2S interfaces is/are configured in master mode, the master clock can be output to the external DAC/CODEC at 256 times the sampling frequency. All I^2S interfaces support 16x 8-bit embedded Rx and Tx FIFOs with DMA capability.

3.40 Serial audio interfaces (SAI)

The devices embed two SAIs (SAI1, and SAI4) that allow designing many stereo or mono audio protocols such as I2S, LSB or MSB-justified, PCM/DSP, TDM or AC’97. An SPDIF output is available when the audio block is configured as a transmitter. To bring this level of flexibility and reconfigurability, the SAI contains two independent audio subblocks. Each block has it own clock generator and I/O line controller.
Audio sampling frequencies up to 192 kHz are supported.
In addition, up to six microphones per SAI instance can be supported thanks to an embedded PDM interface, with a maximum of 10 microphones due to pinout constraints.
The SAI can work in master or slave configuration. The audio subblocks can be either receiver or transmitter and can work synchronously or asynchronously (with respect to the other one). The SAI can be connected with other SAIs to work synchronously.

3.41 SPDIFRX Receiver Interface (SPDIFRX)

The SPDIFRX peripheral is designed to receive an S/PDIF flow compliant with IEC-60958 and IEC-61937. These standards support simple stereo streams up to high sample rate, and compressed multichannel surround sound, such as those defined by Dolby or DTS (up to 5.1).

The main SPDIFRX features are the following:

- Up to four inputs available
- Automatic symbol rate detection
- Maximum symbol rate: 12.288 MHz
- Stereo stream from 32 to 192 kHz supported
- Supports Audio IEC-60958 and IEC-61937, consumer applications
- Parity bit management
- Communication using DMA for audio samples
- Communication using DMA for control and user channel information
- Interrupt capabilities

The SPDIFRX receiver provides all the necessary features to detect the symbol rate, and decode the incoming data stream. The user can select the wanted SPDIF input, and when a valid signal is available, the SPDIFRX resamples the incoming signal, decode the Manchester stream, recognize frames, subframes and blocks elements. It delivers to the CPU decoded data, and associated status flags.

The SPDIFRX also offers a signal named spdif_frame_sync, which toggles at the S/PDIF subframe rate that is used to compute the exact sample rate for clock drift algorithms.

3.42 Single wire protocol master interface (SWPMI)

The Single wire protocol master interface (SWPMI) is the master interface corresponding to the Contactless Frontend (CLF) defined in the ETSI TS 102 613 technical specification. The main features are:

- full-duplex communication mode
- automatic SWP bus state management (active, suspend, resume)
- configurable bitrate up to 2 Mbit/s
- automatic SOF, EOF and CRC handling

SWPMI can be served by the DMA controller.

3.43 Management data input/output (MDIO) slaves

The devices embed an MDIO slave interface it includes the following features:

- 32 MDIO Registers addresses, each of which is managed using separate input and output data registers:
  - 32 x 16-bit firmware read/write, MDIO read-only output data registers
  - 32 x 16-bit firmware read-only, MDIO write-only input data registers
- Configurable slave (port) address
- Independently maskable interrupts/events:
  - MDIO Register write
  - MDIO Register read
  - MDIO protocol error
- Able to operate in and wake up from Stop mode

3.44 SD/SDIO/MMC card host interfaces (SDMMC)

Two SDMMC host interfaces are available. They support *MultiMediaCard System Specification Version 4.51* in three different databus modes: 1 bit (default), 4 bits and 8 bits.

Both interfaces support the *SD memory card specifications version 4.1.* and the *SDIO card specification version 4.0.* in two different databus modes: 1 bit (default) and 4 bits.

Each SDMMC host interface supports only one SD/SDIO/MMC card at any one time and a stack of MMC Version 4.51 or previous.

The SDMMC host interface embeds a dedicated DMA controller allowing high-speed transfers between the interface and the SRAM.

3.45 Controller area network (FDCAN1, FDCAN2, FDCAN3)

The controller area network (CAN) subsystem consists of two CAN modules, a shared message RAM memory and a clock calibration unit.

All CAN modules (FDCAN1, FDCAN2, and FDCAN3) are compliant with ISO 11898-1 (CAN protocol specification version 2.0 part A, B) and CAN FD protocol specification version 1.0.

FDCAN1 supports time triggered CAN (TT-FDCAN) specified in ISO 11898-4, including event synchronized time-triggered communication, global system time, and clock drift compensation. The FDCAN1 contains additional registers, specific to the time triggered feature. The CAN FD option can be used together with event-triggered and time-triggered CAN communication.

A 10-Kbyte message RAM memory implements filters, receive FIFOs, receive buffers, transmit event FIFOs, transmit buffers (and triggers for TT-FDCAN). This message RAM is shared between the three modules - FDCAN1 FDCAN2 and FDCAN3.

The common clock calibration unit is optional. It can be used to generate a calibrated clock for FDCAN1, FDCAN2 and FDCAN3 from the HSI internal RC oscillator and the PLL, by evaluating CAN messages received by the FDCAN1.

3.46 Universal serial bus on-the-go high-speed (OTG_HS)

The devices embed a USB OTG high-speed (up to 480 Mbit/s) device/host/OTG peripheral that supports both full-speed and high-speed operations. It integrates the transceivers for full-speed operation (12 Mbit/s) and a UTMI low-pin interface (ULPI) for high-speed operation (480 Mbit/s). When using the USB OTG_HS interface in HS mode, an external PHY device connected to the ULPI is required.

The USB OTG_HS peripheral is compliant with the USB 2.0 specification and with the OTG 2.0 specification. It features software-configurable endpoint setting and supports suspend/resume. The USB OTG_HS controller requires a dedicated 48 MHz clock that is generated by a PLL connected to the HSE oscillator.

The main features are:

- Combined Rx and Tx FIFO size of 4 Kbytes with dynamic FIFO sizing
- Supports the session request protocol (SRP) and host negotiation protocol (HNP)
- 8 bidirectional endpoints
- 16 host channels with periodic OUT support
- Software configurable to OTG1.3 and OTG2.0 modes of operation
- USB 2.0 LPM (Link Power Management) support
- Battery Charging Specification Revision 1.2 support
- Internal FS OTG PHY support
- External HS or HS OTG operation supporting ULPI in SDR mode The OTG PHY is connected to the microcontroller ULPI port through 12 signals. It can be clocked using the 60 MHz output.
- Internal USB DMA
- HNP/SNP/IP inside (no need for any external resistor)
- For OTG/Host modes, a power switch is needed in case bus-powered devices are connected

3.47 Ethernet MAC interface with dedicated DMA controller (ETH)

The devices provide an IEEE-802.3-2002-compliant media access controller (MAC) for ethernet LAN communications through an industry-standard medium-independent interface (MII) or a reduced medium-independent interface (RMII). The microcontroller requires an external physical interface device (PHY) to connect to the physical LAN bus (twisted-pair, fiber, etc.). The PHY is connected to the device MII port using 17 signals for MII or 9 signals for RMII, and can be clocked using the 25 MHz (MII) from the microcontroller.

The devices include the following features:

- Supports 10 and 100 Mbit/s rates
- Dedicated DMA controller allowing high-speed transfers between the dedicated SRAM and the descriptors
- Tagged MAC frame support (VLAN support)
- Half-duplex (CSMA/CD) and full-duplex operation
- MAC control sublayer (control frames) support
- 32-bit CRC generation and removal
- Several address filtering modes for physical and multicast address (multicast and group addresses)
- 32-bit status code for each transmitted or received frame
- Internal FIFOs to buffer transmit and receive frames. The transmit FIFO and the receive FIFO are both 2 Kbytes.
- Supports hardware PTP (precision time protocol) in accordance with IEEE 1588 2008 (PTP V2) with the time stamp comparator connected to the TIM2 input
- Triggers interrupt when system time becomes greater than target time

3.48 High-definition multimedia interface (HDMI) - consumer electronics control (CEC)

The devices embed a HDMI-CEC controller that provides hardware support for the Consumer Electronics Control (CEC) protocol (Supplement 1 to the HDMI standard).

This protocol provides high-level control functions between all audiovisual products in an environment. It is specified to operate at low speeds with minimum processing and memory overhead. It has a clock domain independent from the CPU clock, allowing the HDMI-CEC controller to wake up the MCU from Stop mode on data reception.

3.49 Debug infrastructure

The devices offer a comprehensive set of debug and trace features to support software development and system integration.

- Breakpoint debugging
- Code execution tracing
- Software instrumentation
- JTAG debug port
- Serial-wire debug port
- Trigger input and output
- Serial-wire trace port
- Trace port
- Arm® CoreSight™ debug and trace components

The debug can be controlled via a JTAG/Serial-wire debug access port, using industry-standard debugging tools. The trace port performs data capture for logging and analysis.

4 Memory mapping

Refer to the product line reference manual for details on the memory mapping as well as the boundary addresses for all peripherals.

5 Pinouts, pin descriptions and alternate functions

Figure 4. TFBGA100 pinout (without SMPS)

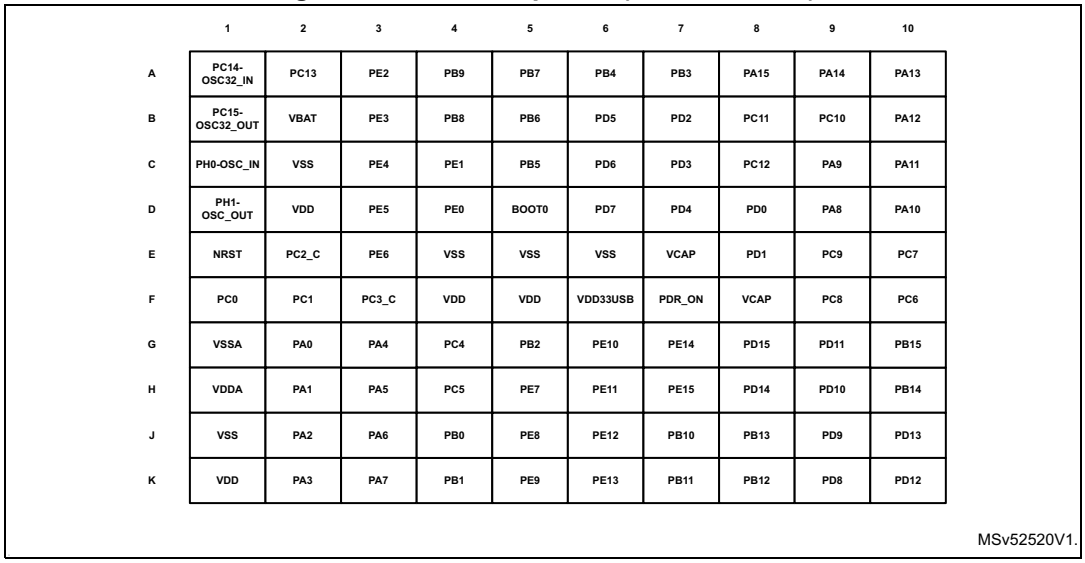

1. The above figure shows the package top view.

Figure 5. LQFP100 pinout (without SMPS)

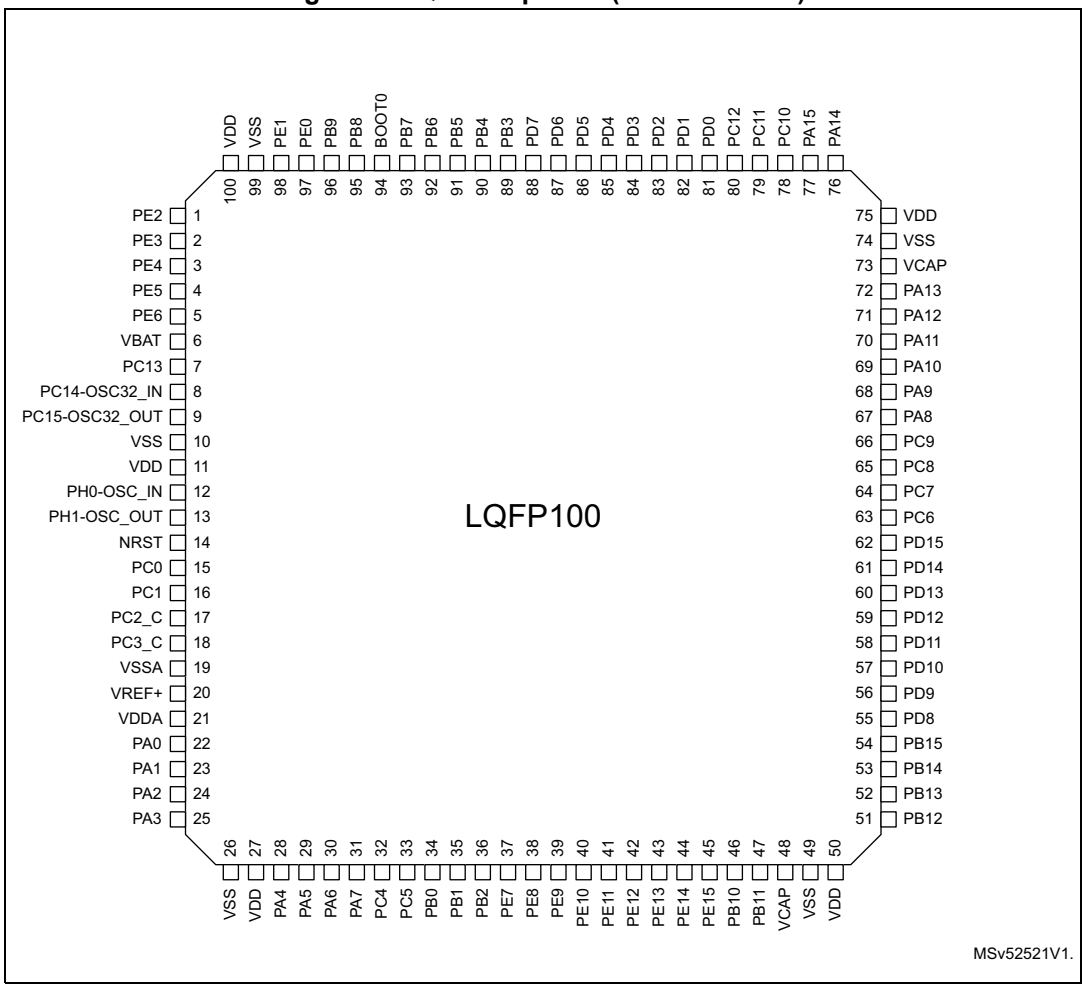

1. The above figure shows the package top view.

Figure 6. TFBGA144 ballout (without SMPS)

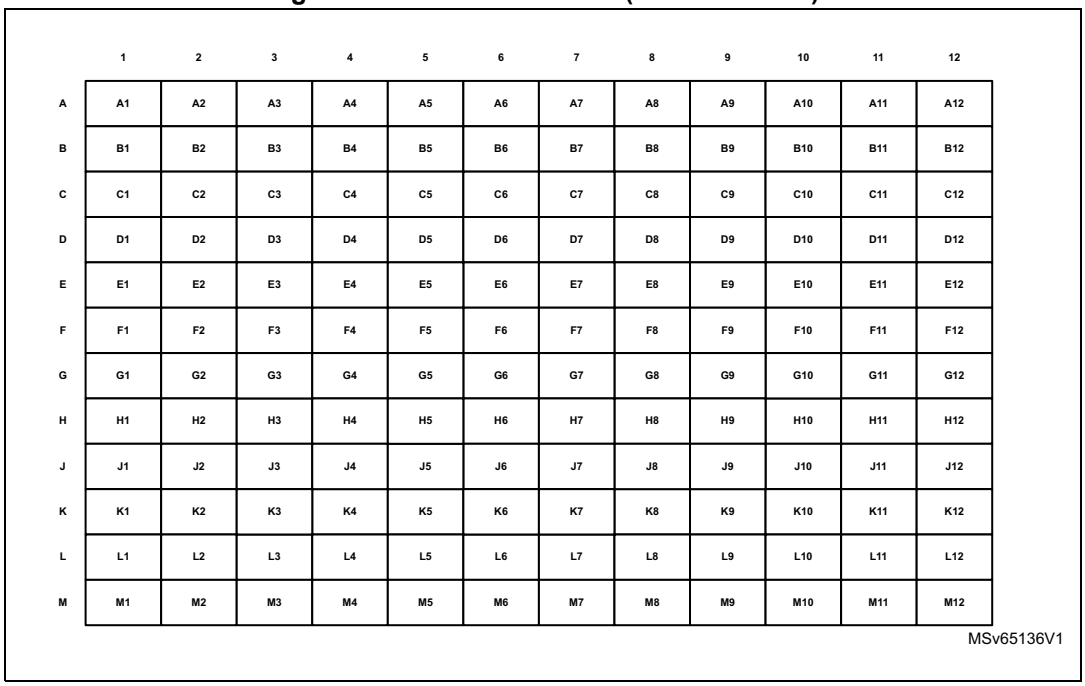

1. The above figure shows the package top view.

Figure 7. LQFP144 pinout (without SMPS)

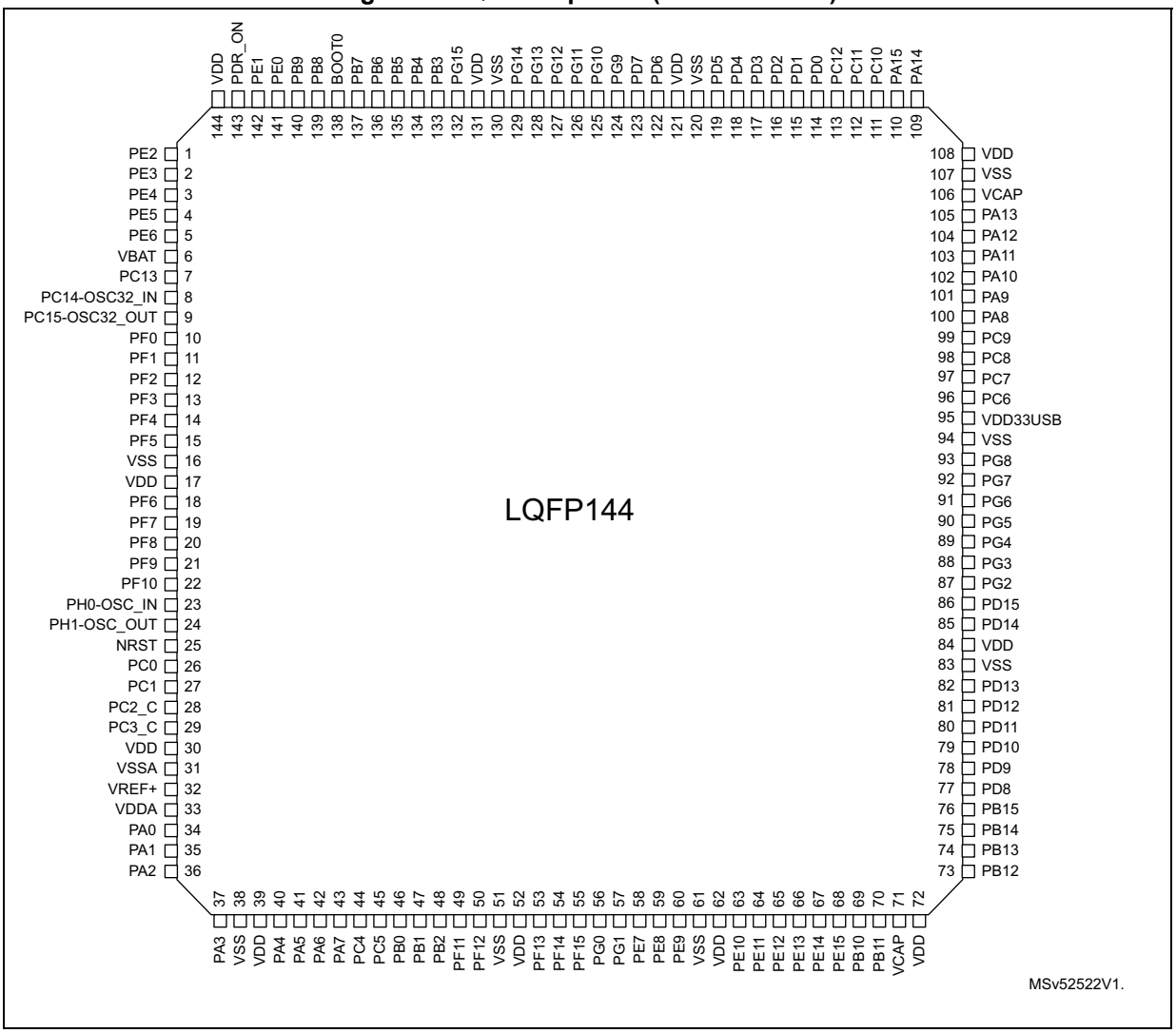

1. The above figure shows the package top view.

Figure 8. LQFP176 pinout (with SMPS)

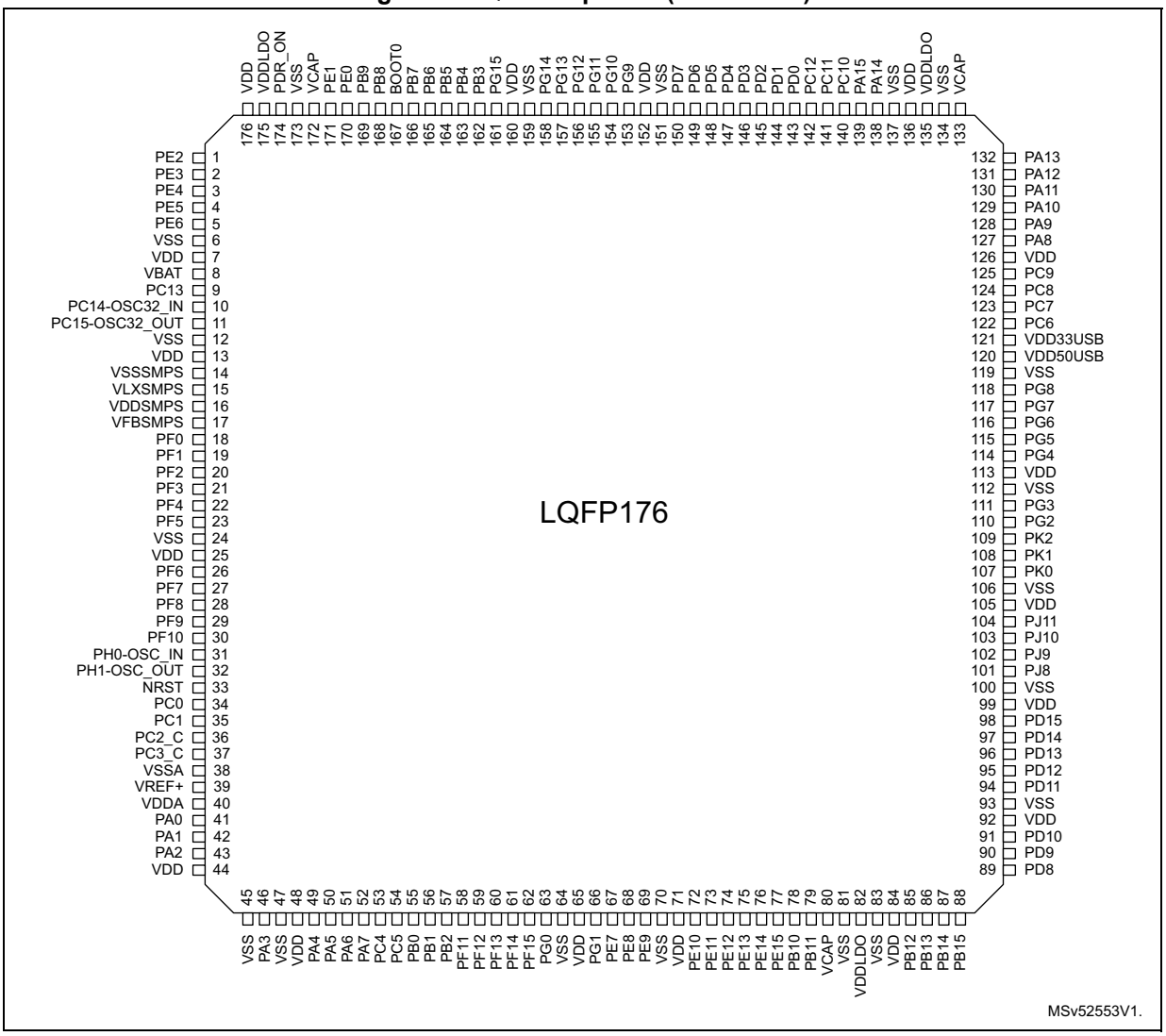

1. The above figure shows the package top view.

Figure 9. UFBGA169 ballout (with SMPS)

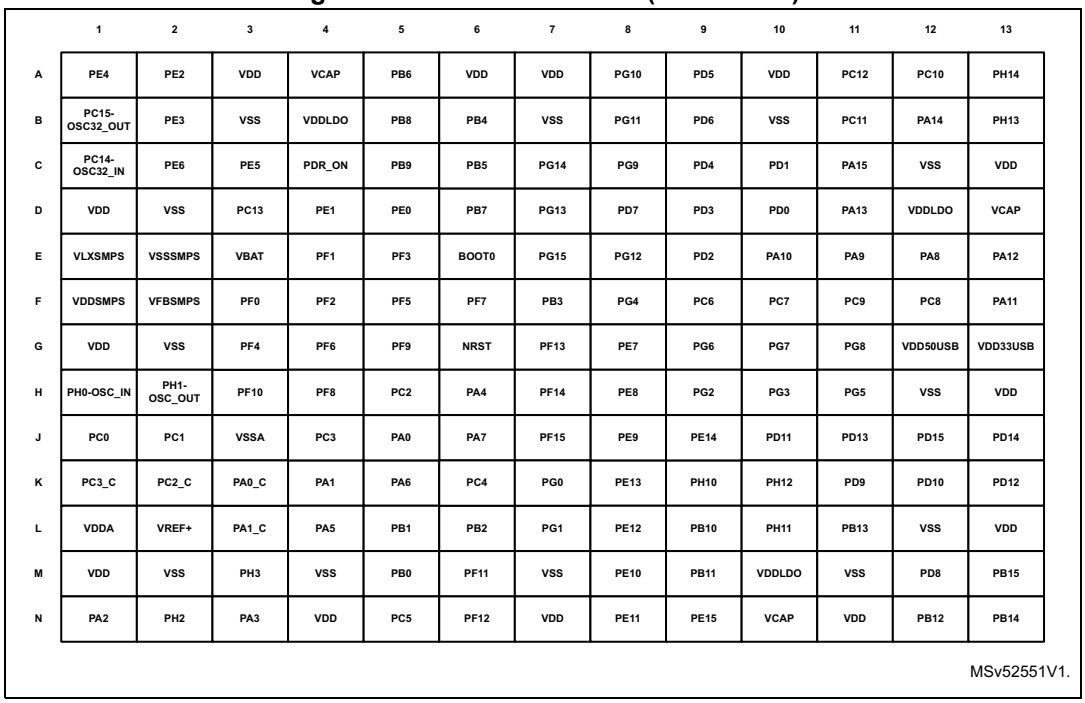

	1	2	3	4	5	6	7	8	9	10	11	12	13
A	PE4	PE2	VDD	VCAP	PB6	VDD	VDD	PG10	PD5	VDD	PC12	PC10	PH14
B	PC15-OSC32_OUT	PE3	VSS	VDDLDO	PB8	PB4	VSS	PG11	PD6	VSS	PC11	PA14	PH13
C	PC14-OSC32_IN	PE6	PE5	PDR_ON	PB9	PB5	PG14	PG9	PD4	PD1	PA15	VSS	VDD
D	VDD	VSS	PC13	PE1	PE0	PB7	PG13	PD7	PD3	PD0	PA13	VDDLDO	VCAP
E	VLXSMPS	VSSSMPS	VBAT	PF1	PF3	BOOT0	PG15	PG12	PD2	PA10	PA9	PA8	PA12
F	VDDSMPS	VFBSMPS	PF0	PF2	PF5	PF7	PB3	PG4	PC6	PC7	PC9	PC8	PA11
G	VDD	VSS	PF4	PF6	PF9	NRST	PF13	PE7	PG6	PG7	PG8	VDD50USB	VDD33USB
H	PH0-OSC_IN	PH1-OSC_OUT	PF10	PF8	PC2	PA4	PF14	PE8	PG2	PG3	PG5	VSS	VDD
J	PC0	PC1	VSSA	PC3	PA0	PA7	PF15	PE9	PE14	PD11	PD13	PD15	PD14
K	PC3_C	PC2_C	PA0_C	PA1	PA6	PC4	PG0	PE13	PH10	PH12	PD9	PD10	PD12
L	VDDA	VREF+	PA1_C	PA5	PB1	PB2	PG1	PE12	PB10	PH11	PB13	VSS	VDD
M	VDD	VSS	PH3	VSS	PB0	PF11	VSS	PE10	PB11	VDDLDO	VSS	PD8	PB15
N	PA2	PH2	PA3	VDD	PC5	PF12	VDD	PE11	PE15	VCAP	VDD	PB12	PB14

MSv52551V1.

1. The above figure shows the package top view.

Figure 10. UFBGA176+25 ballout (with SMPS)

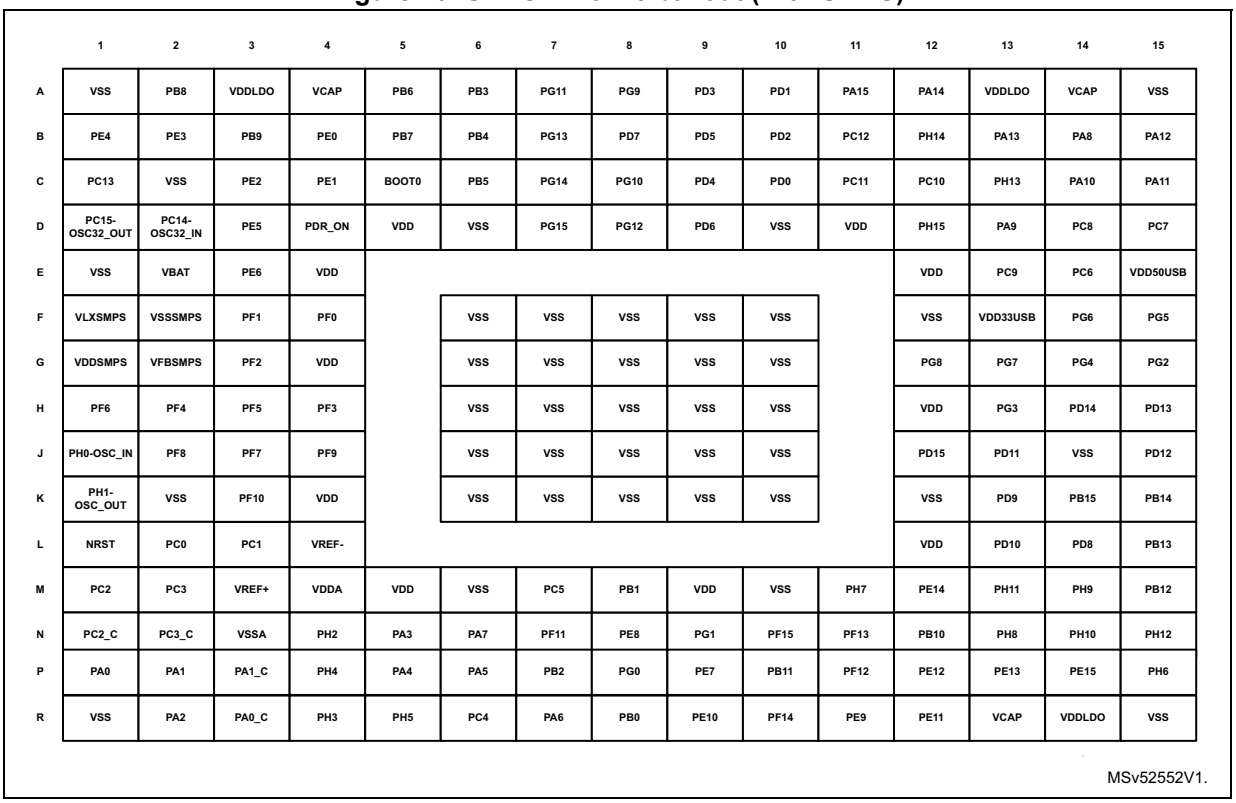

	1	2	3	4	5	6	7	8	9	10	11	12	13	14	15
A	VSS	PB8	VDDLDO	VCAP	PB6	PB3	PG11	PG9	PD3	PD1	PA15	PA14	VDDLDO	VCAP	VSS
B	PE4	PE3	PB9	PE0	PB7	PB4	PG13	PD7	PD5	PD2	PC12	PH14	PA13	PA8	PA12
C	PC13	VSS	PE2	PE1	BOOT0	PB5	PG14	PG10	PD4	PD0	PC11	PC10	PH13	PA10	PA11
D	PC15-OSC32_OUT	PC14-OSC32_IN	PE5	PDR_ON	VDD	VSS	PG15	PG12	PD6	VSS	VDD	PH15	PA9	PC8	PC7
E	VSS	VBAT	PE6	VDD								VDD	PC9	PC6	VDD50USB
F	VLXSMPS	VSSSMPS	PF1	PF0		VSS	VSS	VSS	VSS	VSS		VSS	VDD33USB	PG6	PG5
G	VDDSMPS	VFBSMPS	PF2	VDD		VSS	VSS	VSS	VSS	VSS		PG8	PG7	PG4	PG2
H	PF6	PF4	PF5	PF3		VSS	VSS	VSS	VSS	VSS		VDD	PG3	PD14	PD13
J	PH0-OSC_IN	PF8	PF7	PF9		VSS	VSS	VSS	VSS	VSS		PD15	PD11	VSS	PD12
K	PH1-OSC_OUT	VSS	PF10	VDD		VSS	VSS	VSS	VSS	VSS		VSS	PD9	PB15	PB14
L	NRST	PC0	PC1	VREF-								VDD	PD10	PD8	PB13
M	PC2	PC3	VREF+	VDDA	VDD	VSS	PC5	PB1	VDD	VSS	PH7	PE14	PH11	PH9	PB12
N	PC2_C	PC3_C	VSSA	PH2	PA3	PA7	PF11	PE8	PG1	PF15	PF13	PB10	PH8	PH10	PH12
P	PA0	PA1	PA1_C	PH4	PA4	PA5	PB2	PG0	PE7	PB11	PF12	PE12	PE13	PE15	PH6
R	VSS	PA2	PA0_C	PH3	PH5	PC4	PA6	PB0	PE10	PF14	PE9	PE11	VCAP	VDDLDO	VSS

MSv52552V1.

1. The above figure shows the package top view.

Table 6. Legend/abbreviations used in the pinout table

Name		Abbreviation	Definition
Pin name		Unless otherwise specified in brackets below the pin name, the pin function during and after reset is the same as the actual pin name	
Pin type		S	Supply pin
		I	Input only pin
		I/O	Input / output pin
		ANA	Analog-only Input
I/O structure		FT	5 V tolerant I/O
		TT	3.3 V tolerant I/O
		B	Dedicated BOOT0 pin
		RST	Bidirectional reset pin with embedded weak pull-up resistor
		Option for TT and FT I/Os	
		_f	I2C FM+ option
		_a	analog option (supplied by V_{DDA})
		_u	USB option (supplied by $V_{DD33USB}$)
		_h	High-speed low-voltage I/O
Notes		Unless otherwise specified by a note, all I/Os are set as floating inputs during and after reset.	
Pin functions	Alternate functions	Functions selected through GPIOx_AFR registers	
	Additional functions	Functions directly selected/enabled through peripheral registers	

Table 7. STM32H730xB pin and ball descriptions

Pin Number							Pin name (function after reset)	Pin type	I/O structure	Notes	Alternate functions	Additional functions
TFBGA100	LQFP100	LQFP144	UFBGA144	UFBGA169	UFBGA176+25	LQFP176						
A3	1	1	A3	A2	C3	1	PE2	I/O	FT_h	-	TRACECLK, SAI1_CK1, USART10_RX, SPI4_SCK, SAI1_MCLK_A, SAI4_MCLK_A, OCTOSPIM_P1_IO2, SAI4_CK1, ETH_MII_TXD3, FMC_A23, EVENTOUT	-
B3	2	2	A2	B2	B2	2	PE3	I/O	FT_h	-	TRACED0, TIM15_BKIN, SAI1_SD_B, SAI4_SD_B, USART10_TX, FMC_A19, EVENTOUT	-
C3	3	3	B2	A1	B1	3	PE4	I/O	FT_h	-	TRACED1, SAI1_D2, DFSDM1_DATIN3, TIM15_CH1N, SPI4_NSS, SAI1_FS_A, SAI4_FS_A, SAI4_D2, FMC_A20, DCMI_D4/PSSI_D4, LCD_B0, EVENTOUT	-
D3	4	4	B3	C3	D3	4	PE5	I/O	FT_h	-	TRACED2, SAI1_CK2, DFSDM1_CKIN3, TIM15_CH1, SPI4_MISO, SAI1_SCK_A, SAI4_SCK_A, SAI4_CK2, FMC_A21, DCMI_D6/PSSI_D6, LCD_G0, EVENTOUT	-
E3	5	5	B4	C2	E3	5	PE6	I/O	FT_h	-	TRACED3, TIM1_BKIN2, SAI1_D1, TIM15_CH2, SPI4_MOSI, SAI1_SD_A, SAI4_SD_A, SAI4_D1, SAI4_MCLK_B, TIM1_BKIN2_COMP12, FMC_A22, DCMI_D7/PSSI_D7, LCD_G1, EVENTOUT	-
-	-	-	-	-	-	6	VSS	S	-	-	-	-
-	-	-	-	-	-	7	VDD	S	-	-	-	-
B2	6	6	C2	E3	E2	8	VBAT	S	-	-	-	-
A2	7	7	A1	D3	C1	9	PC13	I/O	FT	-	EVENTOUT	RTC_TAMP1/ RTC_TS, WKUP4
A1	8	8	B1	C1	D2	10	PC14-OSC32_IN	I/O	FT	-	EVENTOUT	OSC32_IN

Table 7. STM32H730xB pin and ball descriptions (continued)

Pin Number							Pin name (function after reset)	Pin type	I/O structure	Notes	Alternate functions	Additional functions
TFBGA100	LQFP100	LQFP144	UFBGA144	UFBGA169	UFBGA176+25	LQFP176						
B1	9	9	C1	B1	D1	11	PC15-OSC32_OUT	I/O	FT	-	EVENTOUT	OSC32_OUT
-	-	-	-	-	-	12	VSS	S	-	-	-	-
-	-	-	-	-	-	13	VDD	S	-	-	-	-
-	-	-	-	E2	F2	14	VSSSMPS	S	-	-	-	-
-	-	-	-	E1	F1	15	VLXSMPS	S	-	-	-	-
-	-	-	-	F1	G1	16	VDDSMPS	S	-	-	-	-
-	-	-	-	F2	G2	17	VFBSMPS	S	-	-	-	-
-	-	10	C3	F3	F4	18	PF0	I/O	FT_fh	-	I2C2_SDA(boot), I2C5_SDA, OCTOSPIM_P2_IO0, FMC_A0, TIM23_CH1, EVENTOUT	-
-	-	11	C4	E4	F3	19	PF1	I/O	FT_fh	-	I2C2_SCL(boot), I2C5_SCL, OCTOSPIM_P2_IO1, FMC_A1, TIM23_CH2, EVENTOUT	-
-	-	12	D4	F4	G3	20	PF2	I/O	FT_h	-	I2C2_SMBA, I2C5_SMBA, OCTOSPIM_P2_IO2, FMC_A2, TIM23_CH3, EVENTOUT	-
-	-	13	E2	E5	H4	21	PF3	I/O	FT_ha	-	OCTOSPIM_P2_IO3, FMC_A3, TIM23_CH4, EVENTOUT	ADC3_INP5
-	-	14	E3	G3	H2	22	PF4	I/O	FT_ha	-	OCTOSPIM_P2_CLK, FMC_A4, EVENTOUT	ADC3_INN5, ADC3_INP9
-	-	15	E4	F5	H3	23	PF5	I/O	FT_ha	-	OCTOSPIM_P2_NCLK, FMC_A5, EVENTOUT	ADC3_INP4
-	10	16	-	-	-	24	VSS	S	-	-	-	-
-	11	17	-	-	-	25	VDD	S	-	-	-	-
-	-	18	F3	G4	H1	26	PF6	I/O	FT_ha	-	TIM16_CH1, FDCAN3_RX, SPI5_NSS, SAI1_SD_B, UART7_RX, SAI4_SD_B, OCTOSPIM_P1_IO3, TIM23_CH1, EVENTOUT	ADC3_INN4, ADC3_INP8

Table 7. STM32H730xB pin and ball descriptions (continued)

Pin Number							Pin name (function after reset)	Pin type	I/O structure	Notes	Alternate functions	Additional functions
TFBGA100	LQFP100	LQFP144	UFBGA144	UFBGA169	UFBGA176+25	LQFP176						
-	-	19	F2	F6	J3	27	PF7	I/O	FT_ha	-	TIM17_CH1, FDCAN3_TX, SPI5_SCK, SAI1_MCLK_B, UART7_TX, SAI4_MCLK_B, OCTOSPIM_P1_IO2, TIM23_CH2, EVENTOUT	ADC3_INP3
-	-	20	G3	H4	J2	28	PF8	I/O	FT_ha	-	TIM16_CH1N, SPI5_MISO, SAI1_SCK_B, UART7_RTS/UART7_DE, SAI4_SCK_B, TIM13_CH1, OCTOSPIM_P1_IO0, TIM23_CH3, EVENTOUT	ADC3_INN3, ADC3_INP7
-	-	21	G2	G5	J4	29	PF9	I/O	FT_ha	-	TIM17_CH1N, SPI5_MOSI, SAI1_FS_B, UART7_CTS, SAI4_FS_B, TIM14_CH1, OCTOSPIM_P1_IO1, TIM23_CH4, EVENTOUT	ADC3_INP2
-	-	22	G1	H3	K3	30	PF10	I/O	FT_ha	-	TIM16_BKIN, SAI1_D3, PSSI_D15, OCTOSPIM_P1_CLK, SAI4_D3, DCMI_D11/PSSI_D11, LCD_DE, EVENTOUT	ADC3_INN2, ADC3_INP6
C1	12	23	D1	H1	J1	31	PH0-OSC_IN	I/O	FT	-	EVENTOUT	OSC_IN
D1	13	24	E1	H2	K1	32	PH1-OSC_OUT	I/O	FT	-	EVENTOUT	OSC_OUT
E1	14	25	F1	G6	L1	33	NRST	I/O	RST	-	-	-
F1	15	26	H1	J1	L2	34	PC0	I/O	FT_ha	-	FMC_D12/FMC_AD12, DFSDM1_CKIN0, DFSDM1_DATIN4, SAI4_FS_B, FMC_A25, OTG_HS_ULPI_STP, LCD_G2, FMC_SDNWE, LCD_R5, EVENTOUT	ADC123_INP10
F2	16	27	H2	J2	L3	35	PC1	I/O	FT_ha	-	TRACED0, SAI4_D1, SAI1_D1, DFSDM1_DATIN0, DFSDM1_CKIN4, SPI2_MOSI/I2S2_SDO, SAI1_SD_A, SAI4_SD_A, SDMMC2_CK, OCTOSPIM_P1_IO4, ETH_MDC, MDIOS_MDC, LCD_G5, EVENTOUT	ADC123_INN10, ADC123_INP11, RTC_TAMP3, WKUP6

Table 7. STM32H730xB pin and ball descriptions (continued)

Pin Number							Pin name (function after reset)	Pin type	I/O structure	Notes	Alternate functions	Additional functions
TFBGA100	LQFP100	LQFP144	UFBGA144	UFBGA169	UFBGA176+25	LQFP176						
-	-	-	H3	H5 (1)	M1 (1)	-	PC2	I/O	FT_a	-	PWR_DEEPSLEEP, DFSDM1_CKIN1, OCTOSPIM_P1_IO5, SPI2_MISO/I2S2_SDI, DFSDM1_CKOUT, OCTOSPIM_P1_IO2, OTG_HS_ULPI_DIR, ETH_MII_TXD2, FMC_SDNE0, EVENTOUT	ADC123_INN11, ADC123_INP12
E2 (2)	17 (2)	28 (2)	-	K2 (1)	N1 (1)	36 (2)	PC2_C(3)	ANA	TT_a	-	-	ADC3_INN1, ADC3_INP0
-	-	-	H4	J4 (1)	M2 (1)	-	PC3	I/O	FT_a	-	PWR_SLEEP, DFSDM1_DATIN1, OCTOSPIM_P1_IO6, SPI2_MOSI/I2S2_SDO, OCTOSPIM_P1_IO0, OTG_HS_ULPI_NXT, ETH_MII_TX_CLK, FMC_SDCKE0, EVENTOUT	ADC12_INN12, ADC12_INP13
F3 (2)	18 (2)	29 (2)	-	K1 (1)	N2 (1)	37 (2)	PC3_C(3)	ANA	TT_a	-	-	ADC3_INP1
-	-	30	-	-	-	-	VDD	S	-	-	-	-
G1	19	31	J1	J3	N3	38	VSSA	S	-	-	-	-
-	-	-	K1	-	L4	-	VREF-	S	-	-	-	-
-	20	32	L1	L2	M3	39	VREF+	S	-	-	-	-
H1	21	33	M1	L1	M4	40	VDDA	S	-	-	-	-
G2	22	34	J2	J5 (1)	P1 (1)	41	PA0	I/O	FT_ha	-	TIM2_CH1/TIM2_ETR, TIM5_CH1, TIM8_ETR, TIM15_BKIN, SPI6_NSS/I2S6_WS, USART2_CTS/USART2_NSS, UART4_TX, SDMMC2_CMD, SAI4_SD_B, ETH_MII_CRS, FMC_A19, EVENTOUT	ADC1_INP16, WKUP1
-	-	-	-	K3 (1)	R3 (1)	-	PA0_C(3)	ANA	TT_a	-	-	ADC12_INN1, ADC12_INP0

Table 7. STM32H730xB pin and ball descriptions (continued)

Pin Number							Pin name (function after reset)	Pin type	I/O structure	Notes	Alternate functions	Additional functions
TFBGA100	LQFP100	LQFP144	UFBGA144	UFBGA169	UFBGA176+25	LQFP176						
H2	23	35	K2	K4 (1)	P2 (1)	42	PA1	I/O	FT_ha	-	TIM2_CH2, TIM5_CH2, LPTIM3_OUT, TIM15_CH1N, USART2_RTS/USART2_DE, UART4_RX, OCTOSPIM_P1_IO3, SAI4_MCLK_B, ETH_MII_RX_CLK/ETH_RMII_REF_CLK, OCTOSPIM_P1_DQS, LCD_R2, EVENTOUT	ADC1_INN16, ADC1_INP17
-	-	-	-	L3 (1)	P3 (1)	-	PA1_C(3)	ANA	TT_a	-	-	ADC12_INP1
J2	24	36	L2	N1	R2	43	PA2	I/O	FT_ha	-	TIM2_CH3, TIM5_CH3, LPTIM4_OUT, TIM15_CH1, OCTOSPIM_P1_IO0, USART2_TX(boot), SAI4_SCK_B, ETH_MDIO, MDIOS_MDIO, LCD_R1, EVENTOUT	ADC12_INP14, WKUP2
-	-	-	-	N2	N4	-	PH2	I/O	FT_ha	-	LPTIM1_IN2, OCTOSPIM_P1_IO4, SAI4_SCK_B, ETH_MII_CRS, FMC_SDCKE0, LCD_R0, EVENTOUT	ADC3_INP13
-	-	-	-	-	-	44	VDD	S	-	-	-	-
-	-	-	-	-	-	45	VSS	S	-	-	-	-
-	-	-	-	M3	R4	-	PH3	I/O	FT_ha	-	OCTOSPIM_P1_IO5, SAI4_MCLK_B, ETH_MII_COL, FMC_SDNE0, LCD_R1, EVENTOUT	ADC3_INN13, ADC3_INP14
-	-	-	-	-	P4	-	PH4	I/O	FT_fa	-	I2C2_SCL, LCD_G5, OTG_HS_ULPI_NXT, PSSI_D14, LCD_G4, EVENTOUT	ADC3_INN14, ADC3_INP15
-	-	-	-	-	R5	-	PH5	I/O	FT_fha	-	I2C2_SDA, SPI5_NSS, FMC_SDNWE, EVENTOUT	ADC3_INN15

Table 7. STM32H730xB pin and ball descriptions (continued)

Pin Number							Pin name (function after reset)	Pin type	I/O structure	Notes	Alternate functions	Additional functions
TFBGA100	LQFP100	LQFP144	UFBGA144	UFBGA169	UFBGA176+25	LQFP176						
K2	25	37	M2	N3	N5	46	PA3	I/O	FT_ha	-	TIM2_CH4, TIM5_CH4, LPTIM5_OUT, TIM15_CH2, I2S6_MCK, OCTOSPIM_P1_IO2, USART2_RX(boot), LCD_B2, OTG_HS_ULPI_D0, ETH_MII_COL, OCTOSPIM_P1_CLK, LCD_B5, EVENTOUT	ADC12_INP15
-	26	38	-	-	-	47	VSS	S	-	-	-	-
-	27	39	-	-	-	48	VDD	S	-	-	-	-
G3	28	40	J3	H6	P5	49	PA4	I/O	TT_ha	-	D1PWREN, TIM5_ETR, SPI1_NSS(boot)/I2S1_WS, SPI3_NSS/I2S3_WS, USART2_CK, SPI6_NSS/I2S6_WS, FMC_D8/FMC_AD8, DCMI_HSYNC/PSSI_DE, LCD_VSYNC, EVENTOUT	ADC12_INP18, DAC1_OUT1
H3	29	41	K3	L4	P6	50	PA5	I/O	TT_ha	-	D2PWREN, TIM2_CH1/TIM2_ETR, TIM8_CH1N, SPI1_SCK(boot)/I2S1_CK, SPI6_SCK/I2S6_CK, OTG_HS_ULPI_CK, FMC_D9/FMC_AD9, PSSI_D14, LCD_R4, EVENTOUT	ADC12_INN18, ADC12_INP19, DAC1_OUT2
J3	30	42	L3	K5	R7	51	PA6	I/O	FT_ha	-	TIM1_BKIN, TIM3_CH1, TIM8_BKIN, SPI1_MISO(boot)/I2S1_SDI, OCTOSPIM_P1_IO3, SPI6_MISO/I2S6_SDI, TIM13_CH1, TIM8_BKIN_COMP12, MDIOS_MDC, TIM1_BKIN_COMP12, DCMI_PIXCLK/PSSI_PDCK, LCD_G2, EVENTOUT	ADC12_INP3

Table 7. STM32H730xB pin and ball descriptions (continued)

Pin Number							Pin name (function after reset)	Pin type	I/O structure	Notes	Alternate functions	Additional functions
TFBGA100	LQFP100	LQFP144	UFBGA144	UFBGA169	UFBGA176+25	LQFP176						
K3	31	43	M3	J6	N6	52	PA7	I/O	TT_ha	-	TIM1_CH1N, TIM3_CH2, TIM8_CH1N, SPI1_MOSI(boot)/I2S1_SDO, SPI6_MOSI/I2S6_SDO, TIM14_CH1, OCTOSPIM_P1_IO2, ETH_MII_RX_DV/ETH_RMII_CRS_DV, FMC_SDNWE, LCD_VSYNC, EVENTOUT	ADC12_INN3, ADC12_INP7, OPAMP1_VINM
G4	32	44	J4	K6	R6	53	PC4	I/O	TT_ha	-	PWR_DEEPSLEEP, FMC_A22, DFSDM1_CKIN2, I2S1_MCK, SPDIFRX1_IN3, SDMMC2_CKIN, ETH_MII_RXD0/ETH_RMII_RXD0, FMC_SDNE0, LCD_R7, EVENTOUT	ADC12_INP4, OPAMP1_VOUT, COMP1_INM
H4	33	45	K4	N5	M7	54	PC5	I/O	TT_ha	-	PWR_SLEEP, SAI4_D3, SAI1_D3, DFSDM1_DATIN2, PSSI_D15, SPDIFRX1_IN4, OCTOSPIM_P1_DQS, ETH_MII_RXD1/ETH_RMII_RXD1, FMC_SDCKE0, COMP1_OUT, LCD_DE, EVENTOUT	ADC12_INN4, ADC12_INP8, OPAMP1_VINM
J4	34	46	L4	M5	R8	55	PB0	I/O	TT_ha	-	TIM1_CH2N, TIM3_CH3, TIM8_CH2N, OCTOSPIM_P1_IO1, DFSDM1_CKOUT, UART4_CTS, LCD_R3, OTG_HS_ULPI_D1, ETH_MII_RXD2, LCD_G1, EVENTOUT	ADC12_INN5, ADC12_INP9, OPAMP1_VINP, COMP1_INP
K4	35	47	M4	L5	M8	56	PB1	I/O	FT_ha	-	TIM1_CH3N, TIM3_CH4, TIM8_CH3N, OCTOSPIM_P1_IO0, DFSDM1_DATIN1, LCD_R6, OTG_HS_ULPI_D2, ETH_MII_RXD3, LCD_G0, EVENTOUT	ADC12_INP5, COMP1_INM

Table 7. STM32H730xB pin and ball descriptions (continued)

Pin Number							Pin name (function after reset)	Pin type	I/O structure	Notes	Alternate functions	Additional functions
TFBGA100	LQFP100	LQFP144	UFBGA144	UFBGA169	UFBGA176+25	LQFP176						
G5	36	48	J5	L6	P7	57	PB2	I/O	FT_ha	-	RTC_OUT, SAI4_D1, SAI1_D1, DFSDM1_CKIN1, SAI1_SD_A, SPI3_MOSI/I2S3_SDO, SAI4_SD_A, OCTOSPIM_P1_CLK, OCTOSPIM_P1_DQS, ETH_TX_ER, TIM23_ETR, EVENTOUT	COMP1_INP
-	-	49	M5	M6	N7	58	PF11	I/O	FT_ha	-	SPI5_MOSI, OCTOSPIM_P1_NCLK, SAI4_SD_B, FMC_NRAS, DCMI_D12/PSSI_D12, TIM24_CH1, EVENTOUT	ADC1_INP2
-	-	50	L5	N6	P11	59	PF12	I/O	FT_ha	-	OCTOSPIM_P2_DQS, FMC_A6, TIM24_CH2, EVENTOUT	ADC1_INN2, ADC1_INP6
-	-	51	-	-	-	-	VSS	S	-	-	-	-
-	-	52	-	-	-	-	VDD	S	-	-	-	-
-	-	53	K5	G7	N11	60	PF13	I/O	FT_ha	-	DFSDM1_DATIN6, I2C4_SMBA, FMC_A7, TIM24_CH3, EVENTOUT	ADC2_INP2
-	-	54	M6	H7	R10	61	PF14	I/O	FT_fha	-	DFSDM1_CKIN6, I2C4_SCL, FMC_A8, TIM24_CH4, EVENTOUT	ADC2_INN2, ADC2_INP6
-	-	55	L6	J7	N10	62	PF15	I/O	FT_fh	-	I2C4_SDA, FMC_A9, EVENTOUT	-
-	-	56	K6	K7	P8	63	PG0	I/O	FT_h	-	OCTOSPIM_P2_IO4, UART9_RX, FMC_A10, EVENTOUT	-
-	-	-	-	-	-	64	VSS	S	-	-	-	-
-	-	-	-	-	-	65	VDD	S	-	-	-	-
-	-	57	J6	L7	N9	66	PG1	I/O	TT_h	-	OCTOSPIM_P2_IO5, UART9_TX, FMC_A11, EVENTOUT	OPAMP2_VINM
H5	37	58	M7	G8	P9	67	PE7	I/O	TT_ha	-	TIM1_ETR, DFSDM1_DATIN2, UART7_RX, OCTOSPIM_P1_IO4, FMC_D4/FMC_AD4, EVENTOUT	OPAMP2_VOUT, COMP2_INM

Table 7. STM32H730xB pin and ball descriptions (continued)

Pin Number							Pin name (function after reset)	Pin type	I/O structure	Notes	Alternate functions	Additional functions
TFBGA100	LQFP100	LQFP144	UFBGA144	UFBGA169	UFBGA176+25	LQFP176						
J5	38	59	L7	H8	N8	68	PE8	I/O	TT_ha	-	TIM1_CH1N, DFSDM1_CKIN2, UART7_TX, OCTOSPIM_P1_IO5, FMC_D5/FMC_AD5, COMP2_OUT, EVENTOUT	OPAMP2_VINM
K5	39	60	K7	J8	R11	69	PE9	I/O	TT_ha	-	TIM1_CH1, DFSDM1_CKOUT, UART7_RTS/UART7_DE, OCTOSPIM_P1_IO6, FMC_D6/FMC_AD6, EVENTOUT	OPAMP2_VINP, COMP2_INP
-	-	61	-	-	-	70	VSS	S	-	-	-	-
-	-	62	-	-	-	71	VDD	S	-	-	-	-
G6	40	63	J7	M8	R9	72	PE10	I/O	FT_ha	-	TIM1_CH2N, DFSDM1_DATIN4, UART7_CTS, OCTOSPIM_P1_IO7, FMC_D7/FMC_AD7, EVENTOUT	COMP2_INM
H6	41	64	H8	N8	R12	73	PE11	I/O	FT_ha	-	TIM1_CH2, DFSDM1_CKIN4, SPI4_NSS(boot), SAI4_SD_B, OCTOSPIM_P1_NCS, FMC_D8/FMC_AD8, LCD_G3, EVENTOUT	COMP2_INP
J6	42	65	J8	L8	P12	74	PE12	I/O	FT_h	-	TIM1_CH3N, DFSDM1_DATIN5, SPI4_SCK(boot), SAI4_SCK_B, FMC_D9/FMC_AD9, COMP1_OUT, LCD_B4, EVENTOUT	-
K6	43	66	K8	K8	P13	75	PE13	I/O	FT_h	-	TIM1_CH3, DFSDM1_CKIN5, SPI4_MISO(boot), SAI4_FS_B, FMC_D10/FMC_AD10, COMP2_OUT, LCD_DE, EVENTOUT	-
G7	44	67	L8	J9	M12	76	PE14	I/O	FT_h	-	TIM1_CH4, SPI4_MOSI(boot), SAI4_MCLK_B, FMC_D11/FMC_AD11, LCD_CLK, EVENTOUT	-

Table 7. STM32H730xB pin and ball descriptions (continued)

Pin Number							Pin name (function after reset)	Pin type	I/O structure	Notes	Alternate functions	Additional functions
TFBGA100	LQFP100	LQFP144	UFBGA144	UFBGA169	UFBGA176+25	LQFP176						
H7	45	68	M8	N9	P14	77	PE15	I/O	FT_h	-	TIM1_BKIN, USART10_CK, FMC_D12/FMC_AD12, TIM1_BKIN_COMP12, LCD_R7, EVENTOUT	-
J7	46	69	M9	L9	N12	78	PB10	I/O	FT_fh	-	TIM2_CH3, LPTIM2_IN1, I2C2_SCL, SPI2_SCK/I2S2_CK, DFSDM1_DATIN7, USART3_TX(boot), OCTOSPIM_P1_NCS, OTG_HS_ULPI_D3, ETH_MII_RX_ER, LCD_G4, EVENTOUT	-
K7	47	70	M10	M9	P10	79	PB11	I/O	FT_f	-	TIM2_CH4, LPTIM2_ETR, I2C2_SDA, DFSDM1_CKIN7, USART3_RX(boot), OTG_HS_ULPI_D4, ETH_MII_TX_EN/ETH_RMII_TX_EN, LCD_G5, EVENTOUT	-
F8	48	71	H7	N10	R13	80	VCAP	S	-	-	-	-
-	49	-	-	-	-	81	VSS	S	-	-	-	-
-	-	-	-	M10	R14	82	VDDLDO	S	-	-	-	-
-	50	72	-	-	-	-	VDD	S	-	-	-	-
-	-	-	-	-	P15	-	PH6	I/O	FT_h	-	TIM12_CH1, I2C2_SMBA, SPI5_SCK, ETH_MII_RXD2, FMC_SDNE1, DCMI_D8/PSSI_D8, EVENTOUT	-
-	-	-	-	-	M11	-	PH7	I/O	FT_fh	-	I2C3_SCL, SPI5_MISO, ETH_MII_RXD3, FMC_SDCKE1, DCMI_D9/PSSI_D9, EVENTOUT	-
-	-	-	-	-	N13	-	PH8	I/O	FT_fh	-	TIM5_ETR, I2C3_SDA, FMC_D16, DCMI_HSYNC/PSSI_DE, LCD_R2, EVENTOUT	-
-	-	-	-	-	M14	-	PH9	I/O	FT_h	-	TIM12_CH2, I2C3_SMBA, FMC_D17, DCMI_D0/PSSI_D0, LCD_R3, EVENTOUT	-

Table 7. STM32H730xB pin and ball descriptions (continued)

Pin Number							Pin name (function after reset)	Pin type	I/O structure	Notes	Alternate functions	Additional functions
TFBGA100	LQFP100	LQFP144	UFBGA144	UFBGA169	UFBGA176+25	LQFP176						
-	-	-	-	K9	N14	-	PH10	I/O	FT_h	-	TIM5_CH1, I2C4_SMBA, FMC_D18, DCMI_D1/PSSI_D1, LCD_R4, EVENTOUT	-
-	-	-	-	L10	M13	-	PH11	I/O	FT_fh	-	TIM5_CH2, I2C4_SCL, FMC_D19, DCMI_D2/PSSI_D2, LCD_R5, EVENTOUT	-
-	-	-	-	-	-	83	VSS	S	-	-	-	-
-	-	-	-	-	-	84	VDD	S	-	-	-	-
-	-	-	-	K10	N15	-	PH12	I/O	FT_fh	-	TIM5_CH3, I2C4_SDA, FMC_D20, DCMI_D3/PSSI_D3, LCD_R6, EVENTOUT	-
K8	51	73	M11	N12	M15	85	PB12	I/O	FT_h	-	TIM1_BKIN, OCTOSPIM_P1_NCLK, I2C2_SMBA, SPI2_NSS/I2S2_WS, DFSDM1_DATIN1, USART3_CK, FDCAN2_RX, OTG_HS_ULPI_D5, ETH_MII_TXD0/ETH_RMII_TXD0, OCTOSPIM_P1_IO0, TIM1_BKIN_COMP12, UART5_RX, EVENTOUT	-
J8	52	74	M12	L11	L15	86	PB13	I/O	FT_h	-	TIM1_CH1N, LPTIM2_OUT, OCTOSPIM_P1_IO2, SPI2_SCK/I2S2_CK, DFSDM1_CKIN1, USART3_CTS/USART3_NSS, FDCAN2_TX, OTG_HS_ULPI_D6, ETH_MII_TXD1/ETH_RMII_TXD1, SDMMC1_D0, DCMI_D2/PSSI_D2, UART5_TX, EVENTOUT	-

Table 7. STM32H730xB pin and ball descriptions (continued)

Pin Number							Pin name (function after reset)	Pin type	I/O structure	Notes	Alternate functions	Additional functions
TFBGA100	LQFP100	LQFP144	UFBGA144	UFBGA169	UFBGA176+25	LQFP176						
H10	53	75	L11	N13	K15	87	PB14	I/O	FT_h	-	TIM1_CH2N, TIM12_CH1, TIM8_CH2N, USART1_TX, SPI2_MISO/I2S2_SDI, DFSDM1_DATIN2, USART3_RTS/USART3_DE, UART4_RTS/UART4_DE, SDMMC2_D0, FMC_D10/FMC_AD10, LCD_CLK, EVENTOUT	-
G10	54	76	L12	M13	K14	88	PB15	I/O	FT_h	-	RTC_REFIN, TIM1_CH3N, TIM12_CH2, TIM8_CH3N, USART1_RX, SPI2_MOSI/I2S2_SDO, DFSDM1_CKIN2, UART4_CTS, SDMMC2_D1, FMC_D11/FMC_AD11, LCD_G7, EVENTOUT	-
K9	55	77	L9	M12	L14	89	PD8	I/O	FT_h	-	DFSDM1_CKIN3, USART3_TX(boot), SPDIFRX1_IN2, FMC_D13/FMC_AD13, EVENTOUT	-
J9	56	78	K9	K11	K13	90	PD9	I/O	FT_h	-	DFSDM1_DATIN3, USART3_RX(boot), FMC_D14/FMC_AD14, EVENTOUT	-
H9	57	79	J9	K12	L13	91	PD10	I/O	FT_h	-	DFSDM1_CKOUT, USART3_CK, FMC_D15/FMC_AD15, LCD_B3, EVENTOUT	-
-	-	-	-	-	-	92	VDD	S	-	-	-	-
-	-	-	-	-	-	93	VSS	S	-	-	-	-
G9	58	80	H9	J10	J13	94	PD11	I/O	FT_h	-	LPTIM2_IN2, I2C4_SMBA, USART3_CTS/USART3_NSS, OCTOSPIM_P1_IO0, SAI4_SD_A, FMC_A16/FMC_CLE, EVENTOUT	-

Table 7. STM32H730xB pin and ball descriptions (continued)

Pin Number							Pin name (function after reset)	Pin type	I/O structure	Notes	Alternate functions	Additional functions
TFBGA100	LQFP100	LQFP144	UFBGA144	UFBGA169	UFBGA176+25	LQFP176						
K10	59	81	L10	K13	J15	95	PD12	I/O	FT_fh	-	LPTIM1_IN1, TIM4_CH1, LPTIM2_IN1, I2C4_SCL, FDCAN3_RX, USART3_RTS/USART3_DE, OCTOSPIM_P1_IO1, SAI4_FS_A, FMC_A17/FMC_ALE, DCMI_D12/PSSI_D12, EVENTOUT	-
J10	60	82	K10	J11	H15	96	PD13	I/O	FT_fh	-	LPTIM1_OUT, TIM4_CH2, I2C4_SDA, FDCAN3_TX, OCTOSPIM_P1_IO3, SAI4_SCK_A, UART9_RTS/UART9_DE, FMC_A18, DCMI_D13/PSSI_D13, EVENTOUT	-
-	-	83	-	-	-	-	VSS	S	-	-	-	-
-	-	84	-	-	-	-	VDD	S	-	-	-	-
H8	61	85	K11	J13	H14	97	PD14	I/O	FT_h	-	TIM4_CH3, UART8_CTS, UART9_RX, FMC_D0/FMC_AD0, EVENTOUT	-
G8	62	86	K12	J12	J12	98	PD15	I/O	FT_h	-	TIM4_CH4, UART8_RTS/UART8_DE, UART9_TX, FMC_D1/FMC_AD1, EVENTOUT	-
-	-	-	-	-	-	99	VDD	S	-	-	-	-
-	-	-	-	-	-	100	VSS	S	-	-	-	-
-	-	-	-	-	-	101	PJ8	I/O	FT	-	TIM1_CH3N, TIM8_CH1, UART8_TX, LCD_G1, EVENTOUT	-
-	-	-	-	-	-	102	PJ9	I/O	FT	-	TIM1_CH3, TIM8_CH1N, UART8_RX, LCD_G2, EVENTOUT	-
-	-	-	-	-	-	103	PJ10	I/O	FT	-	TIM1_CH2N, TIM8_CH2, SPI5_MOSI, LCD_G3, EVENTOUT	-

Table 7. STM32H730xB pin and ball descriptions (continued)

Pin Number							Pin name (function after reset)	Pin type	I/O structure	Notes	Alternate functions	Additional functions
TFBGA100	LQFP100	LQFP144	UFBGA144	UFBGA169	UFBGA176+25	LQFP176						
-	-	-	-	-	-	104	PJ11	I/O	FT	-	TIM1_CH2, TIM8_CH2N, SPI5_MISO, LCD_G4, EVENTOUT	-
-	-	-	-	-	-	105	VDD	S	-	-	-	-
-	-	-	-	-	-	106	VSS	S	-	-	-	-
-	-	-	-	-	-	107	PK0	I/O	FT	-	TIM1_CH1N, TIM8_CH3, SPI5_SCK, LCD_G5, EVENTOUT	-
-	-	-	-	-	-	108	PK1	I/O	FT	-	TIM1_CH1, TIM8_CH3N, SPI5_NSS, LCD_G6, EVENTOUT	-
-	-	-	-	-	-	109	PK2	I/O	FT	-	TIM1_BKIN, TIM8_BKIN, TIM8_BKIN_COMP12, TIM1_BKIN_COMP12, LCD_G7, EVENTOUT	-
-	-	87	J12	H9	G15	110	PG2	I/O	FT_h	-	TIM8_BKIN, TIM8_BKIN_COMP12, FMC_A12, TIM24_ETR, EVENTOUT	-
-	-	88	J11	H10	H13	111	PG3	I/O	FT_h	-	TIM8_BKIN2, TIM8_BKIN2_COMP12, FMC_A13, TIM23_ETR, EVENTOUT	-
-	-	-	-	-	-	112	VSS	S	-	-	-	-
-	-	-	-	-	-	113	VDD	S	-	-	-	-
-	-	89	J10	F8	G14	114	PG4	I/O	FT_h	-	TIM1_BKIN2, TIM1_BKIN2_COMP12, FMC_A14/FMC_BA0, EVENTOUT	-
-	-	90	H12	H11	F15	115	PG5	I/O	FT_h	-	TIM1_ETR, FMC_A15/FMC_BA1, EVENTOUT	-
-	-	91	H11	G9	F14	116	PG6	I/O	FT_h	-	TIM17_BKIN, OCTOSPIM_P1_NCS, FMC_NE3, DCMI_D12/PSSI_D12, LCD_R7, EVENTOUT	-

Table 7. STM32H730xB pin and ball descriptions (continued)

Pin Number							Pin name (function after reset)	Pin type	I/O structure	Notes	Alternate functions	Additional functions
TFBGA100	LQFP100	LQFP144	UFBGA144	UFBGA169	UFBGA176+25	LQFP176						
-	-	92	H10	G10	G13	117	PG7	I/O	FT_h	-	SAI1_MCLK_A, USART6_CK, OCTOSPIM_P2_DQS, FMC_INT, DCMI_D13/PSSI_D13, LCD_CLK, EVENTOUT	-
-	-	93	G11	G11	G12	118	PG8	I/O	FT_h	-	TIM8_ETR, SPI6_NSS/I2S6_WS, USART6_RTS/USART6_DE, SPDIFRX1_IN3, ETH_PPS_OUT, FMC_SDCLK, LCD_G7, EVENTOUT	-
-	-	94	-	-	-	119	VSS	S	-	-	-	-
-	-	-	-	G12	E15	120	VDD50USB	S	-	-	-	-
F6	-	95	C11	G13	F13	121	VDD33USB	S	-	-	-	-
F10	63	96	G12	F9	E14	122	PC6	I/O	FT_h	-	TIM3_CH1, TIM8_CH1, DFSDM1_CKIN3, I2S2_MCK, USART6_TX, SDMMC1_D0DIR, FMC_NWAIT, SDMMC2_D6, SDMMC1_D6, DCMI_D0/PSSI_D0, LCD_HSYNC, EVENTOUT	SWPMI_IO
E10	64	97	F12	F10	D15	123	PC7	I/O	FT_h	-	DBTRGIO, TIM3_CH2, TIM8_CH2, DFSDM1_DATIN3, I2S3_MCK, USART6_RX, SDMMC1_D123DIR, FMC_NE1, SDMMC2_D7, SWPMI_TX, SDMMC1_D7, DCMI_D1/PSSI_D1, LCD_G6, EVENTOUT	-
F9	65	98	F11	F12	D14	124	PC8	I/O	FT_h	-	TRACED1, TIM3_CH3, TIM8_CH3, USART6_CK, UART5_RTS/UART5_DE, FMC_NE2/FMC_NCE, FMC_INT, SWPMI_RX, SDMMC1_D0, DCMI_D2/PSSI_D2, EVENTOUT	-

Table 7. STM32H730xB pin and ball descriptions (continued)

Pin Number							Pin name (function after reset)	Pin type	I/O structure	Notes	Alternate functions	Additional functions
TFBGA100	LQFP100	LQFP144	UFBGA144	UFBGA169	UFBGA176+25	LQFP176						
E9	66	99	E11	F11	E13	125	PC9	I/O	FT_fh	-	MCO2, TIM3_CH4, TIM8_CH4, I2C3_SDA(boot), I2S_CKIN, I2C5_SDA, UART5_CTS, OCTOSPIM_P1_IO0, LCD_G3, SWPMI_SUSPEND, SDMMC1_D1, DCMI_D3/PSSI_D3, LCD_B2, EVENTOUT	-
-	-	-	-	-	-	126	VDD	S	-	-	-	-
D9	67	100	E12	E12	B14	127	PA8	I/O	FT_fh	-	MCO1, TIM1_CH1, TIM8_BKIN2, I2C3_SCL(boot), I2C5_SCL, USART1_CK, OTG_HS_SOF, UART7_RX, TIM8_BKIN2_COMP12, LCD_B3, LCD_R6, EVENTOUT	-
C9	68	101	D12	E11	D13	128	PA9	I/O	FT_u	-	TIM1_CH2, LPUART1_TX, I2C3_SMBA, SPI2_SCK/I2S2_CK, I2C5_SMBA, USART1_TX(boot), ETH_TX_ER, DCMI_D0/PSSI_D0, LCD_R5, EVENTOUT	OTG_HS_VBUS
D10	69	102	D11	E10	C14	129	PA10	I/O	FT_u	-	TIM1_CH3, LPUART1_RX, USART1_RX(boot), OTG_HS_ID, MDIOS_MDIO, LCD_B4, DCMI_D1/PSSI_D1, LCD_B1, EVENTOUT	-
C10	70	103	C12	F13	C15	130	PA11	I/O	FT_u	-	TIM1_CH4, LPUART1_CTS, SPI2_NSS/I2S2_WS, UART4_RX, USART1_CTS/USART1_NSS, FDCAN1_RX, LCD_R4, EVENTOUT	OTG_HS_DM (boot)

Table 7. STM32H730xB pin and ball descriptions (continued)

Pin Number							Pin name (function after reset)	Pin type	I/O structure	Notes	Alternate functions	Additional functions
TFBGA100	LQFP100	LQFP144	UFBGA144	UFBGA169	UFBGA176+25	LQFP176						
B10	71	104	B12	E13	B15	131	PA12	I/O	FT_u	-	TIM1_ETR, LPUART1_RTS/LPUART1_DE, SPI2_SCK/I2S2_CK, UART4_TX, USART1_RTS/USART1_DE, SAI4_FS_B, FDCAN1_TX, TIM1_BKIN2, LCD_R5, EVENTOUT	OTG_HS_DP (boot)
A10	72	105	A12	D11	B13	132	PA13(JTMS/ SWDIO)	I/O	FT	-	JTMS/SWDIO, EVENTOUT	-
E7	73	106	G9	D13	A14	133	VCAP	S	-	-	-	-
-	74	107	-	-	-	134	VSS	S	-	-	-	-
-	-	-	-	D12	A13	135	VDDLDO	S	-	-	-	-
-	75	108	-	-	-	136	VDD	S	-	-	-	-
-	-	-	-	B13	C13	-	PH13	I/O	FT_h	-	TIM8_CH1N, UART4_TX, FDCAN1_TX(boot), FMC_D21, LCD_G2, EVENTOUT	-
-	-	-	-	A13	B12	-	PH14	I/O	FT_h	-	TIM8_CH2N, UART4_RX, FDCAN1_RX(boot), FMC_D22, DCMI_D4/PSSI_D4, LCD_G3, EVENTOUT	-
-	-	-	-	-	D12	-	PH15	I/O	FT_h	-	TIM8_CH3N, FMC_D23, DCMI_D11/PSSI_D11, LCD_G4, EVENTOUT	-
-	-	-	-	-	-	137	VSS	S	-	-	-	-
A9	76	109	A11	B12	A12	138	PA14(JTCK/ SWCLK)	I/O	FT	-	JTCK/SWCLK, EVENTOUT	-
A8	77	110	A10	C11	A11	139	PA15(JTDI)	I/O	FT	-	JTDI, TIM2_CH1/TIM2_ETR, CEC, SPI1_NSS/I2S1_WS, SPI3_NSS(boot)/I2S3_WS, SPI6_NSS/I2S6_WS, UART4_RTS/UART4_DE, LCD_R3, UART7_TX, LCD_B6, EVENTOUT	-

Table 7. STM32H730xB pin and ball descriptions (continued)

Pin Number							Pin name (function after reset)	Pin type	I/O structure	Notes	Alternate functions	Additional functions
TFBGA100	LQFP100	LQFP144	UFBGA144	UFBGA169	UFBGA176+25	LQFP176						
B9	78	111	B11	A12	C12	140	PC10	I/O	FT_fh	-	DFSDM1_CKIN5, I2C5_SDA, SPI3_SCK(boot)/I2S3_CK, USART3_TX, UART4_TX, OCTOSPIM_P1_IO1, LCD_B1, SWPMI_RX, SDMMC1_D2, DCMI_D8/PSSI_D8, LCD_R2, EVENTOUT	-
B8	79	112	B10	B11	C11	141	PC11	I/O	FT_fh	-	DFSDM1_DATIN5, I2C5_SCL, SPI3_MISO(boot)/I2S3_SDI, USART3_RX, UART4_RX, OCTOSPIM_P1_NCS, SDMMC1_D3, DCMI_D4/PSSI_D4, LCD_B4, EVENTOUT	-
C8	80	113	C10	A11	B11	142	PC12	I/O	FT_h	-	TRACED3, FMC_D6/FMC_AD6, TIM15_CH1, I2C5_SMBA, SPI6_SCK/I2S6_CK, SPI3_MOSI(boot)/I2S3_SDO, USART3_CK, UART5_TX, SDMMC1_CK, DCMI_D9/PSSI_D9, LCD_R6, EVENTOUT	-
D8	81	114	E10	D10	C10	143	PD0	I/O	FT_h	-	DFSDM1_CKIN6, UART4_RX, FDCAN1_RX(boot), UART9_CTS, FMC_D2/FMC_AD2, LCD_B1, EVENTOUT	-
E8	82	115	D10	C10	A10	144	PD1	I/O	FT_h	-	DFSDM1_DATIN6, UART4_TX, FDCAN1_TX(boot), FMC_D3/FMC_AD3, EVENTOUT	-
B7	83	116	E9	E9	B10	145	PD2	I/O	FT_h	-	TRACED2, FMC_D7/FMC_AD7, TIM3_ETR, TIM15_BKIN, UART5_RX, LCD_B7, SDMMC1_CMD, DCMI_D11/PSSI_D11, LCD_B2, EVENTOUT	-

Table 7. STM32H730xB pin and ball descriptions (continued)

Pin Number							Pin name (function after reset)	Pin type	I/O structure	Notes	Alternate functions	Additional functions
TFBGA100	LQFP100	LQFP144	UFBGA144	UFBGA169	UFBGA176+25	LQFP176						
C7	84	117	D9	D9	A9	146	PD3	I/O	FT_h	-	DFSDM1_CKOUT, SPI2_SCK/I2S2_CK, USART2_CTS/USART2_NSS, FMC_CLK, DCMI_D5/PSSI_D5, LCD_G7, EVENTOUT	-
D7	85	118	C9	C9	C9	147	PD4	I/O	FT_h	-	USART2_RTS/USART2_DE, OCTOSPIM_P1_IO4, FMC_NOE, EVENTOUT	-
B6	86	119	B9	A9	B9	148	PD5	I/O	FT_h	-	USART2_TX, OCTOSPIM_P1_IO5, FMC_NWE, EVENTOUT	-
-	-	120	-	-	-	-	VSS	S	-	-	-	-
-	-	121	-	-	-	-	VDD	S	-	-	-	-
C6	87	122	A8	B9	D9	149	PD6	I/O	FT_h	-	SAI4_D1, SAI1_D1, DFSDM1_CKIN4, DFSDM1_DATIN1, SPI3_MOSI/I2S3_SDO, SAI1_SD_A, USART2_RX, SAI4_SD_A, OCTOSPIM_P1_IO6, SDMMC2_CK, FMC_NWAIT, DCMI_D10/PSSI_D10, LCD_B2, EVENTOUT	-
D6	88	123	A9	D8	B8	150	PD7	I/O	FT_h	-	DFSDM1_DATIN4, SPI1_MOSI/I2S1_SDO, DFSDM1_CKIN1, USART2_CK, SPDIFRX1_IN1, OCTOSPIM_P1_IO7, SDMMC2_CMD, FMC_NE1, EVENTOUT	-
-	-	-	-	-	-	151	VSS	S	-	-	-	-
-	-	-	-	-	-	152	VDD	S	-	-	-	-
-	-	124	E8	C8	A8	153	PG9	I/O	FT_h	-	FDCAN3_TX, SPI1_MISO/I2S1_SDI, USART6_RX, SPDIFRX1_IN4, OCTOSPIM_P1_IO6, SAI4_FS_B, SDMMC2_D0, FMC_NE2/FMC_NCE, DCMI_VSYNC/PSSI_RDY, EVENTOUT	-

Table 7. STM32H730xB pin and ball descriptions (continued)

Pin Number							Pin name (function after reset)	Pin type	I/O structure	Notes	Alternate functions	Additional functions
TFBGA100	LQFP100	LQFP144	UFBGA144	UFBGA169	UFBGA176+25	LQFP176						
-	-	125	D8	A8	C8	154	PG10	I/O	FT_h	-	FDCAN3_RX, OCTOSPIM_P2_IO6, SPI1_NSS/I2S1_WS, LCD_G3, SAI4_SD_B, SDMMC2_D1, FMC_NE3, DCMI_D2/PSSI_D2, LCD_B2, EVENTOUT	-
-	-	126	C8	B8	A7	155	PG11	I/O	FT_h	-	LPTIM1_IN2, USART10_RX, SPI1_SCK/I2S1_CK, SPDIFRX1_IN1, OCTOSPIM_P2_IO7, SDMMC2_D2, ETH_MII_TX_EN/ETH_RMII_TX_EN, DCMI_D3/PSSI_D3, LCD_B3, EVENTOUT	-
-	-	127	B8	E8	D8	156	PG12	I/O	FT_h	-	LPTIM1_IN1, OCTOSPIM_P2_NCS, USART10_TX, SPI6_MISO/I2S6_SDI, USART6_RTS/USART6_DE, SPDIFRX1_IN2, LCD_B4, SDMMC2_D3, ETH_MII_TXD1/ETH_RMII_TXD1, FMC_NE4, TIM23_CH1, LCD_B1, EVENTOUT	-
-	-	128	D7	D7	B7	157	PG13	I/O	FT_h	-	TRACED0, LPTIM1_OUT, USART10_CTS/USART10_NSS, SPI6_SCK/I2S6_CK, USART6_CTS/USART6_NSS, SDMMC2_D6, ETH_MII_TXD0/ETH_RMII_TXD0, FMC_A24, TIM23_CH2, LCD_R0, EVENTOUT	-
-	-	129	C7	C7	C7	158	PG14	I/O	FT_h	-	TRACED1, LPTIM1_ETR, USART10_RTS/USART10_DE, SPI6_MOSI/I2S6_SDO, USART6_TX, OCTOSPIM_P1_IO7, SDMMC2_D7, ETH_MII_TXD1/ETH_RMII_TXD1, FMC_A25, TIM23_CH3, LCD_B0, EVENTOUT	-
-	-	130	-	-	-	159	VSS	S	-	-	-	-

Table 7. STM32H730xB pin and ball descriptions (continued)

Pin Number							Pin name (function after reset)	Pin type	I/O structure	Notes	Alternate functions	Additional functions
TFBGA100	LQFP100	LQFP144	UFBGA144	UFBGA169	UFBGA176+25	LQFP176						
-	-	131	-	-	-	160	VDD	S	-	-	-	-
-	-	132	B7	E7	D7	161	PG15	I/O	FT_h	-	USART6_CTS/USART6_NSS, OCTOSPIM_P2_DQS, USART10_CK, FMC_NCAS, DCMI_D13/PSSI_D13, EVENTOUT	-
A7	89	133	A7	F7	A6	162	PB3(JTDO/TRACESWO)	I/O	FT_h	-	JTDO/TRACESWO, TIM2_CH2, SPI1_SCK/I2S1_CK, SPI3_SCK/I2S3_CK, SPI6_SCK/I2S6_CK, SDMMC2_D2, CRS_SYNC, UART7_RX, TIM24_ETR, EVENTOUT	-
A6	90	134	A6	B6	B6	163	PB4(NJTRST)	I/O	FT_h	-	NJTRST, TIM16_BKIN, TIM3_CH1, SPI1_MISO/I2S1_SDI, SPI3_MISO/I2S3_SDI, SPI2_NSS/I2S2_WS, SPI6_MISO/I2S6_SDI, SDMMC2_D3, UART7_TX, EVENTOUT	-
C5	91	135	B6	C6	C6	164	PB5	I/O	FT_h	-	TIM17_BKIN, TIM3_CH2, LCD_B5, I2C1_SMBA, SPI1_MOSI/I2S1_SDO, I2C4_SMBA, SPI3_MOSI/I2S3_SDO, SPI6_MOSI/I2S6_SDO, FDCAN2_RX, OTG_HS_ULPI_D7, ETH_PPS_OUT, FMC_SDCKE1, DCMI_D10/PSSI_D10, UART5_RX, EVENTOUT	-
B5	92	136	C6	A5	A5	165	PB6	I/O	FT_fh	-	TIM16_CH1N, TIM4_CH1, I2C1_SCL(boot), CEC, I2C4_SCL, USART1_TX, LPUART1_TX, FDCAN2_TX, OCTOSPIM_P1_NCS, DFSDM1_DATIN5, FMC_SDNE1, DCMI_D5/PSSI_D5, UART5_TX, EVENTOUT	-

Table 7. STM32H730xB pin and ball descriptions (continued)

Pin Number							Pin name (function after reset)	Pin type	I/O structure	Notes	Alternate functions	Additional functions
TFBGA100	LQFP100	LQFP144	UFBGA144	UFBGA169	UFBGA176+25	LQFP176						
A5	93	137	D6	D6	B5	166	PB7	I/O	FT_fa	-	TIM17_CH1N, TIM4_CH2, I2C1_SDA, I2C4_SDA, USART1_RX, LPUART1_RX, DFSDM1_CKIN5, FMC_NL, DCMI_VSYNC/PSSI_RDY, EVENTOUT	PVD_IN
D5	94	138	D5	E6	C5	167	BOOT0	I	B	-	-	VPP
B4	95	139	C5	B5	A2	168	PB8	I/O	FT_fh	-	TIM16_CH1, TIM4_CH3, DFSDM1_CKIN7, I2C1_SCL, I2C4_SCL, SDMMC1_CKIN, UART4_RX, FDCAN1_RX, SDMMC2_D4, ETH_MII_TXD3, SDMMC1_D4, DCMI_D6/PSSI_D6, LCD_B6, EVENTOUT	-
A4	96	140	B5	C5	B3	169	PB9	I/O	FT_fh	-	TIM17_CH1, TIM4_CH4, DFSDM1_DATIN7, I2C1_SDA(boot), SPI2_NSS/I2S2_WS, I2C4_SDA, SDMMC1_CDIR, UART4_TX, FDCAN1_TX, SDMMC2_D5, I2C4_SMBA, SDMMC1_D5, DCMI_D7/PSSI_D7, LCD_B7, EVENTOUT	-
D4	97	141	A5	D5	B4	170	PE0	I/O	FT_h	-	LPTIM1_ETR, TIM4_ETR, LPTIM2_ETR, UART8_RX, SAI4_MCLK_A, FMC_NBL0, DCMI_D2/PSSI_D2, LCD_R0, EVENTOUT	-
C4	98	142	A4	D4	C4	171	PE1	I/O	FT_h	-	LPTIM1_IN2, UART8_TX, FMC_NBL1, DCMI_D3/PSSI_D3, LCD_R6, EVENTOUT	-
-	-	-	-	A4	A4	172	VCAP	S	-	-	-	-
-	99	-	-	-	-	173	VSS	S	-	-	-	-
F7	-	143	E5	C4	D4	174	PDR_ON	S	-	-	-	-
-	-	-	-	B4	A3	175	VDDLDO	S	-	-	-	-
-	100	144	-	-	-	-	VDD	S	-	-	-	-

Table 7. STM32H730xB pin and ball descriptions (continued)

Pin Number							Pin name (function after reset)	Pin type	I/O structure	Notes	Alternate functions	Additional functions
TFBGA100	LQFP100	LQFP144	UFBGA144	UFBGA169	UFBGA176+25	LQFP176						
-	-	-	-	-	-	176	VDD	S	-	-	-	-
C2	-	-	D2	B3	A1	-	VSS	S	-	-	-	-
E6	-	-	E6	B7	A15	-	VSS	S	-	-	-	-
J1	-	-	E7	B10	C2	-	VSS	S	-	-	-	-
E4	-	-	G4	C12	D10	-	VSS	S	-	-	-	-
E5	-	-	G8	D2	D6	-	VSS	S	-	-	-	-
-	-	-	G10	G2	E1	-	VSS	S	-	-	-	-
-	-	-	H5	H12	F10	-	VSS	S	-	-	-	-
-	-	-	H6	L12	F12	-	VSS	S	-	-	-	-
-	-	-	-	M2	F6	-	VSS	S	-	-	-	-
-	-	-	-	M4	F7	-	VSS	S	-	-	-	-
-	-	-	-	M7	F8	-	VSS	S	-	-	-	-
-	-	-	-	M11	F9	-	VSS	S	-	-	-	-
-	-	-	-	-	G10	-	VSS	S	-	-	-	-
-	-	-	-	-	G6	-	VSS	S	-	-	-	-
-	-	-	-	-	G7	-	VSS	S	-	-	-	-
-	-	-	-	-	G8	-	VSS	S	-	-	-	-
-	-	-	-	-	G9	-	VSS	S	-	-	-	-
-	-	-	-	-	H10	-	VSS	S	-	-	-	-
-	-	-	-	-	H6	-	VSS	S	-	-	-	-
-	-	-	-	-	H7	-	VSS	S	-	-	-	-
-	-	-	-	-	H8	-	VSS	S	-	-	-	-
-	-	-	-	-	H9	-	VSS	S	-	-	-	-
-	-	-	-	-	J10	-	VSS	S	-	-	-	-
-	-	-	-	-	J14	-	VSS	S	-	-	-	-
-	-	-	-	-	J6	-	VSS	S	-	-	-	-
-	-	-	-	-	J7	-	VSS	S	-	-	-	-
-	-	-	-	-	J8	-	VSS	S	-	-	-	-
-	-	-	-	-	J9	-	VSS	S	-	-	-	-
-	-	-	-	-	K10	-	VSS	S	-	-	-	-

Table 7. STM32H730xB pin and ball descriptions (continued)

Pin Number							Pin name (function after reset)	Pin type	I/O structure	Notes	Alternate functions	Additional functions
TFBGA100	LQFP100	LQFP144	UFBGA144	UFBGA169	UFBGA176+25	LQFP176						
-	-	-	-	-	K12	-	VSS	S	-	-	-	-
-	-	-	-	-	K2	-	VSS	S	-	-	-	-
-	-	-	-	-	K6	-	VSS	S	-	-	-	-
-	-	-	-	-	K7	-	VSS	S	-	-	-	-
-	-	-	-	-	K8	-	VSS	S	-	-	-	-
-	-	-	-	-	K9	-	VSS	S	-	-	-	-
-	-	-	-	-	M10	-	VSS	S	-	-	-	-
-	-	-	-	-	M6	-	VSS	S	-	-	-	-
-	-	-	-	-	R1	-	VSS	S	-	-	-	-
-	-	-	-	-	R15	-	VSS	S	-	-	-	-
D2	-	-	D3	A3	D5	-	VDD	S	-	-	-	-
F5	-	-	F4	A6	D11	-	VDD	S	-	-	-	-
K1	-	-	F5	A7	E4	-	VDD	S	-	-	-	-
F4	-	-	F6	A10	E12	-	VDD	S	-	-	-	-
-	-	-	F7	C13	G4	-	VDD	S	-	-	-	-
-	-	-	F8	D1	H12	-	VDD	S	-	-	-	-
-	-	-	F9	G1	K4	-	VDD	S	-	-	-	-
-	-	-	F10	H13	L12	-	VDD	S	-	-	-	-
-	-	-	G5	L13	M5	-	VDD	S	-	-	-	-
-	-	-	G6	M1	M9	-	VDD	S	-	-	-	-
-	-	-	G7	N4	-	-	VDD	S	-	-	-	-
-	-	-	-	N7	-	-	VDD	S	-	-	-	-
-	-	-	-	N11	-	-	VDD	S	-	-	-	-

1. Pxy_C and Pxy pins/balls are two separate pads (analog switch open). The analog switch is configured through a SYSCFG register. Refer to the product reference manual for a detailed description of the switch configuration bits.
2. There is a direct path between Pxy_C and Pxy pins/balls, through an analog switch. Pxy alternate functions are available on Pxy_C when the analog switch is closed. The analog switch is configured through a SYSCFG register. Refer to the product reference manual for a detailed description of the switch configuration bits.
3. Pxy_C pins have specific electrical limitations described in *Section 6: Electrical characteristics*.

Table 8. STM32H730xB pin alternate functions

Port		AF0	AF1	AF2	AF3	AF4	AF5	AF6	AF7	AF8	AF9	AF10	AF11	AF12	AF13	AF14	AF15
		SYS	FMC/ LPTIM1/ SAI4/ TIM16/17 /TIM1x/ TIM2x	FDCAN3 /PDM_ SAI1/ TIM3/4/5 /12/15	DFSDM1/ LCD/ LPTIM2/3/ 4/5/ LPUART1 /OCTO SPIM_P1/ 2/TIM8	CEC/DCMI/ PSSI/ DFSDM1/ I2C1/2/3/4/5 /LPTIM2/ OCTOSPIM _P1/TIM15/ USART1/10	CEC/ FDCAN3/ SPI1/I2S1/ SPI2/I2S2/ SPI3/I2S3/ SPI4/5/6	DFSDM1/ I2C4/5/ OCTO SPIM_P1/ SAI1/SPI3/ I2S3/ UART4	SDMMC1/ SPI2/I2S2 /SPI3/I2S 3/SPI6/ UART7 /USART1/ 2/3/6	LPUART1 /SAI4/ SDMMC1/ SPDIFRX 1/SPI6/ UART4/5/ 8	FDCAN1/2/ FMC/LCD/ OCTOSPIM _P1/2/SAI4 /SDMMC2/ SPDIFRX1/ TIM13/14	CRS/FMC/ LCD/OCT OSPIM_P1 /OTG1_FS/ OTG1_HS/ SAI4/ SDMMC2/ TIM8	DFSDM1/ ETH/I2C4/ LCD/MDIOS /OCTOSPIM _P1/SDMMC 2/SWPMI1/ TIM1x/TIM8/ UART7/9/ USART10	FMC/LCD /MDIOS/ OCTOSPI M_P1/ SDMMC1 /TIM1x/ TIM8	COMP/ DCMI/ PSSI/ LCD/ TIM1x/ TIM23	LCD/ TIM24/ UART5	SYS
Port A	PA0	-	TIM2_ CH1/TIM 2_ETR	TIM5_ CH1	TIM8_ ETR	TIM15_ BKIN	SPI6_NSS /I2S6_WS	-	USART2_ CTS/ USART2_ NSS	UART4_ TX	SDMMC2_ CMD	SAI4_SD_ B	ETH_MII_ CRS	FMC_A19	-	-	EVENT OUT
	PA1	-	TIM2_CH 2	TIM5_ CH2	LPTIM3_ OUT	TIM15_CH1 N	-	-	USART2_ RTS/ USART2_ DE	UART4_ RX	OCTOSPIM _P1_IO3	SAI4_ MCLK_B	ETH_MII_ RX_CLK/ ETH_RMII_ REF_CLK	OCTOSPI M_P1_ DQS	-	LCD_R 2	EVENT OUT
	PA2	-	TIM2_CH 3	TIM5_ CH3	LPTIM4_ OUT	TIM15_CH1	-	OCTOSPI M_P1_IO0	USART2_ TX	SAI4_ SCK_B	-	-	ETH_MDIO	MDIOS_ MDIO	-	LCD_R 1	EVENT OUT
	PA3	-	TIM2_CH 4	TIM5_ CH4	LPTIM5_ OUT	TIM15_CH2	I2S6_MCK	OCTOSPI M_P1_IO2	USART2_ RX	-	LCD_B2	OTG_HS_ ULPI_D0	ETH_MII_ COL	OCTOSPI M_P1_ CLK	-	LCD_B 5	EVENT OUT
	PA4	D1PW REN	-	TIM5_ ETR	-	-	SPI1_NSS /I2S1_WS	SPI3_NSS/ I2S3_WS	USART2_ CK	SPI6_NS S/I2S6_ WS	-	-	-	FMC_D8/ FMC_AD 8	DCMI_ HSYNC /PSSI_ DE	LCD_V SYNC	EVENT OUT
	PA5	D2PW REN	TIM2_CH 1/TIM2_ ETR	-	TIM8_ CH1N	-	SPI1_SCK /I2S1_CK	-	-	SPI6_SC K/I2S6_ CK	-	OTG_HS_ ULPI_CK	-	FMC_D9/ FMC_AD 9	PSSI_ D14	LCD_R 4	EVENT OUT
	PA6	-	TIM1_ BKIN	TIM3_C H1	TIM8_ BKIN	-	SPI1_ MISO/I2S 1_SDI	OCTOSPI M_P1_IO3	-	SPI6_MIS O/I2S6_S DI	TIM13_CH 1	TIM8_BKIN _COMP12	MDIOS_ MDC	TIM1_ BKIN_ COMP12	DCMI_ PIXCL K/PSSI _PDCK	LCD_G 2	EVENT OUT
	PA7	-	TIM1_CH 1N	TIM3_ CH2	TIM8_CH 1N	-	SPI1_ MOSI/I2S 1_SDO	-	-	SPI6_ MOSI/I2S 6_SDO	TIM14_CH 1	OCTOSPI M_P1_IO2	ETH_MII_ RX_DV/ETH _RMII_CRS _DV	FMC_SD NWE	-	LCD_V SYNC	EVENT OUT
	PA8	MCO1	TIM1_CH 1	-	TIM8_ BKIN2	I2C3_SCL	-	I2C5_SCL	USART1_ CK	-	-	OTG_HS_ SOF	UART7_RX	TIM8_ BKIN2_ COMP12	LCD_B 3	LCD_R 6	EVENT OUT

Table 8. STM32H730xB pin alternate functions (continued)

Port		AF0	AF1	AF2	AF3	AF4	AF5	AF6	AF7	AF8	AF9	AF10	AF11	AF12	AF13	AF14	AF15
		SYS	FMC/ LPTIM1/ SAI4/ TIM16/17 /TIM1x/ TIM2x	FDCAN3 /PDM_ SAI1/ TIM3/4/5 /12/15	DFSDM1/ LCD/ LPTIM2/3/ 4/5/ LPUART1 /OCTO SPIM_P1/ 2/TIM8	CEC/DCMI/ PSSI/ DFSDM1/ I2C1/2/3/4/5 /LPTIM2/ OCTOSPIM _P1/TIM15/ USART1/10	CEC/ FDCAN3/ SPI1/I2S1/ SPI2/I2S2/ SPI3/I2S3/ SPI4/5/6	DFSDM1/ I2C4/5/ OCTO SPIM_P1/ SAI1/SPI3/ I2S3/ UART4	SDMMC1/ SPI2/I2S2 /SPI3/I2S 3/SPI6/ UART7 /USART1/ 2/3/6	LPUART1 /SAI4/ SDMMC1/ SPDIFRX 1/SPI6/ UART4/5/ 8	FDCAN1/2/ FMC/LCD/ OCTOSPIM _P1/2/SAI4 /SDMMC2/ SPDIFRX1/ TIM13/14	CRS/FMC/ LCD/OCT OSPIM_P1 /OTG1_FS/ OTG1_HS/ SAI4/ SDMMC2/ TIM8	DFSDM1/ ETH/I2C4/ LCD/MDIOS /OCTOSPIM _P1/SDMMC 2/SWPMI1/ TIM1x/TIM8/ UART7/9/ USART10	FMC/LCD /MDIOS/ OCTOSPI M_P1/ SDMMC1 /TIM1x/ TIM8	COMP/ DCMI/ PSSI/ LCD/ TIM1x/ TIM23	LCD/ TIM24/ UART5	SYS
Port A	PA9	-	TIM1_CH 2	-	LPUART1 _TX	I2C3_ SMBA	SPI2_SCK /I2S2_CK	I2C5_ SMBA	USART1_ TX	-	-	-	ETH_TX_ER	-	DCMI_ D0/ PSSI_ D0	LCD_R 5	EVENT OUT
	PA10	-	TIM1_CH 3	-	LPUART1 _RX	-	-	-	USART1_ RX	-	-	OTG_HS_ ID	MDIOS_ MDIO	LCD_B4	DCMI_ D1/ PSSI_ D1	LCD_B 1	EVENT OUT
	PA11	-	TIM1_CH 4	-	LPUART1 _CTS	-	SPI2_NSS /I2S2_WS	UART4_RX	USART1_ CTS/ USART1_ NSS	-	FDCAN1_ RX	-	-	-	-	LCD_R 4	EVENT OUT
	PA12	-	TIM1_ ETR	-	LPUART1 _RTS/ LPUART1 _DE	-	SPI2_SCK /I2S2_CK	UART4_TX	USART1_ RTS/ USART1_ DE	SAI4_FS_ B	FDCAN1_ TX	-	-	TIM1_ BKIN2	-	LCD_R 5	EVENT OUT
	PA13	JTMS/ SWDI O	-	-	-	-	-	-	-	-	-	-	-	-	-	-	EVENT OUT
	PA14	JTCK/ SWCL K	-	-	-	-	-	-	-	-	-	-	-	-	-	-	EVENT OUT
	PA15	JTDI	TIM2_CH 1/TIM2_ ETR	-	-	CEC	SPI1_NSS /I2S1_WS	SPI3_NSS/ I2S3_WS	SPI6_NS S/I2S6_W S	UART4_R TS/UART 4_DE	LCD_R3	-	UART7_TX	-	-	LCD_B 6	EVENT OUT

Table 8. STM32H730xB pin alternate functions (continued)

Port		AF0	AF1	AF2	AF3	AF4	AF5	AF6	AF7	AF8	AF9	AF10	AF11	AF12	AF13	AF14	AF15
		SYS	FMC/ LPTIM1/ SAI4/ TIM16/17 /TIM1x/ TIM2x	FDCAN3 /PDM_ SAI1/ TIM3/4/5 /12/15	DFSDM1/ LCD/ LPTIM2/3/ 4/5/ LPUART1 /OCTO SPIM_P1/ 2/TIM8	CEC/DCMI/ PSSI/ DFSDM1/ I2C1/2/3/4/5 /LPTIM2/ OCTOSPIM _P1/TIM15/ USART1/10	CEC/ FDCAN3/ SPI1/I2S1/ SPI2/I2S2/ SPI3/I2S3/ SPI4/5/6	DFSDM1/ I2C4/5/ OCTO SPIM_P1/ SAI1/SPI3/ I2S3/ UART4	SDMMC1/ SPI2/I2S2 /SPI3/I2S 3/SPI6/ UART7 /USART1/ 2/3/6	LPUART1 /SAI4/ SDMMC1/ SPDIFRX 1/SPI6/ UART4/5/ 8	FDCAN1/2/ FMC/LCD/ OCTOSPIM _P1/2/SAI4 /SDMMC2/ SPDIFRX1/ TIM13/14	CRS/FMC/ LCD/OCT OSPIM_P1 /OTG1_FS/ OTG1_HS/ SAI4/ SDMMC2/ TIM8	DFSDM1/ ETH/I2C4/ LCD/MDIOS /OCTOSPIM _P1/SDMMC 2/SWPMI1/ TIM1x/TIM8/ UART7/9/ USART10	FMC/LCD /MDIOS/ OCTOSPI M_P1/ SDMMC1 /TIM1x/ TIM8	COMP/ DCMI/ PSSI/ LCD/ TIM1x/ TIM23	LCD/ TIM24/ UART5	SYS
Port B	PB0	-	TIM1_ CH2N	TIM3_ CH3	TIM8_ CH2N	OCTOSPIM _P1_IO1	-	DFSDM1_ CKOUT	-	UART4_ CTS	LCD_R3	OTG_HS_ ULPI_D1	ETH_MII_ RXD2	-	-	LCD_G 1	EVENT OUT
	PB1	-	TIM1_ CH3N	TIM3_ CH4	TIM8_CH 3N	OCTOSPIM _P1_IO0	-	DFSDM1_ DATIN1	-	-	LCD_R6	OTG_HS_ ULPI_D2	ETH_MII_ RXD3	-	-	LCD_G 0	EVENT OUT
	PB2	RTC_ OUT	SAI4_D1	SAI1_D1	-	DFSDM1_ CKIN1	-	SAI1_SD_ A	SPI3_ MOSI/I2S 3_SDO	SAI4_SD_ A	OCTOSPIM _P1_CLK	OCTOSPI M_P1_ DQS	ETH_TX_ER	-	TIM23_ ETR	-	EVENT OUT
	PB3	JTDO/ TRAC ESWO	TIM2_CH 2	-	-	-	SPI1_SCK /I2S1_CK	SPI3_SCK/ I2S3_CK	-	SPI6_ SCK/I2S6 _CK	SDMMC2_ D2	CRS_ SYNC	UART7_RX	-	-	TIM24_ ETR	EVENT OUT
	PB4	NJT RST	TIM16_ BKIN	TIM3_ CH1	-	-	SPI1_ MISO/I2S 1_SDI	SPI3_ MISO/I2S3 _SDI	SPI2_ NSS/I2S2 _WS	SPI6_ MISO/I2S 6_SDI	SDMMC2_ D3	-	UART7_TX	-	-	-	EVENT OUT
	PB5	-	TIM17_ BKIN	TIM3_ CH2	LCD_B5	I2C1_ SMBA	SPI1_ MOSI/I2S 1_SDO	I2C4_SMB A	SPI3_ MOSI/I2S 3_SDO	SPI6_ MOSI/I2S 6_SDO	FDCAN2_ RX	OTG_HS_ ULPI_D7	ETH_PPS_ OUT	FMC_SD CKE1	DCMI_ D10/ PSSI_ D10	UART5 _RX	EVENT OUT
	PB6	-	TIM16_ CH1N	TIM4_ CH1	-	I2C1_SCL	CEC	I2C4_SCL	USART1_ TX	LPUART1 _TX	FDCAN2_ TX	OCTOSPI M_P1_ NCS	DFSDM1_ DATIN5	FMC_SD NE1	DCMI_ D5/ PSSI_ D5	UART5 _TX	EVENT OUT
	PB7	-	TIM17_ CH1N	TIM4_ CH2	-	I2C1_SDA	-	I2C4_SDA	USART1_ RX	LPUART1 _RX	-	-	DFSDM1_ CKIN5	FMC_NL	DCMI_ VSYNC /PSSI_ RDY	-	EVENT OUT
	PB8	-	TIM16_ CH1	TIM4_ CH3	DFSDM1_ CKIN7	I2C1_SCL	-	I2C4_SCL	SDMMC1 _CKIN	UART4_ RX	FDCAN1_ RX	SDMMC2_ D4	ETH_MII_ TXD3	SDMMC1 _D4	DCMI_ D6/ PSSI_ D6	LCD_B 6	EVENT OUT
	PB9	-	TIM17_ CH1	TIM4_ CH4	DFSDM1_ DATIN7	I2C1_SDA	SPI2_NSS /I2S2_WS	I2C4_SDA	SDMMC1 _CDIR	UART4_ TX	FDCAN1_ TX	SDMMC2_ D5	I2C4_SMBA	SDMMC1 _D5	DCMI_ D7/ PSSI_ D7	LCD_B 7	EVENT OUT

Table 8. STM32H730xB pin alternate functions (continued)

Port		AF0	AF1	AF2	AF3	AF4	AF5	AF6	AF7	AF8	AF9	AF10	AF11	AF12	AF13	AF14	AF15
		SYS	FMC/ LPTIM1/ SAI4/ TIM16/17 /TIM1x/ TIM2x	FDCAN3 /PDM_ SAI1/ TIM3/4/5 /12/15	DFSDM1/ LCD/ LPTIM2/3/ 4/5/ LPUART1 /OCTO SPIM_P1/ 2/TIM8	CEC/DCMI/ PSSI/ DFSDM1/ I2C1/2/3/4/5 /LPTIM2/ OCTOSPIM _P1/TIM15/ USART1/10	CEC/ FDCAN3/ SPI1/I2S1/ SPI2/I2S2/ SPI3/I2S3/ SPI4/5/6	DFSDM1/ I2C4/5/ OCTO SPIM_P1/ SAI1/SPI3/ I2S3/ UART4	SDMMC1/ SPI2/I2S2 /SPI3/I2S 3/SPI6/ UART7 /USART1/ 2/3/6	LPUART1 /SAI4/ SDMMC1/ SPDIFRX 1/SPI6/ UART4/5/ 8	FDCAN1/2/ FMC/LCD/ OCTOSPIM _P1/2/SAI4 /SDMMC2/ SPDIFRX1/ TIM13/14	CRS/FMC/ LCD/OCT OSPIM_P1 /OTG1_FS/ OTG1_HS/ SAI4/ SDMMC2/ TIM8	DFSDM1/ ETH/I2C4/ LCD/MDIOS /OCTOSPIM _P1/SDMMC 2/SWPMI1/ TIM1x/TIM8/ UART7/9/ USART10	FMC/LCD /MDIOS/ OCTOSPI M_P1/ SDMMC1 /TIM1x/ TIM8	COMP/ DCMI/ PSSI/ LCD/ TIM1x/ TIM23	LCD/ TIM24/ UART5	SYS
Port B	PB10	-	TIM2_ CH3	-	LPTIM2_ IN1	I2C2_SCL	SPI2_SCK /I2S2_CK	DFSDM1_ DATIN7	USART3_ TX	-	OCTOSPIM _P1_NCS	OTG_HS_ ULPI_D3	ETH_MII_ RX_ER	-	-	LCD_G 4	EVENT OUT
	PB11	-	TIM2_ CH4	-	LPTIM2_ ETR	I2C2_SDA	-	DFSDM1_ CKIN7	USART3_ RX	-	-	OTG_HS_ ULPI_D4	ETH_MII_TX _EN/ETH_ RMII_TX_ EN	-	-	LCD_G 5	EVENT OUT
	PB12	-	TIM1_ BKIN	-	OCTOSPI M_P1_ NCLK	I2C2_ SMBA	SPI2_NSS /I2S2_WS	DFSDM1_ DATIN1	USART3_ CK	-	FDCAN2_ RX	OTG_HS_ ULPI_D5	ETH_MII_TX D0/ETH_ RMII_TXD0	OCTOSPI M_P1_IO 0	TIM1_ BKIN_ COMP 12	UART5 _RX	EVENT OUT
	PB13	-	TIM1_ CH1N	-	LPTIM2_ OUT	OCTOSPIM _P1_IO2	SPI2_SCK /I2S2_CK	DFSDM1_ CKIN1	USART3_ CTS/ USART3_ NSS	-	FDCAN2_ TX	OTG_HS_ ULPI_D6	ETH_MII_TX D1/ETH_ RMII_TXD1	SDMMC1 _D0	DCMI_ D2/P SSI_D2	UART5 _TX	EVENT OUT
	PB14	-	TIM1_ CH2N	TIM12_ CH1	TIM8_ CH2N	USART1_ TX	SPI2_ MISO/ I2S2_SDI	DFSDM1_ DATIN2	USART3_ RTS/ USART3_ DE	UART4_ RTS /UART4_ DE	SDMMC2_ D0	-	-	FMC_D1 0/FMC_ AD10	-	LCD_ CLK	EVENT OUT
	PB15	RTC_ REFIN	TIM1_ CH3N	TIM12_ CH2	TIM8_ CH3N	USART1_ RX	SPI2_MO SI/I2S2_ SDO	DFSDM1_ CKIN2	-	UART4_ CTS	SDMMC2_ D1	-	-	FMC_D11 /FMC_AD 11	-	LCD_G 7	EVENT OUT

Table 8. STM32H730xB pin alternate functions (continued)

Port		AF0	AF1	AF2	AF3	AF4	AF5	AF6	AF7	AF8	AF9	AF10	AF11	AF12	AF13	AF14	AF15
		SYS	FMC/ LPTIM1/ SAI4/ TIM16/17 /TIM1x/ TIM2x	FDCAN3 /PDM_ SAI1/ TIM3/4/5 /12/15	DFSDM1/ LCD/ LPTIM2/3/ 4/5/ LPUART1 /OCTO SPIM_P1/ 2/TIM8	CEC/DCMI/ PSSI/ DFSDM1/ I2C1/2/3/4/5 /LPTIM2/ OCTOSPIM _P1/TIM15/ USART1/10	CEC/ FDCAN3/ SPI1/I2S1/ SPI2/I2S2/ SPI3/I2S3/ SPI4/5/6	DFSDM1/ I2C4/5/ OCTO SPIM_P1/ SAI1/SPI3/ I2S3/ UART4	SDMMC1/ SPI2/I2S2 /SPI3/I2S 3/SPI6/ UART7 /USART1/ 2/3/6	LPUART1 /SAI4/ SDMMC1/ SPDIFRX 1/SPI6/ UART4/5/ 8	FDCAN1/2/ FMC/LCD/ OCTOSPIM _P1/2/SAI4 /SDMMC2/ SPDIFRX1/ TIM13/14	CRS/FMC/ LCD/OCT OSPIM_P1 /OTG1_FS/ OTG1_HS/ SAI4/ SDMMC2/ TIM8	DFSDM1/ ETH/I2C4/ LCD/MDIOS /OCTOSPIM _P1/SDMMC 2/SWPMI1/ TIM1x/TIM8/ UART7/9/ USART10	FMC/LCD /MDIOS/ OCTOSPI M_P1/ SDMMC1 /TIM1x/ TIM8	COMP/ DCMI/ PSSI/ LCD/ TIM1x/ TIM23	LCD/ TIM24/ UART5	SYS
Port C	PC0	-	FMC_D1 2/FMC_ AD12	-	DFSDM1_ CKIN0	-	-	DFSDM1_ DATIN4	-	SAI4_FS_ B	FMC_A25	OTG_HS_ ULPI_STP	LCD_G2	FMC_ SDNWE	-	LCD_R 5	EVENT OUT
	PC1	TRA CED0	SAI4_D1	-	DFSDM1_ DATIN0	DFSDM1_C KIN4	SPI2_MO SI/I2S2_S DO	SAI1_SD_ A	-	SAI4_SD_ A	SDMMC2_ CK	OCTOSPI M_P1_IO4	ETH_MDC	MDIOS_ MDC	-	LCD_G 5	EVENT OUT
	PC2	PWR_ DEEP SLEEP	-	-	DFSDM1_ CKIN1	OCTOSPIM _P1_IO5	SPI2_MIS O/I2S2_S DI	DFSDM1_ CKOUT	-	-	OCTOSPIM _P1_IO2	OTG_HS_ ULPI_DIR	ETH_MII_ TXD2	FMC_SD NE0	-	-	EVENT OUT
	PC3	PWR_ SLEEP	-	-	DFSDM1_ DATIN1	OCTOSPIM _P1_IO6	SPI2_MO SI/I2S2_S DO	-	-	-	OCTOSPIM _P1_IO0	OTG_HS_ ULPI_NXT	ETH_MII_ TX_CLK	FMC_SD CKE0	-	-	EVENT OUT
	PC4	PWR_ DEEP SLEEP	FMC_A2 2	-	DFSDM1_ CKIN2	-	I2S1_MCK	-	-	-	SPDIFRX1 _IN3	SDMMC2_ CKIN	ETH_MII_ RXD0/ETH_ RMII_RXD0	FMC_SD NE0	-	LCD_R 7	EVENT OUT
	PC5	PWR_ SLEEP	SAI4_D3	SAI1_D3	DFSDM1_ DATIN2	PSSI_D15	-	-	-	-	SPDIFRX1 _IN4	OCTOSPI M_P1_ DQS	ETH_MII_ RXD1/ETH_ RMII_RXD1	FMC_SD CKE0	COMP 1_OUT	LCD_ DE	EVENT OUT
	PC6	-	-	TIM3_ CH1	TIM8_CH 1	DFSDM1_ CKIN3	I2S2_MCK	-	USART6_ TX	SDMMC1 _D0DIR	FMC_ NWAIT	SDMMC2_ D6	-	SDMMC1 _D6	DCMI_ D0/ PSSI_ D0	LCD_ HSYNC	EVENT OUT
	PC7	DBTR GIO	-	TIM3_ CH2	TIM8_CH 2	DFSDM1_ DATIN3	-	I2S3_MCK	USART6_ RX	SDMMC1 _D123DIR	FMC_NE1	SDMMC2_ D7	SWPMI_TX	SDMMC1 _D7	DCMI_ D1/PS SI_D1	LCD_G 6	EVENT OUT
	PC8	TRA CED1	-	TIM3_ CH3	TIM8_CH 3	-	-	-	USART6_ CK	UART5_ RTS/ UART5_ DE	FMC_NE2/ FMC_NCE	FMC_INT	SWPMI_RX	SDMMC1 _D0	DCMI_ D2/PS SI_D2	-	EVENT OUT
	PC9	MCO2	-	TIM3_C H4	TIM8_CH 4	I2C3_SDA	I2S_CKIN	I2C5_SDA	-	UART5_ CTS	OCTOSPIM _P1_IO0	LCD_G3	SWPMI_SU SPEND	SDMMC1 _D1	DCMI_ D3/PS SI_D3	LCD_B 2	EVENT OUT

Table 8. STM32H730xB pin alternate functions (continued)

Port		AF0	AF1	AF2	AF3	AF4	AF5	AF6	AF7	AF8	AF9	AF10	AF11	AF12	AF13	AF14	AF15
		SYS	FMC/ LPTIM1/ SAI4/ TIM16/17 /TIM1x/ TIM2x	FDCAN3 /PDM_ SAI1/ TIM3/4/5 /12/15	DFSDM1/ LCD/ LPTIM2/3/ 4/5/ LPUART1 /OCTO SPIM_P1/ 2/TIM8	CEC/DCMI/ PSSI/ DFSDM1/ I2C1/2/3/4/5 /LPTIM2/ OCTOSPIM _P1/TIM15/ USART1/10	CEC/ FDCAN3/ SPI1/I2S1/ SPI2/I2S2/ SPI3/I2S3/ SPI4/5/6	DFSDM1/ I2C4/5/ OCTO SPIM_P1/ SAI1/SPI3/ I2S3/ UART4	SDMMC1/ SPI2/I2S2 /SPI3/I2S 3/SPI6/ UART7 /USART1/ 2/3/6	LPUART1 /SAI4/ SDMMC1/ SPDIFRX 1/SPI6/ UART4/5/ 8	FDCAN1/2/ FMC/LCD/ OCTOSPIM _P1/2/SAI4 /SDMMC2/ SPDIFRX1/ TIM13/14	CRS/FMC/ LCD/OCT OSPIM_P1 /OTG1_FS/ OTG1_HS/ SAI4/ SDMMC2/ TIM8	DFSDM1/ ETH/I2C4/ LCD/MDIOS /OCTOSPIM _P1/SDMMC 2/SWPMI1/ TIM1x/TIM8/ UART7/9/ USART10	FMC/LCD /MDIOS/ OCTOSPI M_P1/ SDMMC1 /TIM1x/ TIM8	COMP/ DCMI/ PSSI/ LCD/ TIM1x/ TIM23	LCD/ TIM24/ UART5	SYS
Port C	PC10	-	-	-	DFSDM1_ CKIN5	I2C5_SDA	-	SPI3_SCK/ I2S3_CK	USART3_ TX	UART4_ TX	OCTOSPIM _P1_IO1	LCD_B1	SWPMI_RX	SDMMC1 _D2	DCMI_ D8/ PSSI_ D8	LCD_R 2	EVENT OUT
	PC11	-	-	-	DFSDM1_ DATIN5	I2C5_SCL	-	SPI3_ MISO/I2S3 _SDI	USART3_ RX	UART4_ RX	OCTOSPIM _P1_NCS	-	-	SDMMC1 _D3	DCMI_ D4/ PSSI_ D4	LCD_B 4	EVENT OUT
	PC12	TRAC ED3	FMC_D6/ FMC_AD 6	TIM15_ CH1	-	I2C5_SMB A	SPI6_SCK /I2S6_CK	SPI3_ MOSI/I2S3 _SDO	USART3_ CK	UART5_ TX	-	-	-	SDMMC1 _CK	DCMI_ D9/ PSSI_ D9	LCD_R 6	EVENT OUT
	PC13	-	-	-	-	-	-	-	-	-	-	-	-	-	-	-	EVENT OUT
	PC14	-	-	-	-	-	-	-	-	-	-	-	-	-	-	-	EVENT OUT
	PC15	-	-	-	-	-	-	-	-	-	-	-	-	-	-	-	EVENT OUT

Table 8. STM32H730xB pin alternate functions (continued)

Port		AF0	AF1	AF2	AF3	AF4	AF5	AF6	AF7	AF8	AF9	AF10	AF11	AF12	AF13	AF14	AF15
		SYS	FMC/ LPTIM1/ SAI4/ TIM16/17 /TIM1x/ TIM2x	FDCAN3 /PDM_ SAI1/ TIM3/4/5 /12/15	DFSDM1/ LCD/ LPTIM2/3/ 4/5/ LPUART1 /OCTO SPIM_P1/ 2/TIM8	CEC/DCMI/ PSSI/ DFSDM1/ I2C1/2/3/4/5 /LPTIM2/ OCTOSPIM _P1/TIM15/ USART1/10	CEC/ FDCAN3/ SPI1/I2S1/ SPI2/I2S2/ SPI3/I2S3/ SPI4/5/6	DFSDM1/ I2C4/5/ OCTO SPIM_P1/ SAI1/SPI3/ I2S3/ UART4	SDMMC1/ SPI2/I2S2 /SPI3/I2S 3/SPI6/ UART7 /USART1/ 2/3/6	LPUART1 /SAI4/ SDMMC1/ SPDIFRX 1/SPI6/ UART4/5/ 8	FDCAN1/2/ FMC/LCD/ OCTOSPIM _P1/2/SAI4 /SDMMC2/ SPDIFRX1/ TIM13/14	CRS/FMC/ LCD/OCT OSPIM_P1 /OTG1_FS/ OTG1_HS/ SAI4/ SDMMC2/ TIM8	DFSDM1/ ETH/I2C4/ LCD/MDIOS /OCTOSPIM _P1/SDMMC 2/SWPMI1/ TIM1x/TIM8/ UART7/9/ USART10	FMC/LCD /MDIOS/ OCTOSPI M_P1/ SDMMC1 /TIM1x/ TIM8	COMP/ DCMI/ PSSI/ LCD/ TIM1x/ TIM23	LCD/ TIM24/ UART5	SYS
Port D	PD0	-	-	-	DFSDM1_ CKIN6	-	-	-	-	UART4_ RX	FDCAN1_ RX	-	UART9_CTS	FMC_D2/ FMC_AD 2	-	LCD_B 1	EVENT OUT
	PD1	-	-	-	DFSDM1_ DATIN6	-	-	-	-	UART4_ TX	FDCAN1_ TX	-	-	FMC_D3/ FMC_AD 3	-	-	EVENT OUT
	PD2	TRAC ED2	FMC_D7/ FMC_AD 7	TIM3_ ETR	-	TIM15_ BKIN	-	-	-	UART5_ RX	LCD_B7	-	-	SDMMC1 _CMD	DCMI_ D11/ PSSI_ D11	LCD_B 2	EVENT OUT
	PD3	-	-	-	DFSDM1_ CKOUT	-	SPI2_SCK /I2S2_CK	-	USART2_ CTS/ USART2_ NSS	-	-	-	-	FMC_ CLK	DCMI_ D5/ PSSI_ D5	LCD_G 7	EVENT OUT
	PD4	-	-	-	-	-	-	-	USART2_ RTS/ USART2_ DE	-	-	OCTOSPI M_P1_IO4	-	FMC_ NOE	-	-	EVENT OUT
	PD5	-	-	-	-	-	-	-	USART2_ TX	-	-	OCTOSPI M_P1_IO5	-	FMC_NW E	-	-	EVENT OUT
	PD6	-	SAI4_D1	SAI1_D1	DFSDM1_ CKIN4	DFSDM1_ DATIN1	SPI3_ MOSI/I2S 3_SDO	SAI1_SD_ A	USART2_ RX	SAI4_SD_ A	-	OCTOSPI M_P1_IO6	SDMMC2_ CK	FMC_ NWAIT	DCMI_ D10/ PSSI_ D10	LCD_B 2	EVENT OUT
	PD7	-	-	-	DFSDM1_ DATIN4	-	SPI1_ MOSI/I2S 1_SDO	DFSDM1_ CKIN1	USART2_ CK	-	SPDIFRX1 _IN1	OCTOSPI M_P1_IO7	SDMMC2_ CMD	FMC_NE 1	-	-	EVENT OUT
	PD8	-	-	-	DFSDM1_ CKIN3	-	-	-	USART3_ TX	-	SPDIFRX1 _IN2	-	-	FMC_D1 3/FMC_A D13	-	-	EVENT OUT
	PD9	-	-	-	DFSDM1_ DATIN3	-	-	-	USART3_ RX	-	-	-	-	FMC_D1 4/FMC_ AD14	-	-	EVENT OUT

Table 8. STM32H730xB pin alternate functions (continued)

Port		AF0	AF1	AF2	AF3	AF4	AF5	AF6	AF7	AF8	AF9	AF10	AF11	AF12	AF13	AF14	AF15
		SYS	FMC/ LPTIM1/ SAI4/ TIM16/17 /TIM1x/ TIM2x	FDCAN3 /PDM_ SAI1/ TIM3/4/5 /12/15	DFSDM1/ LCD/ LPTIM2/3/ 4/5/ LPUART1 /OCTO SPIM_P1/ 2/TIM8	CEC/DCMI/ PSSI/ DFSDM1/ I2C1/2/3/4/5 /LPTIM2/ OCTOSPIM _P1/TIM15/ USART1/10	CEC/ FDCAN3/ SPI1/I2S1/ SPI2/I2S2/ SPI3/I2S3/ SPI4/5/6	DFSDM1/ I2C4/5/ OCTO SPIM_P1/ SAI1/SPI3/ I2S3/ UART4	SDMMC1/ SPI2/I2S2 /SPI3/I2S 3/SPI6/ UART7 /USART1/ 2/3/6	LPUART1 /SAI4/ SDMMC1/ SPDIFRX 1/SPI6/ UART4/5/ 8	FDCAN1/2/ FMC/LCD/ OCTOSPIM _P1/2/SAI4 /SDMMC2/ SPDIFRX1/ TIM13/14	CRS/FMC/ LCD/OCT OSPIM_P1 /OTG1_FS/ OTG1_HS/ SAI4/ SDMMC2/ TIM8	DFSDM1/ ETH/I2C4/ LCD/MDIOS /OCTOSPIM _P1/SDMMC 2/SWPMI1/ TIM1x/TIM8/ UART7/9/ USART10	FMC/LCD /MDIOS/ OCTOSPI M_P1/ SDMMC1 /TIM1x/ TIM8	COMP/ DCMI/ PSSI/ LCD/ TIM1x/ TIM23	LCD/ TIM24/ UART5	SYS
Prot D	PD10	-	-	-	DFSDM1_ CKOUT	-	-	-	USART3_ CK	-	-	-	-	FMC_D1 5/FMC_A D15	-	LCD_B 3	EVENT OUT
	PD11	-	-	-	LPTIM2_I N2	I2C4_SMB A	-	-	USART3_ CTS/USA RT3_NSS	-	OCTOSPIM _P1_IO0	SAI4_SD_ A	-	FMC_A16 /FMC_CL E	-	-	EVENT OUT
	PD12	-	LPTIM1_ IN1	TIM4_C H1	LPTIM2_I N1	I2C4_SCL	FDCAN3_ RX	-	USART3_ RTS/USA RT3_DE	-	OCTOSPIM _P1_IO1	SAI4_FS_ A	-	FMC_A17 /FMC_AL E	DCMI_ D12/PS SI_D12	-	EVENT OUT
	PD13	-	LPTIM1_ OUT	TIM4_C H2	-	I2C4_SDA	FDCAN3_ TX	-	-	-	OCTOSPIM _P1_IO3	SAI4_SCK _A	UART9_RTS /UART9_DE	FMC_A18	DCMI_ D13/PS SI_D13	-	EVENT OUT
	PD14	-	-	TIM4_C H3	-	-	-	-	-	UART8_C TS	-	-	UART9_RX	FMC_D0/ FMC_AD 0	-	-	EVENT OUT
	PD15	-	-	TIM4_C H4	-	-	-	-	-	UART8_R TS/UART 8_DE	-	-	UART9_TX	FMC_D1/ FMC_AD 1	-	-	EVENT OUT

Table 8. STM32H730xB pin alternate functions (continued)

Port		AF0	AF1	AF2	AF3	AF4	AF5	AF6	AF7	AF8	AF9	AF10	AF11	AF12	AF13	AF14	AF15
		SYS	FMC/ LPTIM1/ SAI4/ TIM16/17 /TIM1x/ TIM2x	FDCAN3 /PDM_ SAI1/ TIM3/4/5 /12/15	DFSDM1/ LCD/ LPTIM2/3/ 4/5/ LPUART1 /OCTO SPIM_P1/ 2/TIM8	CEC/DCMI/ PSSI/ DFSDM1/ I2C1/2/3/4/5 /LPTIM2/ OCTOSPIM _P1/TIM15/ USART1/10	CEC/ FDCAN3/ SPI1/I2S1/ SPI2/I2S2/ SPI3/I2S3/ SPI4/5/6	DFSDM1/ I2C4/5/ OCTO SPIM_P1/ SAI1/SPI3/ I2S3/ UART4	SDMMC1/ SPI2/I2S2 /SPI3/I2S 3/SPI6/ UART7 /USART1/ 2/3/6	LPUART1 /SAI4/ SDMMC1/ SPDIFRX 1/SPI6/ UART4/5/ 8	FDCAN1/2/ FMC/LCD/ OCTOSPIM _P1/2/SAI4 /SDMMC2/ SPDIFRX1/ TIM13/14	CRS/FMC/ LCD/OCT OSPIM_P1 /OTG1_FS/ OTG1_HS/ SAI4/ SDMMC2/ TIM8	DFSDM1/ ETH/I2C4/ LCD/MDIOS /OCTOSPIM _P1/SDMMC 2/SWPMI1/ TIM1x/TIM8/ UART7/9/ USART10	FMC/LCD /MDIOS/ OCTOSPI M_P1/ SDMMC1 /TIM1x/ TIM8	COMP/ DCMI/ PSSI/ LCD/ TIM1x/ TIM23	LCD/ TIM24/ UART5	SYS
Port E	PE0	-	LPTIM1_ ETR	TIM4_E TR	-	LPTIM2_ETR	-	-	-	UART8_R X	-	SAI4_MCL K_A	-	FMC_NB L0	DCMI_ D2/PS SI_D2	LCD_R 0	EVENT OUT
	PE1	-	LPTIM1_I N2	-	-	-	-	-	-	UART8_T X	-	-	-	FMC_NB L1	DCMI_ D3/PS SI_D3	LCD_R 6	EVENT OUT
	PE2	TRAC ECLK	-	SAI1_C K1	-	USART10_ RX	SPI4_SCK	SAI1_MCL K_A	-	SAI4_MC LK_A	OCTOSPIM _P1_IO2	SAI4_CK1	ETH_MII_TX D3	FMC_A23	-	-	EVENT OUT
	PE3	TRAC ED0	-	-	-	TIM15_BKI N	-	SAI1_SD_ B	-	SAI4_SD_ B	-	-	USART10_T X	FMC_A19	-	-	EVENT OUT
	PE4	TRAC ED1	-	SAI1_D2	DFSDM1_ DATIN3	TIM15_CH1 N	SPI4_NSS	SAI1_FS_A	-	SAI4_FS_ A	-	SAI4_D2	-	FMC_A20	DCMI_ D4/PS SI_D4	LCD_B 0	EVENT OUT
	PE5	TRAC ED2	-	SAI1_C K2	DFSDM1_ CKIN3	TIM15_CH1	SPI4_MIS O	SAI1_SCK _A	-	SAI4_SC K_A	-	SAI4_CK2	-	FMC_A21	DCMI_ D6/PS SI_D6	LCD_G 0	EVENT OUT
	PE6	TRAC ED3	TIM1_BKI N2	SAI1_D1	-	TIM15_CH2	SPI4_MO SI	SAI1_SD_ A	-	SAI4_SD_ A	SAI4_D1	SAI4_MCL K_B	TIM1_BKIN2 _COMP12	FMC_A22	DCMI_ D7/PS SI_D7	LCD_G 1	EVENT OUT
	PE7	-	TIM1_ET R	-	DFSDM1_ DATIN2	-	-	-	UART7_R X	-	-	OCTOSPI M_P1_IO4	-	FMC_D4/ FMC_AD 4	-	-	EVENT OUT
	PE8	-	TIM1_CH 1N	-	DFSDM1_ CKIN2	-	-	-	UART7_T X	-	-	OCTOSPI M_P1_IO5	-	FMC_D5/ FMC_AD 5	COMP 2_OUT	-	EVENT OUT
	PE9	-	TIM1_CH 1	-	DFSDM1_ CKOUT	-	-	-	UART7_R TS/UART 7_DE	-	-	OCTOSPI M_P1_IO6	-	FMC_D6/ FMC_AD 6	-	-	EVENT OUT
	PE10	-	TIM1_CH 2N	-	DFSDM1_ DATIN4	-	-	-	UART7_C TS	-	-	OCTOSPI M_P1_IO7	-	FMC_D7/ FMC_AD 7	-	-	EVENT OUT

Table 8. STM32H730xB pin alternate functions (continued)

Port		AF0	AF1	AF2	AF3	AF4	AF5	AF6	AF7	AF8	AF9	AF10	AF11	AF12	AF13	AF14	AF15
		SYS	FMC/ LPTIM1/ SAI4/ TIM16/17 /TIM1x/ TIM2x	FDCAN3 /PDM_ SAI1/ TIM3/4/5 /12/15	DFSDM1/ LCD/ LPTIM2/3/ 4/5/ LPUART1 /OCTO SPIM_P1/ 2/TIM8	CEC/DCMI/ PSSI/ DFSDM1/ I2C1/2/3/4/5 /LPTIM2/ OCTOSPIM _P1/TIM15/ USART1/10	CEC/ FDCAN3/ SPI1/I2S1/ SPI2/I2S2/ SPI3/I2S3/ SPI4/5/6	DFSDM1/ I2C4/5/ OCTO SPIM_P1/ SAI1/SPI3/ I2S3/ UART4	SDMMC1/ SPI2/I2S2 /SPI3/I2S 3/SPI6/ UART7 /USART1/ 2/3/6	LPUART1 /SAI4/ SDMMC1/ SPDIFRX 1/SPI6/ UART4/5/ 8	FDCAN1/2/ FMC/LCD/ OCTOSPIM _P1/2/SAI4 /SDMMC2/ SPDIFRX1/ TIM13/14	CRS/FMC/ LCD/OCT OSPIM_P1 /OTG1_FS/ OTG1_HS/ SAI4/ SDMMC2/ TIM8	DFSDM1/ ETH/I2C4/ LCD/MDIOS /OCTOSPIM _P1/SDMMC 2/SWPMI1/ TIM1x/TIM8/ UART7/9/ USART10	FMC/LCD /MDIOS/ OCTOSPI M_P1/ SDMMC1 /TIM1x/ TIM8	COMP/ DCMI/ PSSI/ LCD/ TIM1x/ TIM23	LCD/ TIM24/ UART5	SYS
Prot E	PE11	-	TIM1_CH 2	-	DFSDM1_ CKIN4	-	SPI4_NSS	-	-	-	-	SAI4_SD_ B	OCTOSPIM _P1_NCS	FMC_D8/ FMC_AD 8	-	LCD_G 3	EVENT OUT
	PE12	-	TIM1_CH 3N	-	DFSDM1_ DATIN5	-	SPI4_SCK	-	-	-	-	SAI4_SCK _B	-	FMC_D9/ FMC_AD 9	COMP 1_OUT	LCD_B 4	EVENT OUT
	PE13	-	TIM1_CH 3	-	DFSDM1_ CKIN5	-	SPI4_MIS O	-	-	-	-	SAI4_FS_ B	-	FMC_D1 0/FMC_A D10	COMP 2_OUT	LCD_D E	EVENT OUT
	PE14	-	TIM1_CH 4	-	-	-	SPI4_MO SI	-	-	-	-	SAI4_MCL K_B	-	FMC_D11 /FMC_AD 11	-	LCD_C LK	EVENT OUT
	PE15	-	TIM1_BKI N	-	-	-	-	-	-	-	-	-	USART10_C K	FMC_D1 2/FMC_A D12	TIM1_B KIN_C OMP12	LCD_R 7	EVENT OUT

Table 8. STM32H730xB pin alternate functions (continued)

Port		AF0	AF1	AF2	AF3	AF4	AF5	AF6	AF7	AF8	AF9	AF10	AF11	AF12	AF13	AF14	AF15
		SYS	FMC/ LPTIM1/ SAI4/ TIM16/17 /TIM1x/ TIM2x	FDCAN3 /PDM_ SAI1/ TIM3/4/5 /12/15	DFSDM1/ LCD/ LPTIM2/3/ 4/5/ LPUART1 /OCTO SPIM_P1/ 2/TIM8	CEC/DCMI/ PSSI/ DFSDM1/ I2C1/2/3/4/5 /LPTIM2/ OCTOSPIM _P1/TIM15/ USART1/10	CEC/ FDCAN3/ SPI1/I2S1/ SPI2/I2S2/ SPI3/I2S3/ SPI4/5/6	DFSDM1/ I2C4/5/ OCTO SPIM_P1/ SAI1/SPI3/ I2S3/ UART4	SDMMC1/ SPI2/I2S2 /SPI3/I2S 3/SPI6/ UART7 /USART1/ 2/3/6	LPUART1 /SAI4/ SDMMC1/ SPDIFRX 1/SPI6/ UART4/5/ 8	FDCAN1/2/ FMC/LCD/ OCTOSPIM _P1/2/SAI4 /SDMMC2/ SPDIFRX1/ TIM13/14	CRS/FMC/ LCD/OCT OSPIM_P1 /OTG1_FS/ OTG1_HS/ SAI4/ SDMMC2/ TIM8	DFSDM1/ ETH/I2C4/ LCD/MDIOS /OCTOSPIM _P1/SDMMC 2/SWPMI1/ TIM1x/TIM8/ UART7/9/ USART10	FMC/LCD /MDIOS/ OCTOSPI M_P1/ SDMMC1 /TIM1x/ TIM8	COMP/ DCMI/ PSSI/ LCD/ TIM1x/ TIM23	LCD/ TIM24/ UART5	SYS
Port F	PF0	-	-	-	-	I2C2_SDA	-	I2C5_SDA	-	-	OCTOSPIM _P2_IO0	-	-	FMC_A0	TIM23_ CH1	-	EVENT OUT
	PF1	-	-	-	-	I2C2_SCL	-	I2C5_SCL	-	-	OCTOSPIM _P2_IO1	-	-	FMC_A1	TIM23_ CH2	-	EVENT OUT
	PF2	-	-	-	-	I2C2_SMB A	-	I2C5_SMB A	-	-	OCTOSPIM _P2_IO2	-	-	FMC_A2	TIM23_ CH3	-	EVENT OUT
	PF3	-	-	-	-	-	-	-	-	-	OCTOSPIM _P2_IO3	-	-	FMC_A3	TIM23_ CH4	-	EVENT OUT
	PF4	-	-	-	-	-	-	-	-	-	OCTOSPIM _P2_CLK	-	-	FMC_A4	-	-	EVENT OUT
	PF5	-	-	-	-	-	-	-	-	-	OCTOSPIM _P2_NCLK	-	-	FMC_A5	-	-	EVENT OUT
	PF6	-	TIM16_C H1	FDCAN3 _RX	-	-	SPI5_NSS	SAI1_SD_ B	UART7_R X	SAI4_SD_ B	-	OCTOSPI M_P1_IO3	-	-	TIM23_ CH1	-	EVENT OUT
	PF7	-	TIM17_C H1	FDCAN3 _TX	-	-	SPI5_SCK	SAI1_MCL K_B	UART7_T X	SAI4_MC LK_B	-	OCTOSPI M_P1_IO2	-	-	TIM23_ CH2	-	EVENT OUT
	PF8	-	TIM16_C H1N	-	-	-	SPI5_MIS O	SAI1_SCK _B	UART7_R TS/UART 7_DE	SAI4_SC K_B	TIM13_CH 1	OCTOSPI M_P1_IO0	-	-	TIM23_ CH3	-	EVENT OUT

Table 8. STM32H730xB pin alternate functions (continued)

Port		AF0	AF1	AF2	AF3	AF4	AF5	AF6	AF7	AF8	AF9	AF10	AF11	AF12	AF13	AF14	AF15
		SYS	FMC/ LPTIM1/ SAI4/ TIM16/17 /TIM1x/ TIM2x	FDCAN3 /PDM_ SAI1/ TIM3/4/5 /12/15	DFSDM1/ LCD/ LPTIM2/3/ 4/5/ LPUART1 /OCTO SPIM_P1/ 2/TIM8	CEC/DCMI/ PSSI/ DFSDM1/ I2C1/2/3/4/5 /LPTIM2/ OCTOSPIM _P1/TIM15/ USART1/10	CEC/ FDCAN3/ SPI1/I2S1/ SPI2/I2S2/ SPI3/I2S3/ SPI4/5/6	DFSDM1/ I2C4/5/ OCTO SPIM_P1/ SAI1/SPI3/ I2S3/ UART4	SDMMC1/ SPI2/I2S2 /SPI3/I2S 3/SPI6/ UART7 /USART1/ 2/3/6	LPUART1 /SAI4/ SDMMC1/ SPDIFRX 1/SPI6/ UART4/5/ 8	FDCAN1/2/ FMC/LCD/ OCTOSPIM _P1/2/SAI4 /SDMMC2/ SPDIFRX1/ TIM13/14	CRS/FMC/ LCD/OCT OSPIM_P1 /OTG1_FS/ OTG1_HS/ SAI4/ SDMMC2/ TIM8	DFSDM1/ ETH/I2C4/ LCD/MDIOS /OCTOSPIM _P1/SDMMC 2/SWPMI1/ TIM1x/TIM8/ UART7/9/ USART10	FMC/LCD /MDIOS/ OCTOSPI M_P1/ SDMMC1 /TIM1x/ TIM8	COMP/ DCMI/ PSSI/ LCD/ TIM1x/ TIM23	LCD/ TIM24/ UART5	SYS
Port F	PF9	-	TIM17_C H1N	-	-	-	SPI5_MO SI	SAI1_FS_B	UART7_C TS	SAI4_FS_ B	TIM14_CH 1	OCTOSPI M_P1_IO1	-	-	TIM23_ CH4	-	EVENT OUT
	PF10	-	TIM16_B KIN	SAI1_D3	-	PSSI_D15	-	-	-	-	OCTOSPIM _P1_CLK	SAI4_D3	-	-	DCMI_ D11/PS SI_D11	LCD_D E	EVENT OUT
	PF11	-	-	-	-	-	SPI5_MO SI	-	-	-	OCTOSPIM _P1_NCLK	SAI4_SD_ B	-	FMC_NR AS	DCMI_ D12/PS SI_D12	TIM24_ CH1	EVENT OUT
	PF12	-	-	-	-	-	-	-	-	-	OCTOSPIM _P2_DQS	-	-	FMC_A6	-	TIM24_ CH2	EVENT OUT
	PF13	-	-	-	DFSDM1_ DATIN6	I2C4_SMB A	-	-	-	-	-	-	-	FMC_A7	-	TIM24_ CH3	EVENT OUT
	PF14	-	-	-	DFSDM1_ CKIN6	I2C4_SCL	-	-	-	-	-	-	-	FMC_A8	-	TIM24_ CH4	EVENT OUT
	PF15	-	-	-		I2C4_SDA	-	-	-	-	-	-	-	FMC_A9	-	-	EVENT OUT
Port G	PG0	-	-	-	-	-	-	-	-	-	OCTOSPIM _P2_IO4	-	UART9_RX	FMC_A10	-	-	EVENT OUT
	PG1	-	-	-	-	-	-	-	-	-	OCTOSPIM _P2_IO5	-	UART9_TX	FMC_A11	-	-	EVENT OUT
	PG2	-	-	-	TIM8_BKI N	-	-	-	-	-	-	-	TIM8_BKIN_ COMP12	FMC_A12	-	TIM24_ ETR	EVENT OUT
	PG3	-	-	-	TIM8_BKI N2	-	-	-	-	-	-	-	TIM8_BKIN2 _COMP12	FMC_A13	TIM23_ ETR	-	EVENT OUT

Table 8. STM32H730xB pin alternate functions (continued)

Port		AF0	AF1	AF2	AF3	AF4	AF5	AF6	AF7	AF8	AF9	AF10	AF11	AF12	AF13	AF14	AF15
		SYS	FMC/ LPTIM1/ SAI4/ TIM16/17 /TIM1x/ TIM2x	FDCAN3 /PDM_ SAI1/ TIM3/4/5 /12/15	DFSDM1/ LCD/ LPTIM2/3/ 4/5/ LPUART1 /OCTO SPIM_P1/ 2/TIM8	CEC/DCMI/ PSSI/ DFSDM1/ I2C1/2/3/4/5 /LPTIM2/ OCTOSPIM _P1/TIM15/ USART1/10	CEC/ FDCAN3/ SPI1/I2S1/ SPI2/I2S2/ SPI3/I2S3/ SPI4/5/6	DFSDM1/ I2C4/5/ OCTO SPIM_P1/ SAI1/SPI3/ I2S3/ UART4	SDMMC1/ SPI2/I2S2 /SPI3/I2S 3/SPI6/ UART7 /USART1/ 2/3/6	LPUART1 /SAI4/ SDMMC1/ SPDIFRX 1/SPI6/ UART4/5/ 8	FDCAN1/2/ FMC/LCD/ OCTOSPIM _P1/2/SAI4 /SDMMC2/ SPDIFRX1/ TIM13/14	CRS/FMC/ LCD/OCT OSPIM_P1 /OTG1_FS/ OTG1_HS/ SAI4/ SDMMC2/ TIM8	DFSDM1/ ETH/I2C4/ LCD/MDIOS /OCTOSPIM _P1/SDMMC 2/SWPMI1/ TIM1x/TIM8/ UART7/9/ USART10	FMC/LCD /MDIOS/ OCTOSPI M_P1/ SDMMC1 /TIM1x/ TIM8	COMP/ DCMI/ PSSI/ LCD/ TIM1x/ TIM23	LCD/ TIM24/ UART5	SYS
Port G	PG4	-	TIM1_BKI N2	-	-	-	-	-	-	-	-	-	TIM1_BKIN2 _COMP12	FMC_A14 /FMC_BA 0	-	-	EVENT OUT
	PG5	-	TIM1_ET R	-	-	-	-	-	-	-	-	-	-	FMC_A15 /FMC_BA 1	-	-	EVENT OUT
	PG6	-	TIM17_B KIN	-	-	-	-	-	-	-	-	OCTOSPI M_P1_NC S	-	FMC_NE 3	DCMI_ D12/PS SI_D12	LCD_R 7	EVENT OUT
	PG7	-	-	-	-	-	-	SAI1_MCL K_A	USART6_ CK	-	OCTOSPIM _P2_DQS	-	-	FMC_INT	DCMI_ D13/PS SI_D13	LCD_C LK	EVENT OUT
	PG8	-	-	-	TIM8_ET R	-	SPI6_NSS /I2S6_WS	-	USART6_ RTS/USA RT6_DE	SPDIFRX 1_IN3	-	-	ETH_PPS_ OUT	FMC_SD CLK	-	LCD_G 7	EVENT OUT
	PG9	-	-	FDCAN3 _TX	-	-	SPI1_MIS O/I2S1_S DI	-	USART6_ RX	SPDIFRX 1_IN4	OCTOSPIM _P1_IO6	SAI4_FS_ B	SDMMC2_D 0	FMC_NE 2/FMC_N CE	DCMI_ VSYNC /PSSI_ RDY	-	EVENT OUT
	PG10	-	-	FDCAN3 _RX	OCTOSPI M_P2_IO 6	-	SPI1_NSS /I2S1_WS	-	-	-	LCD_G3	SAI4_SD_ B	SDMMC2_D 1	FMC_NE 3	DCMI_ D2/PS SI_D2	LCD_B 2	EVENT OUT
	PG11	-	LPTIM1_I N2	-	-	USART10_ RX	SPI1_SCK /I2S1_CK	-	-	SPDIFRX 1_IN1	OCTOSPIM _P2_IO7	SDMMC2_ D2	ETH_MII_TX _EN/ETH_R MII_TX_EN	-	DCMI_ D3/PS SI_D3	LCD_B 3	EVENT OUT
	PG12	-	LPTIM1_I N1	-	OCTOSPI M_P2_NC S	USART10_ TX	SPI6_MIS O/I2S6_S DI	-	USART6_ RTS/USA RT6_DE	SPDIFRX 1_IN2	LCD_B4	SDMMC2_ D3	ETH_MII_TX D1/ETH_RM II_TXD1	FMC_NE 4	TIM23_ CH1	LCD_B 1	EVENT OUT
	PG13	TRAC ED0	LPTIM1_ OUT	-	-	USART10_ CTS/USAR T10_NSS	SPI6_SCK /I2S6_CK	-	USART6_ CTS/USA RT6_NSS	-	-	SDMMC2_ D6	ETH_MII_TX D0/ETH_RM II_TXD0	FMC_A24	TIM23_ CH2	LCD_R 0	EVENT OUT

Table 8. STM32H730xB pin alternate functions (continued)

Port		AF0	AF1	AF2	AF3	AF4	AF5	AF6	AF7	AF8	AF9	AF10	AF11	AF12	AF13	AF14	AF15
		SYS	FMC/ LPTIM1/ SAI4/ TIM16/17 /TIM1x/ TIM2x	FDCAN3 /PDM_ SAI1/ TIM3/4/5 /12/15	DFSDM1/ LCD/ LPTIM2/3/ 4/5/ LPUART1 /OCTO SPIM_P1/ 2/TIM8	CEC/DCMI/ PSSI/ DFSDM1/ I2C1/2/3/4/5 /LPTIM2/ OCTOSPIM _P1/TIM15/ USART1/10	CEC/ FDCAN3/ SPI1/I2S1/ SPI2/I2S2/ SPI3/I2S3/ SPI4/5/6	DFSDM1/ I2C4/5/ OCTO SPIM_P1/ SAI1/SPI3/ I2S3/ UART4	SDMMC1/ SPI2/I2S2 /SPI3/I2S 3/SPI6/ UART7 /USART1/ 2/3/6	LPUART1 /SAI4/ SDMMC1/ SPDIFRX 1/SPI6/ UART4/5/ 8	FDCAN1/2/ FMC/LCD/ OCTOSPIM _P1/2/SAI4 /SDMMC2/ SPDIFRX1/ TIM13/14	CRS/FMC/ LCD/OCT OSPIM_P1 /OTG1_FS/ OTG1_HS/ SAI4/ SDMMC2/ TIM8	DFSDM1/ ETH/I2C4/ LCD/MDIOS /OCTOSPIM _P1/SDMMC 2/SWPMI1/ TIM1x/TIM8/ UART7/9/ USART10	FMC/LCD /MDIOS/ OCTOSPI M_P1/ SDMMC1 /TIM1x/ TIM8	COMP/ DCMI/ PSSI/ LCD/ TIM1x/ TIM23	LCD/ TIM24/ UART5	SYS
Prot G	PG14	TRACED1	LPTIM1_ETR	-	-	USART10_RTS/USART10_DE	SPI6_MOSI/I2S6_SDO	-	USART6_TX	-	OCTOSPIM_P1_IO7	SDMMC2_D7	ETH_MII_TXD1/ETH_RMII_TXD1	FMC_A25	TIM23_CH3	LCD_B0	EVENTOUT
	PG15	-	-	-	-	-	-	-	USART6_CTS/USART6_NSS	-	OCTOSPIM_P2_DQS	-	USART10_CK	FMC_NCAS	DCMI_D13/PSSI_D13	-	EVENTOUT
Port H	PH0	-	-	-	-	-	-	-	-	-	-	-	-	-	-	-	EVENTOUT
	PH1	-	-	-	-	-	-	-	-	-	-	-	-	-	-	-	EVENTOUT
	PH2	-	LPTIM1_IN2	-	-	-	-	-	-	-	OCTOSPIM_P1_IO4	SAI4_SCK_B	ETH_MII_CRS	FMC_SDCKE0	-	LCD_R0	EVENTOUT
	PH3	-	-	-	-	-	-	-	-	-	OCTOSPIM_P1_IO5	SAI4_MCLK_B	ETH_MII_COL	FMC_SDNE0	-	LCD_R1	EVENTOUT
	PH4	-	-	-	-	I2C2_SCL	-	-	-	-	LCD_G5	OTG_HS_ULPI_NXT	-	-	PSSI_D14	LCD_G4	EVENTOUT
	PH5	-	-	-	-	I2C2_SDA	SPI5_NSS	-	-	-	-	-	-	FMC_SDNWE	-	-	EVENTOUT
	PH6	-	-	TIM12_CH1	-	I2C2_SMBA	SPI5_SCK	-	-	-	-	-	ETH_MII_RXD2	FMC_SDNE1	DCMI_D8/PSSI_D8	-	EVENTOUT
	PH7	-	-	-	-	I2C3_SCL	SPI5_MISO	-	-	-	-	-	ETH_MII_RXD3	FMC_SDCKE1	DCMI_D9/PSSI_D9	-	EVENTOUT
	PH8	-	-	TIM5_ETR	-	I2C3_SDA	-	-	-	-	-	-	-	FMC_D16	DCMI_HSYNC/PSSI_DE	LCD_R2	EVENTOUT
	PH9	-	-	TIM12_CH2	-	I2C3_SMBA	-	-	-	-	-	-	-	FMC_D17	DCMI_D0/PSSI_D0	LCD_R3	EVENTOUT

Table 8. STM32H730xB pin alternate functions (continued)

Port		AF0	AF1	AF2	AF3	AF4	AF5	AF6	AF7	AF8	AF9	AF10	AF11	AF12	AF13	AF14	AF15
		SYS	FMC/ LPTIM1/ SAI4/ TIM16/17 /TIM1x/ TIM2x	FDCAN3 /PDM_ SAI1/ TIM3/4/5 /12/15	DFSDM1/ LCD/ LPTIM2/3/ 4/5/ LPUART1 /OCTO SPIM_P1/ 2/TIM8	CEC/DCMI/ PSSI/ DFSDM1/ I2C1/2/3/4/5 /LPTIM2/ OCTOSPIM _P1/TIM15/ USART1/10	CEC/ FDCAN3/ SPI1/I2S1/ SPI2/I2S2/ SPI3/I2S3/ SPI4/5/6	DFSDM1/ I2C4/5/ OCTO SPIM_P1/ SAI1/SPI3/ I2S3/ UART4	SDMMC1/ SPI2/I2S2 /SPI3/I2S 3/SPI6/ UART7 /USART1/ 2/3/6	LPUART1 /SAI4/ SDMMC1/ SPDIFRX 1/SPI6/ UART4/5/ 8	FDCAN1/2/ FMC/LCD/ OCTOSPIM _P1/2/SAI4 /SDMMC2/ SPDIFRX1/ TIM13/14	CRS/FMC/ LCD/OCT OSPIM_P1 /OTG1_FS/ OTG1_HS/ SAI4/ SDMMC2/ TIM8	DFSDM1/ ETH/I2C4/ LCD/MDIOS /OCTOSPIM _P1/SDMMC 2/SWPMI1/ TIM1x/TIM8/ UART7/9/ USART10	FMC/LCD /MDIOS/ OCTOSPI M_P1/ SDMMC1 /TIM1x/ TIM8	COMP/ DCMI/ PSSI/ LCD/ TIM1x/ TIM23	LCD/ TIM24/ UART5	SYS
Port H	PH10	-	-	TIM5_C H1	-	I2C4_SMB A	-	-	-	-	-	-	-	FMC_D1 8	DCMI_ D1/PS SI_D1	LCD_R 4	EVENT OUT
	PH11	-	-	TIM5_C H2	-	I2C4_SCL	-	-	-	-	-	-	-	FMC_D1 9	DCMI_ D2/PS SI_D2	LCD_R 5	EVENT OUT
	PH12	-	-	TIM5_C H3	-	I2C4_SDA	-	-	-	-	-	-	-	FMC_D2 0	DCMI_ D3/PS SI_D3	LCD_R 6	EVENT OUT
	PH13	-	-	-	TIM8_CH 1N	-	-	-	-	UART4_T X	FDCAN1_T X	-	-	FMC_D2 1	-	LCD_G 2	EVENT OUT
	PH14	-	-	-	TIM8_CH 2N	-	-	-	-	UART4_R X	FDCAN1_R X	-	-	FMC_D2 2	DCMI_ D4/PS SI_D4	LCD_G 3	EVENT OUT
	PH15	-	-	-	TIM8_CH 3N	-	-	-	-	-	-	-	-	FMC_D2 3	DCMI_ D11/PS SI_D11	LCD_G 4	EVENT OUT
Port J	PJ8	-	TIM1_CH 3N	-	TIM8_CH 1	-	-	-	-	UART8_T X	-	-	-	-	-	LCD_G 1	EVENT OUT
	PJ9	-	TIM1_CH 3	-	TIM8_CH 1N	-	-	-	-	UART8_R X	-	-	-	-	-	LCD_G 2	EVENT OUT
	PJ10	-	TIM1_CH 2N	-	TIM8_CH 2	-	SPI5_MO SI	-	-	-	-	-	-	-	-	LCD_G 3	EVENT OUT
	PJ11	-	TIM1_CH 2	-	TIM8_CH 2N	-	SPI5_MIS O	-	-	-	-	-	-	-	-	LCD_G 4	EVENT OUT

6 Electrical characteristics

6.1 Parameter conditions

Unless otherwise specified, all voltages are referenced to V_{SS}.

6.1.1 Minimum and maximum values

Unless otherwise specified the minimum and maximum values are guaranteed in the worst conditions of junction temperature, supply voltage and frequencies by tests in production on 100% of the devices with a junction temperature at T_J = 25 °C and T_J = T_{Jmax} (given by the selected temperature range).

Data based on characterization results, design simulation and/or technology characteristics are indicated in the table footnotes. Based on characterization, the minimum and maximum values refer to sample tests and represent the mean value plus or minus three times the standard deviation (mean±3σ).

6.1.2 Typical values

Unless otherwise specified, typical data are based on T_J = 25 °C, V_{DD} = 3.3 V (for the 1.7 V ≤ V_{DD} ≤ 3.6 V voltage range). They are given only as design guidelines and are not tested.

Typical ADC accuracy values are determined by characterization of a batch of samples from a standard diffusion lot over the full temperature range, where 95% of the devices have an error less than or equal to the value indicated (mean±2σ).

6.1.3 Typical curves

Unless otherwise specified, all typical curves are given only as design guidelines and are not tested.

6.1.4 Loading capacitor

The loading conditions used for pin parameter measurement are shown in *Figure 11*.

6.1.5 Pin input voltage

The input voltage measurement on a pin of the device is described in *Figure 12*.

Figure 11. Pin loading conditions

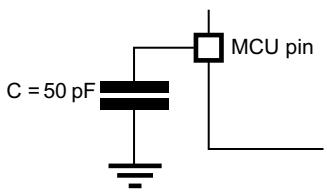

Figure 12. Pin input voltage

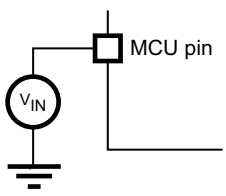

6.1.6 Power supply scheme

Figure 13. Power supply scheme

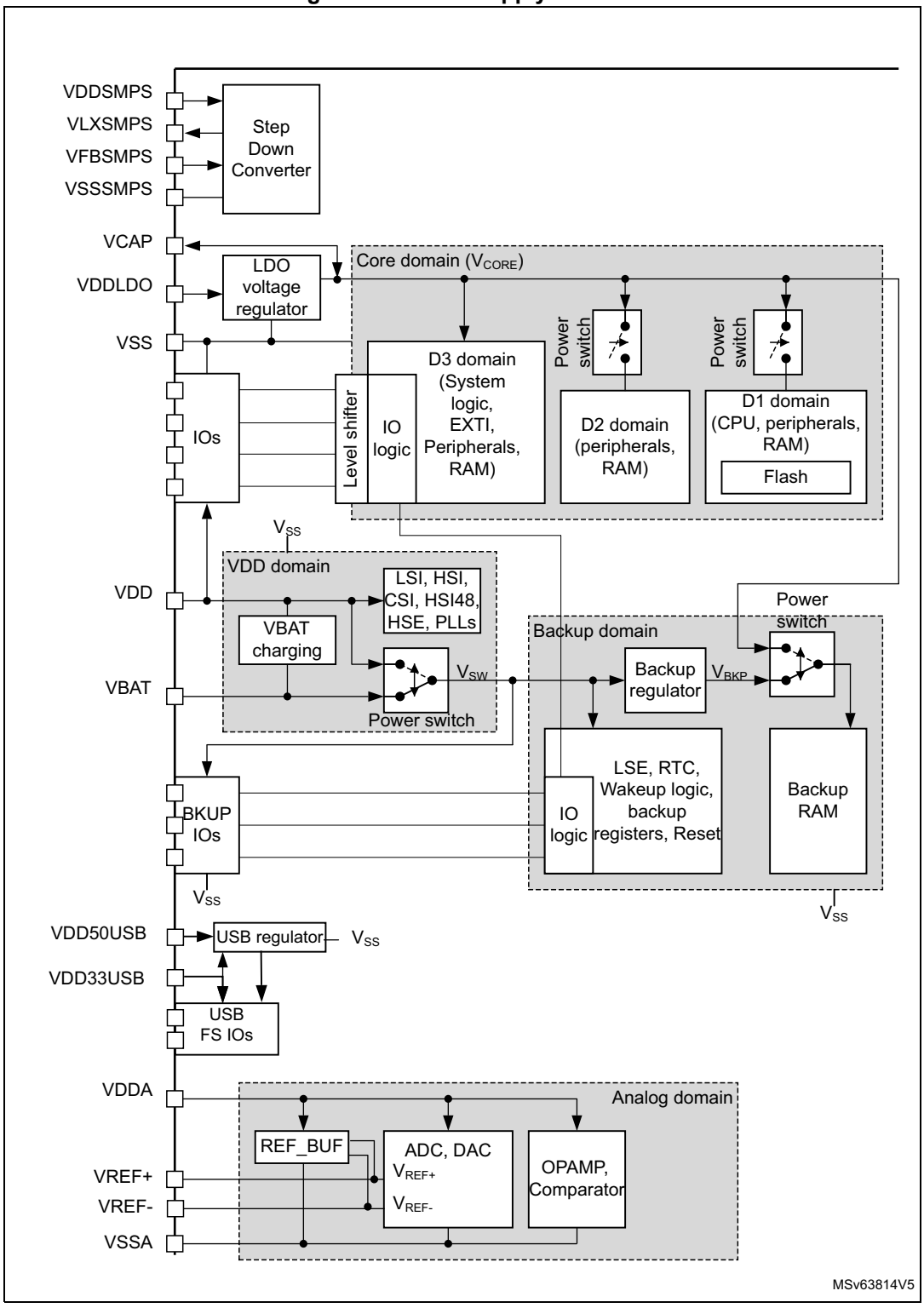

1. Refer to application note AN5419 "*Getting started with STM32H723/733, STM32H725/735 and STM32H730 Value Line hardware development*" for the possible power scheme and connected capacitors.

6.1.7 Current consumption measurement

Figure 14. Current consumption measurement scheme

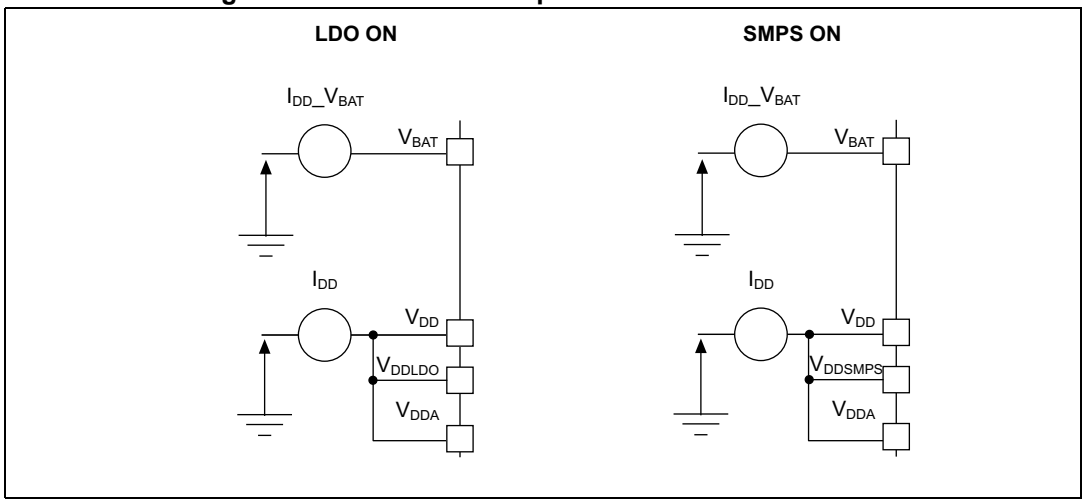

6.2 Absolute maximum ratings

Stresses above the absolute maximum ratings listed in *Table 9: Voltage characteristics*, *Table 10: Current characteristics*, and *Table 11: Thermal characteristics* may cause permanent damage to the device. These are stress ratings only and the functional operation of the device at these conditions is not implied. Exposure to maximum rating conditions for extended periods may affect device reliability. Device mission profile (application conditions) is compliant with JEDEC JESD47 Qualification Standard, extended mission profiles are available on demand.

Note: For information on product lifetime estimation, refer to application note AN5337: Guidelines for estimating STM32H7 MCUs lifetime, available from the STMicroelectronics website www.st.com.

Table 9. Voltage characteristics

Symbols	Ratings	Min	Max	Unit
V_{DDX} - V_{SS}(1)	External main supply voltage (including V_{DD}, V_{DDLDO}, V_{DDSMPS}, V_{DDA}, $V_{DD33USB}$, V_{BAT})	−0.3	4.0	V
V_{IN}(2)	Input voltage on FT_xxx pins	V_{SS}−0.3	Min(V_{DD}, V_{DDA}, $V_{DD33USB}$, V_{BAT}) +4.0(3)(4)	V
	Input voltage on TT_xx pins	V_{SS}−0.3	4.0	V
	Input voltage on BOOT0 pin	V_{SS}	9.0	V
	Input voltage on any other pins	V_{SS}-0.3	4.0	V
$\lvert\Delta V_{DDX}\rvert$	Variations between different V_{DDX} power pins of the same domain	-	50	mV
$\lvert V_{SSx}-V_{SS}\rvert$	Variations between all the different ground pins	-	50	mV

1. All main power (V_{DD}, V_{DDA}, $V_{DD33USB}$, V_{DDSMPS}, V_{BAT}) and ground (V_{SS}, V_{SSA}) pins must always be connected to the external power supply, in the permitted range.
2. V_{IN} maximum must always be respected. Refer to *Table 53: I/O current injection susceptibility* for the maximum allowed injected current values.
3. This formula has to be applied on power supplies related to the IO structure described by the pin definition table.
4. To sustain a voltage higher than 4 V the internal pull-up/pull-down resistors must be disabled.

Table 10. Current characteristics

Symbols	Ratings	Max	Unit
ΣIV_{DD}	Total current into sum of all V_{DD} power lines (source)(1)	620	mA
ΣIV_{SS}	Total current out of sum of all V_{SS} ground lines (sink)(1)	620	
IV_{DD}	Maximum current into each V_{DD} power pin (source)(1)	100	
IV_{SS}	Maximum current out of each V_{SS} ground pin (sink)(1)	100	
I_{IO}	Output current sunk or sourced by any I/O and control pin, except Pxy_C	20	
	Output current sunk or sourced by Pxy_C pins	1	
$\Sigma I_{(PIN)}$	Total output current sunk by sum of all I/Os and control pins(2)	140	
	Total output current sourced by sum of all I/Os and control pins(2)	140	
$I_{INJ(PIN)}$(3)(4)	Injected current on FT_xxx, TT_xx, RST and B pins except PA4, PA5	−5/+0	
	Injected current on PA4, PA5	−0/0	
$\Sigma I_{INJ(PIN)}$	Total injected current (sum of all I/Os and control pins)(5)	±25	

1. All main power (V_{DD}, V_{DDA}, $V_{DD33USB}$) and ground (V_{SS}, V_{SSA}) pins must always be connected to the external power supplies, in the permitted range.
2. This current consumption must be correctly distributed over all I/Os and control pins. The total output current must not be sunk/sourced between two consecutive power supply pins referring to high pin count QFP packages.
3. Positive injection is not possible on these I/Os and does not occur for input voltages lower than the specified maximum value.
4. A positive injection is induced by $V_{IN}>V_{DD}$ while a negative injection is induced by $V_{IN}<V_{SS}$. $I_{INJ(PIN)}$ must never be exceeded. Refer also to *Table 9: Voltage characteristics* for the maximum allowed input voltage values.
5. When several inputs are submitted to a current injection, the maximum $\Sigma I_{INJ(PIN)}$ is the absolute sum of the positive and negative injected currents (instantaneous values).

Table 11. Thermal characteristics

Symbol	Ratings		Value	Unit
T_{STG}	Storage temperature range		− 65 to +150	°C
T_J	Maximum junction temperature	Industrial temperature range 6	125	

6.3 Operating conditions

6.3.1 General operating conditions

Table 12. General operating conditions

Symbol	Parameter	Operating conditions	Min	Typ	Max	Unit
V_{DD}	Standard operating voltage	-	1.62(1)	-	3.6	V
V_{DDLDO}	Supply voltage for the internal regulator	$V_{DDLDO} \leq V_{DD}$	1.62(1)	-	3.6	
V_{DDSMPS}	Supply voltage for the internal SMPS Step-down converter	$V_{DDSMPS} = V_{DD}$	1.62(1)	-	3.6	
$V_{DD50USB}$	-	USB regulator ON	4	5	5.5	
		USB regulator OFF	-	$V_{DD33USB}$	-	
$V_{DD33USB}$	Standard operating voltage, USB domain	USB used	3.0	-	3.6	
		USB not used	0	-	3.6	
V_{DDA}	Analog operating voltage	ADC or COMP used	1.62	-	3.6	
		DAC used	1.8	-		
		OPAMP used	2.0	-		
		VREFBUF used	1.8	-		
		ADC, DAC, OPAMP, COMP, VREFBUF not used	0	-		
V_{BAT}	Supply voltage for Backup domain	-	1.2(2)	-	3.6	
V_{IN}	I/O Input voltage	TT_xx I/O except Pxy_C	−0.3	-	V_{DD}+0.3	
		Pxy_C I/O	−0.3	-	Min(V_{DDA}, V_{DD}) + 0.3	
		BOOT0	0	-	9	
		All I/Os except BOOT0, TT_xx and Pxy_C	−0.3	-	Min(V_{DD}, V_{DDA}, $V_{DD33USB}$) + 3.6 < 5.5(3)	

Table 12. General operating conditions (continued)

Symbol	Parameter	Operating conditions	Min	Typ	Max	Unit
V_{CORE}	Internal regulator ON (LDO or SMPS)(4)	VOS3	0.95	1.0	1.05	V
		VOS2	1.05	1.10	1.15	
		VOS1	1.15	1.21	1.26	
		VOS0	1.30	1.36	1.40	
	Regulator OFF: external V_{CORE} voltage must be supplied from external regulator on VCAP pins	VOS3	0.98	1.03	1.08	
		VOS2	1.08	1.13	1.18	
		VOS1	1.18	1.23	1.28	
		VOS0	1.33	1.38	1.40	
f_{CPU}	Arm® Cortex®-M7 clock frequency	VOS3	-	-	170	MHz
		VOS2	-	-	300	
		VOS1	-	-	400	
		VOS0	-	-	520	
		VOS0 and CPU_FREQ_BOOST	-	-	550	
f_{ACLK}	AXI clock frequency	VOS3	-	-	85	
		VOS2	-	-	150	
		VOS1	-	-	200	
		VOS0	-	-	275	
f_{HCLK}	AHB clock frequency	VOS3	-	-	85	
		VOS2	-	-	150	
		VOS1	-	-	200	
		VOS0	-	-	275	
f_{PCLK}	APB clock frequency	VOS3	-	-	42.5(5)	
		VOS2	-	-	75	
		VOS1	-	-	100	
		VOS0	-	-	137.5	
T_A(6)	Ambient temperature for temperature range 3	Maximum power dissipation	−40		125	°C
	Ambient temperature for temperature range 6	Maximum power dissipation	−40		85	
		Low-power dissipation(7)	−40		105	

1. When RESET is released, the functionality is guaranteed down to V_{PDRmax} or down to the specified V_{DDmin} when the PDR is OFF. The PDR can only be switched OFF though the PDR_ON pin that not available in all packages.
2. V_{BAT} minimum value can be reduced to 0 V if V_{DD} is present.
3. This formula has to be applied on power supplies related to the I/O structure described by the pin definition table.
4. At startup, the external V_{CORE} voltage must remain higher or equal to 1.10 V before disabling the internal regulator (LDO).

5. This value corresponds to the maximum APB clock frequency when at least one peripheral is enabled.
6. The device junction temperature must be kept below maximum T_J indicated in *Table 13: Supply voltage and maximum temperature configuration* and the maximum temperature.
7. In low-power dissipation state, T_A can be extended to this range as long as T_J does not exceed T_{Jmax} (see *Section 7.9: Thermal characteristics*).

Table 13. Supply voltage and maximum temperature configuration

Power scale	V_{CORE} source	Max. T_J (°C)(1)	Min. V_{DD}(V)	Min. V_{DDLDO} (V)
VOS0	SMPS	105	2.2	-
	LDO		1.7	1.7
	SMPS supplies LDO		3(2)	1.7
	External (Bypass)		1.62	-
VOS1	SMPS	140	2.2	-
		125	1.62	-
	LDO		1.62	1.62
	SMPS supplies LDO		2.3	-
	External (Bypass)		1.62	-
VOS2	SMPS	140	1.62	-
	LDO	125	1.62	1.62
	SMPS supplies LDO		2.3	-
	External (Bypass)		1.62	-
VOS3	SMPS	140	1.62	-
	LDO	125	1.62	1.62
	SMPS supplies LDO		2.3	-
	External (Bypass)		1.62	-
SVOS4/SVOS5	SMPS	140	1.62	-
	LDO	125	2	2
		105	1.62	1.62
	SMPS supplies LDO	125	3(2)	2
		105	2.3	-
	External (Bypass)	125	1.62	-

1. 140 °C can be reached only for part numbers in temperature range 3. For part numbers in temperature range 6, this value must be decreased to 125 °C.
2. The SMPS must be configured to output 2,5 V.

6.3.2 VCAP external capacitor

Stabilization for the main regulator is achieved by connecting an external capacitor C_{EXT} to the VCAP pin. C_{EXT} is specified in *Table 14*. Two external capacitors can be connected to VCAP pins.

Figure 15. External capacitor C_{EXT}

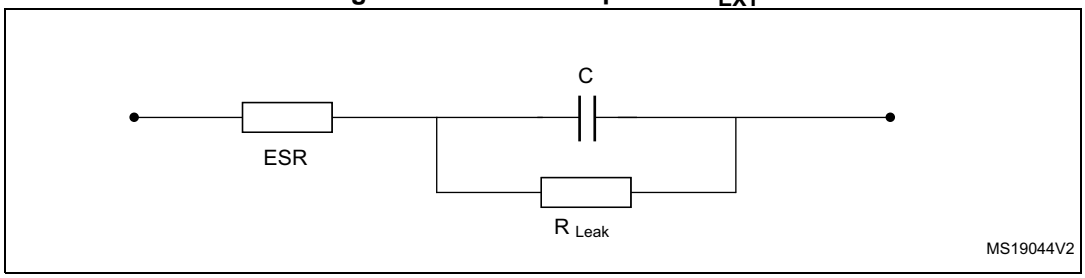

1. Legend: ESR is the equivalent series resistance.

Table 14. VCAP operating conditions(1)

Symbol	Parameter	Conditions
CEXT	Capacitance of external capacitor	2.2 µF(2)(3)
ESR	ESR of external capacitor	< 100 mΩ

1. When bypassing the voltage regulator, the two 2.2 µF V_{CAP} capacitors are not required and should be replaced by two 100 nF decoupling capacitors.
2. This value corresponds to CEXT typical value. A variation of +/-20% is tolerated.
3. If a third VCAP pin is available on the package, it must be connected to the other VCAP pins but no additional capacitor is required.

6.3.3 SMPS step-down converter

The devices embed a high power efficiency SMPS step-down converter. SMPS characteristics for external usage are given in *Table 16*. The SMPS step-down converter requires external components that are fully described in AN5419 *"Getting started with STM32H723/733, STM32H725/735 and STM32H730 Value Line hardware development"*. The components used for datasheet characterization are specified in *Figure 16* and *Table 15*.

Figure 16. External components for SMPS step-down converter

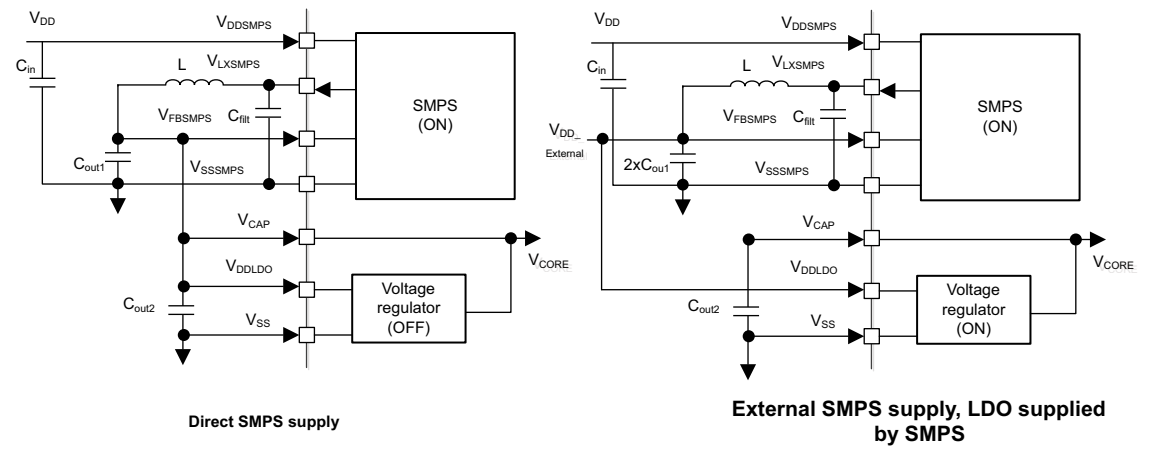

Table 15. Characteristics of SMPS step-down converter external components

Symbol	Parameter	Conditions
C_{in}	Capacitance of external capacitor on V_{DDSMPS}	4.7 µF
	ESR of external capacitor	100 mΩ
C_{filt}	Capacitance of external capacitor on V_{LXSMPS} pin	220 pF
C_{OUT}	Capacitance of external capacitor on V_{FBSMPS} pin	10 µF
	ESR of external capacitor	20 mΩ
L	Inductance of external Inductor on V_{LXSMPS} pin	2.2 µH
-	Serial DC resistor	150 mΩ
I_{SAT}	DC current at which the inductance drops 30% from its value without current.	1.7 A
I_{RMS}	Average current for a 40 °C rise: rated current for which the temperature of the inductor is raised 40°C by DC current	1.4 A

Table 16. SMPS step-down converter characteristics for external usage

Parameters	Conditions	Min	Typ	Max	Unit
V_{DDSMPS}(1)	V_{OUT} = 1.8 V	2.3	-	3.6	V
	V_{OUT} = 2.5 V	3	-	3.6	
V_{OUT}(2)	Iout=600 mA	2.25	2.5	2.75	V
		1.62	1.8	1.98	
I_{OUT}	internal and external usage	-	-	600	mA
	External usage only(3)	-	-	600	
RDS_{ON}	-	-	100	120	mΩ
I_{DDSMPS_Q}	Quiescent current	-	220	-	µA

Table 16. SMPS step-down converter characteristics for external usage (continued)

Parameters	Conditions	Min	Typ	Max	Unit
T_{SMPS_START}	V_{OUT} = 1.8 V	-	270	405	µs
	V_{OUT} = 2.5 V	-	360	540	

1. The switching frequency is 2.4 MHz±10%
2. Including line transient and load transient.
3. These characteristics are given for SDEXTHP bit is set in the PWR_CR3 register.

Table 17. Inrush current and inrush electric charge characteristics for LDO and SMPS(1)(2)

Symbol	Parameter	Conditions	-	Min	Typ	Max	Unit
I_{RUSH}	Inrush current on voltage regulator power-on (POR or wakeup from Standby)	on V_{DDLDO}(3)	-	-	55	96(4)	mA
		on V_{DDSMPS}(5)	SMPS supplies the V_{DDCORE}	-	100	420(6)	
	Inrush current on voltage regulator power-on (POR)	on V_{DDSMPS}(5)	SMPS supplies internal LDO, V_{OUT} = 1. 8 V(7)	-	130	400(6)	
			SMPS supplies internal LDO, V_{OUT} = 2.5 V(7)	-	-	300(6)	
			SMPS supplies external circuit, V_{OUT} = 1.8 V(7)	-	100	320(6)	
			SMPS supplies external circuit, V_{OUT} = 2.5 V(7)	-	-	240(6)	
	Inrush current on voltage regulator power-on (wakeup from Standby)	on V_{DDSMPS}(5)	SMPS supplies internal LDO, V_{OUT} = 1.8 V	-	170	530(6)	
			SMPS supplies internal LDO, V_{OUT} = 2.5 V	-	240	550(6)	

Table 17. Inrush current and inrush electric charge characteristics for LDO and SMPS(1)(2) (continued)

Symbol	Parameter	Conditions	-	Min	Typ	Max	Unit
Q_{RUSH}	Inrush current on voltage regulator power-on (POR or wakeup from Standby)	on V_{DDLDO}(3)	-	-	4.4	5.3(4)	µC
		on V_{DDSMPS}(5)	SMPS supplies the V_{DDCORE}	-	7.3	18(6)	
	Inrush current on voltage regulator power-on (POR)	on V_{DDSMPS}(5)	SMPS supplies internal LDO, V_{OUT} = 1. 8 V(7)	-	8.8	17(6)	
			SMPS supplies internal LDO, V_{OUT} = 2.5 V(7)	-		13(6)	
			SMPS supplies external circuit, V_{OUT} = 1.8 V(7)	-	7.3	13.7(6)	
			SMPS supplies external circuit, V_{OUT} = 2.5 V(7)	-		10.5(6)	
	Inrush current on voltage regulator power-on (wakeup from Standby)	on V_{DDSMPS}(5)	SMPS supplies internal LDO, V_{OUT} = 1.8 V	-	15.0	28(6)	
			SMPS supplies internal LDO, V_{OUT} = 2.5 V	-	28.0	39(6)	

1. The typical values are given for V_{DDLDO} = V_{DDSMPS} = 3.3 V and for typical decoupling capacitor values of C_{EXT} and C_{OUT}.
2. The product consumption (on VDDCORE) is not taken into account in the inrush current and inrush electric charges.
3. The inrush current and inrush electric charge on VDDLDO are not present in Bypass mode or when the SMPS supplies the VDDCORE.
4. The maximum value is given for the maximum decoupling capacitor C_{EXT}.
5. The inrush current and inrush electric charges on VDDSMPS are not present if the external component (L or C_{OUT}) is not present that is if the SMPS is not used.
6. The maximum value is given for the maximum decoupling capacitor C_{OUT} and the minimum V_{DDSMPS} voltage.
7. The inrush current due to transition from 1.2 V to the final V_{OUT} Value (1.8 V or 2.5 V) is not taken into account.

6.3.4 Operating conditions at power-up / power-down

Subject to general operating conditions for T_A.

Table 18. Operating conditions at power-up/power-down

Symbol	Parameter	Min	Max	Unit
t_{VDD}	V_{DD} rise time rate	0	∞	µs/V
	V_{DD} fall time rate	10	∞	
t_{VDDA}	V_{DDA} rise time rate	0	∞	
	V_{DDA} fall time rate	10	∞	
t_{VDDUSB}	V_{DDUSB} rise time rate	0	∞	
	V_{DDUSB} fall time rate	10	∞	
t_{VCORE}(1)	V_{CORE} rise time rate(2)	0	285	
	V_{CORE} fall time rate	10	∞	

1. t_{VCORE} should be achieved when V_{CORE} is provided by an external supply voltage (bypass with VDDLDO = V_{CORE}).
2. V_{CORE} rising slope must respect the above constraints. There are no constraints on the delay between V_{DD} rising and V_{CORE} rising.

6.3.5 Embedded reset and power control block characteristics

The parameters given in *Table 19* are derived from tests performed under ambient temperature and V_{DD} supply voltage conditions summarized in *Table 12: General operating conditions*.

Table 19. Reset and power control block characteristics

Symbol	Parameter	Conditions	Min	Typ	Max	Unit
$t_{RSTTEMPO}$(1)	Reset temporization after BOR0 released	-	-	377	550	µs
$V_{BOR0/POR/PDR}$	Power-on/power-down reset threshold	Rising edge(1)	1.62	1.67	1.71	V
		Falling edge	1.58	1.62	1.68	
V_{BOR1}	Brown-out reset threshold 1	Rising edge	2.04	2.10	2.15	
		Falling edge	1.95	2.00	2.06	
V_{BOR2}	Brown-out reset threshold 2	Rising edge	2.34	2.41	2.47	
		Falling edge	2.25	2.31	2.37	
V_{BOR3}	Brown-out reset threshold 3	Rising edge	2.63	2.70	2.78	
		Falling edge	2.54	2.61	2.68	
V_{PVD0}	Programmable Voltage Detector threshold 0	Rising edge	1.90	1.96	2.01	
		Falling edge	1.81	1.86	1.91	
V_{PVD1}	Programmable Voltage Detector threshold 1	Rising edge	2.05	2.10	2.16	
		Falling edge	1.96	2.01	2.06	
V_{PVD2}	Programmable Voltage Detector threshold 2	Rising edge	2.19	2.26	2.32	
		Falling edge	2.10	2.15	2.21	
V_{PVD3}	Programmable Voltage Detector threshold 3	Rising edge	2.35	2.41	2.47	
		Falling edge	2.25	2.31	2.37	
V_{PVD4}	Programmable Voltage Detector threshold 4	Rising edge	2.49	2.56	2.62	
		Falling edge	2.39	2.45	2.51	
V_{PVD5}	Programmable Voltage Detector threshold 5	Rising edge	2.64	2.71	2.78	
		Falling edge	2.55	2.61	2.68	
V_{PVD6}	Programmable Voltage Detector threshold 6	Rising edge	2.78	2.86	2.94	
		Falling edge in Run mode	2.69	2.76	2.83	
$V_{hyst_POR_PDR}$	Hysteresis voltage for Power-on/power-down reset (including BOR0)	Hysteresis in Run mode	-	43.00	-	mV
$V_{hyst_BOR_PVD}$	Hysteresis voltage for BOR (except BOR0)	Hysteresis in Run mode	-	100	-	
$I_{DD_BOR_PVD}$(1)	BOR and PVD consumption from V_{DD}	-	-	-	0.630	µA
$I_{DD_POR_PVD}$	POR and PVD consumption from V_{DD}	-	0.8	-	1.200	

Table 19. Reset and power control block characteristics (continued)

Symbol	Parameter	Conditions	Min	Typ	Max	Unit
V_{AVM_0}	Analog voltage detector for V_{DDA} threshold 0	Rising edge	1.66	1.71	1.76	V
		Falling edge	1.56	1.61	1.66	
V_{AVM_1}	Analog voltage detector for V_{DDA} threshold 1	Rising edge	2.06	2.12	2.19	
		Falling edge	1.96	2.02	2.08	
V_{AVM_2}	Analog voltage detector for V_{DDA} threshold 2	Rising edge	2.42	2.50	2.58	
		Falling edge	2.35	2.42	2.49	
V_{AVM_3}	Analog voltage detector for V_{DDA} threshold 3	Rising edge	2.74	2.83	2.91	
		Falling edge	2.64	2.72	2.80	
V_{hyst_VDDA}	Hysteresis of V_{DDA} voltage detector	-	-	100	-	mV
I_{DD_PVM}	PVM consumption from V_{DD}(1)	-	-	-	0.25	µA
I_{DD_VDDA}	Voltage detector consumption on V_{DDA}(1)	Resistor bridge	-	-	2.5	µA

1. Guaranteed by design.

6.3.6 Embedded reference voltage characteristics

The parameters given in *Table 20* are derived from tests performed under ambient temperature and V_{DD} supply voltage conditions summarized in *Table 12: General operating conditions*.

Table 20. Embedded reference voltage

Symbol	Parameter	Conditions	Min	Typ	Max	Unit
V_{REFINT}	Internal reference voltages	-40°C < T_J < T_{Jmax}	1.180	1.216	1.255	V
$t_{S_vrefint}$(1)(2)(3)	ADC sampling time when reading the internal reference voltage	-	4.3	-	-	µs
t_{S_vbat}(2)	VBAT sampling time when reading the internal VBAT reference voltage	-	9	-	-	
$t_{start_vrefint}$(2)	Start time of reference voltage buffer when ADC is enable	-	-	-	4.4	
I_{refbuf}(2)	Reference Buffer consumption for ADC	V_{DD} = 3.3 V	9	13.5	23	µA
ΔV_{REFINT}(2)	Internal reference voltage spread over the temperature range	-40°C < T_J < T_{Jmax}	-	5	15	mV
T_{coeff}(2)	Average temperature coefficient	Average temperature coefficient	-	20	70	ppm/°C
$V_{DDcoeff}$(2)	Average Voltage coefficient	3.0 V < V_{DD} < 3.6 V	-	10	1370	ppm/V

Table 20. Embedded reference voltage (continued)

Symbol	Parameter	Conditions	Min	Typ	Max	Unit
V_{REFINT_DIV1}	1/4 reference voltage	-	-	25	-	% V_{REFINT}
V_{REFINT_DIV2}	1/2 reference voltage	-	-	50	-	
V_{REFINT_DIV3}	3/4 reference voltage	-	-	75	-	

1. The shortest sampling time for the application can be determined by multiple iterations.
2. Guaranteed by design.
3. Guaranteed by design. and tested in production at 3.3 V.

Table 21. Internal reference voltage calibration values

Symbol	Parameter	Memory address
V_{REFIN_CAL}	Raw data acquired at temperature of 30 °C, V_{DDA} = 3.3 V	1FF1 E860 - 1FF1 E861

6.3.7 Embedded USB regulator characteristics

The parameters given in *Table 22* are derived from tests performed under ambient temperature and V_{DD} supply voltage conditions summarized in *Table 12: General operating conditions*.

Table 22. USB regulator characteristics

Symbol	Parameter	Conditions	Min	Typ	Max	Unit
$V_{DD50USB}$	Supply voltage	-	4	5	5.5	V
$I_{DD50USB}$	Current consumption	-	-	14	-	µA
$V_{REGOUTV33V}$	Regulated output voltage	-	3	-	3.6	V
I_{OUT}	Output current load sinked by USB block	-	-	-	20	mA
T_{WKUP}	Wakeup time	-	-	120	170	us

6.3.8 Supply current characteristics

The current consumption is a function of several parameters and factors such as the operating voltage, ambient temperature, I/O pin loading, device software configuration, operating frequencies, I/O pin switching rate, program location in memory and executed binary code.

The current consumption is measured as described in *Figure 14: Current consumption measurement scheme*.

All the Run-mode current consumption measurements given in this section are performed with a CoreMark code.

Typical and maximum current consumption

The MCU is placed under the following conditions:

- All I/O pins are in analog input mode.
- All peripherals are disabled except when explicitly mentioned.
- The flash memory access time is adjusted with the minimum wait states number, depending on the f_{ACLK} frequency (refer to the table “Number of wait states according to CPU clock ($f_{rcc_c_ck}$) frequency and V_{CORE} range” available in the reference manual).
- When the peripherals are enabled, the AHB clock frequency is the CPU frequency divided by 2 and the APB clock frequency is AHB clock frequency divided by 2.
- For typical values, the power supply is 3 V unless otherwise specified.

The parameters given in the below tables are derived from tests performed at supply voltage conditions summarized in *Table 12: General operating conditions*, and at ambient temperature unless otherwise specified.

Table 23. Typical and maximum current consumption in Run mode, code with data processing running from ITCM(1)

Symbol	Parameter	Conditions		$f_{rcc_c_ck}$ (MHz)	Typ LDO regulator ON	Typ SMPS ON	Max LDO regulator ON(2)				Max SMPS ON(3)	Unit
							T_J = 25 °C	T_J = 85 °C	T_J = 105 °C	T_J = 125 °C	T_J = 140 °C	
I_{DD}	Supply current in Run mode	All peripherals disabled	VOS0 (4)	550	145	81	170	260	330	-	-	mA
				520	135	76	160	260	320	-	-	
			VOS0	520	135	76	160	260	320	-	-	
				480	125	72.5	150	250	310	-	-	
				450	115	67.5	150	240	300	-	-	
				400	105	60	130	230	290	-	-	
			VOS1	400	90.5	47	110	170	220	280	160	
				300	69.5	36.5	84	150	200	260	150	
			VOS2	300	63	31.5	74	130	170	220	110	
				280	58	29	69	120	160	210	110	
				216	45.5	22.5	56	110	150	200	110	
				200	42	21	53	110	140	200	110	
			VOS3	170	32.5	15	40	80	110	160	74	
				168	32	15	40	79	110	160	74	
				144	28	13.5	36	75	110	150	74	
				60	13.5	6.7	21	61	90	140	67	
				25	6.9	3.6	14	54	83	130	67	
		All peripherals enabled	VOS0 (4)	550	215	125	250	360	430	-	-	
				520	205	120	240	350	420	-	-	
			VOS0	520	205	120	240	350	420	-	-	
				400	160	92.5	190	300	370	-	-	
			VOS1	400	135	72	160	230	290	360	200	
				300	105	54.5	130	200	250	330	180	
			VOS2	300	95	46.5	110	170	210	280	140	
				280	88	43	100	160	210	270	140	
			VOS3	170	49	22.5	58	110	140	190	93	

1. Data are in DTCM for best computation performance, the cache has no influence on consumption in this case.
2. Guaranteed by characterization results, unless otherwise specified. Refer to *Section 6.3.3: SMPS step-down converter* for the SMPS maximum consumption.
3. The parameter values given in the above table for the SMPS regulator are extrapolated from the LDO consumption and typical SMPS efficiency factors.
4. CPU_FREQ_BOOST is enabled.

Table 24. Typical and maximum current consumption in Run mode, code with data processing running from flash memory, cache ON(1)

Symbol	Parameter	Conditions		$f_{rcc_c_ck}$ (MHz)	Typ LDO regulator ON	Typ SMPS ON	Max LDO regulator ON(2)				Max SMPS ON(3)	Unit
							T_J = 25 °C	T_J = 85 °C	T_J = 105 °C	T_J = 125 °C	T_J = 140 °C	
I_{DD}	Supply current in Run mode	All peripherals disabled	VOS0 (4)	550	145	83.5	170	270	330	-	-	mA
				520	140	78.5	170	260	320	-	-	
			VOS0	520	140	78.5	170	260	320	-	-	
				400	110	62	140	230	290	-	-	
			VOS1	400	92	48.5	110	180	220	290	160	
				300	71	37.5	86	150	200	260	150	
			VOS2	300	64	32	75	130	170	220	110	
				280	59	29.5	70	120	160	210	110	
				216	46.5	23	-	-	-	-	-	
				200	42.5	21.5	53	110	140	200	110	
				180	36	17	43	83	120	160	85	
			VOS3	170	33.5	15.5	41	81	110	160	74	
				168	33	15.5	-	-	-	-	-	
				144	29	13.5	-	-	-	-	-	
				60	14	6.85	-	-	-	-	-	
				25	6.85	3.7	-	-	-	-	-	
		All peripherals enabled	VOS0 (4)	550	220	130	250	360	430	-	-	
				520	210	120	240	350	420	-	-	
			VOS0	520	210	120	240	350	420	-	-	
				400	160	94.5	190	300	370	-	-	
			VOS1	400	140	73	160	240	290	360	200	
				300	105	55.5	130	200	250	330	180	
			VOS2	300	96	47	110	170	210	280	140	
				280	89	43.5	110	160	210	270	140	
			VOS3	170	50	23	59	110	140	190	93	

1. Data are in DTCM for best computation performance, the cache has no influence on consumption in this case.
2. Guaranteed by characterization results, unless otherwise specified. Refer to *Section 6.3.3: SMPS step-down converter* for the SMPS maximum consumption.
3. The parameter values given in the above table for the SMPS regulator are extrapolated from the LDO consumption and typical SMPS efficiency factors.
4. CPU_FREQ_BOOST is enabled.

Table 25. Typical and maximum current consumption in Run mode, code with data processing running from flash memory, cache OFF(1)

Symbol	Parameter	Conditions		$f_{rcc_c_ck}$ (MHz)	Typ LDO regulator ON	Typ SMPS ON	Unit
I_{DD}	Supply current in Run mode	All peripherals disabled	VOS0(2)	550	99	59.5	mA
				520	95	56	
			VOS0	520	95	56	
				400	76.5	47	
			VOS1	400	66.5	38	
				300	51.5	30	
			VOS2	300	47.5	26	
				280	43.5	24	
			VOS3	170	24.5	13	
		All peripherals enabled	VOS0(2)	550	170	100	
				520	165	95.5	
			VOS0	520	165	95.5	
				400	130	77.5	
			VOS1	400	115	62	
				300	87	47.5	
			VOS2	300	79	41.5	
				280	73.5	38	
			VOS3	170	41	20.5	

1. Data are in DTCM for best computation performance, the cache has no influence on consumption in this case.
2. CPU_FREQ_BOOST is enabled.

Table 26. Typical consumption in Run mode and corresponding performance versus code position

Symbol	Parameter	Conditions		$f_{rcc_c_ck}$ (MHz)	Coremark	Typ LDO regulator ON	Typ SMPS ON	Unit	LDO I_{DD}/ Coremark	SMPS I_{DD}/ Coremark	Unit
		Peripheral	Code								
I_{DD}	Supply current in Run mode	All peripherals disabled, cache ON	ITCM	550	2777	145	81	mA	52.2	29.2	µA/ Core-mark
			FLASH	550	2777	145	83.5		52.2	30.1	
			AXI SRAM	550	2777	145	83.5		52.2	30.1	
			SRAM 1	550	2777	150	86		54.0	31.0	
			SRAM 4	550	2777	145	83.5		52.2	30.1	
		All peripherals disabled cache OFF	FLASH	550	923	99	59.5		107.3	64.5	
			AXI SRAM	550	1271	105	60.5		82.6	47.6	
			SRAM 1	550	790	96.5	54.5		122.2	69.0	
			SRAM 4	550	723	89.5	50.5		123.8	69.8	

Table 27. Typical current consumption in Autonomous mode

Symbol	Parameter	Conditions		$f_{rcc_c_ck}$ (MHz)	Typ LDO regulator ON	Typ SMPS ON	Unit
I_{DD}	Supply current in Autonous mode	Run, D1Stop, D2Stop	VOS3	64	3.6	2.2	mA
		Run, D1Standby, D2Standby	VOS3	64	2.6	1.6	

Table 28. Typical and maximum current consumption in Sleep mode

Symbol	Parameter	Conditions		$f_{rcc_c_ck}$ (MHz)	Typ LDO regulator ON	Typ SMPS ON	Max LDO regulator ON(1)(2)				Max SMPS ON(3)	Unit
							T_J = 25 °C	T_J = 85 °C	T_J = 105 °C	T_J = 125 °C	T_J = 140 °C	
$I_{DD(Sleep)}$	Supply current in Sleep mode	All peripherals disabled	VOS0 (4)	550	36	20.5	-	-	-	-	-	mA
				520	33.5	19.5	60	170	240	-	-	
			VOS0	520	33.5	19.5	60	170	240	-	-	
				400	27	16	52	160	230	-	-	
			VOS1	400	22.5	12.5	39	110	170	240	140	
				300	18.5	10.5	34	110	160	240	140	
			VOS2	300	16.5	8.75	28	85	130	190	110	
				170	9.7	5.2	21	78	120	190	110	
			VOS3	170	8.5	4.35	17	61	96	150	74	

1. Guaranteed by characterization results.
2. Refer to *Section 6.3.3: SMPS step-down converter* for the SMPS maximum consumption.
3. The parameter values given in the above table for the SMPS regulator are extrapolated from the LDO consumption and typical SMPS efficiency factors.
4. CPU_FREQ_BOOST is enabled.

Table 29. Typical and maximum current consumption in System Stop mode

Symbol	Parameter	Conditions		Typ LDO regulator ON	Typ SMPS ON(3)	Max LDO regulator ON(1)(2)				Max SMPS ON(3)	Unit
						T_J = 25 °C	T_J = 85 °C	T_J = 105 °C	T_J = 125 °C	T_J = 140 °C	
$I_{DD(Stop)}$	D1, D2 and D3 domains in DStop mode	Flash memory in low-power mode	SVOS5	0.52	0.2	3.7	26.0	44.0	72.0	50.0	mA
			SVOS4	0.81	0.34	6.1	39.0	64.0	110.0	70.0	
			SVOS3	1.15	0.51	8.6	51.0	83.0	130.0	100.0	
		Flash memory in normal mode, IWDG OFF	SVOS5	0.535	0.2	3.7	26.0	44.0	72.0	50.0	
			SVOS4	0.96	0.4	6.2	39.0	64.0	110.0	75.0	
			SVOS3	1.45	0.65	8.8	51.0	83.0	130.0	100.0	
	D1 and D3 domains in DStop mode, D2 domain in DStandby mode	Flash memory in low-power mode, IWDG OFF	SVOS5	0.48	0.19	3.3	23.0	39.0	63.0	43.0	
			SVOS4	0.73	0.31	5.4	34.0	56.0	88.0	58.0	
			SVOS3	1	0.46	7.7	45.0	72.0	120.0	71.0	
		Flash memory in normal mode, IWDG OFF	SVOS5	0.46	0.18	3.3	23.0	39.0	63.0	43.0	
			SVOS4	0.9	0.38	5.6	34.0	56.0	89.0	58.0	
			SVOS3	1.17	0.52	7.8	45.0	72.0	120.0	71.0	
	D1 domain in DStandby mode, D2 and D3 domains in DStop mode	Flash memory in low-power mode, IWDG OFF	SVOS5	0.15	0.069	0.8	5.4	9.2	16.0	9.8	
			SVOS4	0.21	0.098	1.3	7.9	14.0	22.0	14.0	
			SVOS3	0.275	0.15	1.8	11.0	18.0	28.0	17.0	
	D1 and D2 domains in DStandby mode, D3 domain in DStop mode		SVOS5	0.095	0.055	0.3	2.1	3.6	5.9	3.8	
			SVOS4	0.12	0.064	0.5	3.2	5.2	8.3	5.1	
			SVOS3	0.15	0.084	0.8	4.2	6.8	11.0	6.3	

1. Guaranteed by characterization results.
2. Refer to *Section 6.3.3: SMPS step-down converter* for the SMPS maximum consumption.
3. The parameter values given in the above table for the SMPS regulator are extrapolated from the LDO consumption and typical SMPS efficiency factors.

Table 30. Typical and maximum current consumption in Standby mode

Symbol	Parameter	Conditions		Typ(1)				Max at 3.6 V with LDO regulator ON(2)				Max at 3.6 V with SMPS ON(3)	Unit
		Backup SRAM	RTC and LSE(4)	1.65 V	2.4 V	3 V	3.3 V	T_J = 25 °C	T_J = 85 °C	T_J = 105 °C	T_J = 125 °C	T_J = 140 °C	
I_{DD} (Standby)	Supply current in Standby mode, IWDG OFF	OFF	OFF	2.2	2.35	2.5	2.8	-	-	-	-	-	µA
		ON	OFF	3.5	3.7	4	4.3	-	-	-	-	-	
		OFF	ON	2.2	2.4	2.85	3.25	4.5	15	30	64	96	
		ON	ON	3.5	3.8	4.35	4.75	8.3	39	75	140	180	

1. These values are given for PDR OFF. When the PDR is ON, the typical current consumption is increased (refer to *Table 19: Reset and power control block characteristics*.
2. Guaranteed by characterization results.
3. The parameter values given in the above table for the SMPS regulator are extrapolated from the LDO consumption and typical SMPS efficiency factors.
4. The LSE is in Low-drive mode.

Table 31. Typical and maximum current consumption in V_{BAT} mode

Sym-bol	Para-meter	Conditions		Typ				Max at 3.6 V with LDO regulator ON(1)(2)				Max at 3.6 V with SMPS ON(1)(2)	Unit
		Back-up SRAM	RTC and LSE(3)	1.2 V	2 V	3 V	3.3 V	T_J = 25 °C	T_J = 85 °C	T_J = 105 °C	T_J = 125 °C	T_J = 140 °C	
I_{DD} (VBAT)	Supply current in VBAT mode	OFF	OFF	0.008	0.01	0.025	0.05	0.3	3.1	7.4	18	34	µA
		ON	OFF	1.5	1.7	1.9	1.9	4	28	53	91	110	
		OFF	ON	0.4	0.5	0.75	0.8	-	-	-	-	-	
		ON	ON	1.8	2.1	2.8	3.2	-	-	-	-	-	

1. Guaranteed by characterization results.
2. The LDO regulator is used before switching to V_{BAT} mode.
3. The LSE is in Low-drive mode.

Typical SMPS efficiency versus load current and temperature

Figure 17. Typical SMPS efficiency (%) vs load current (A) in Run mode at T_J = 30 °C

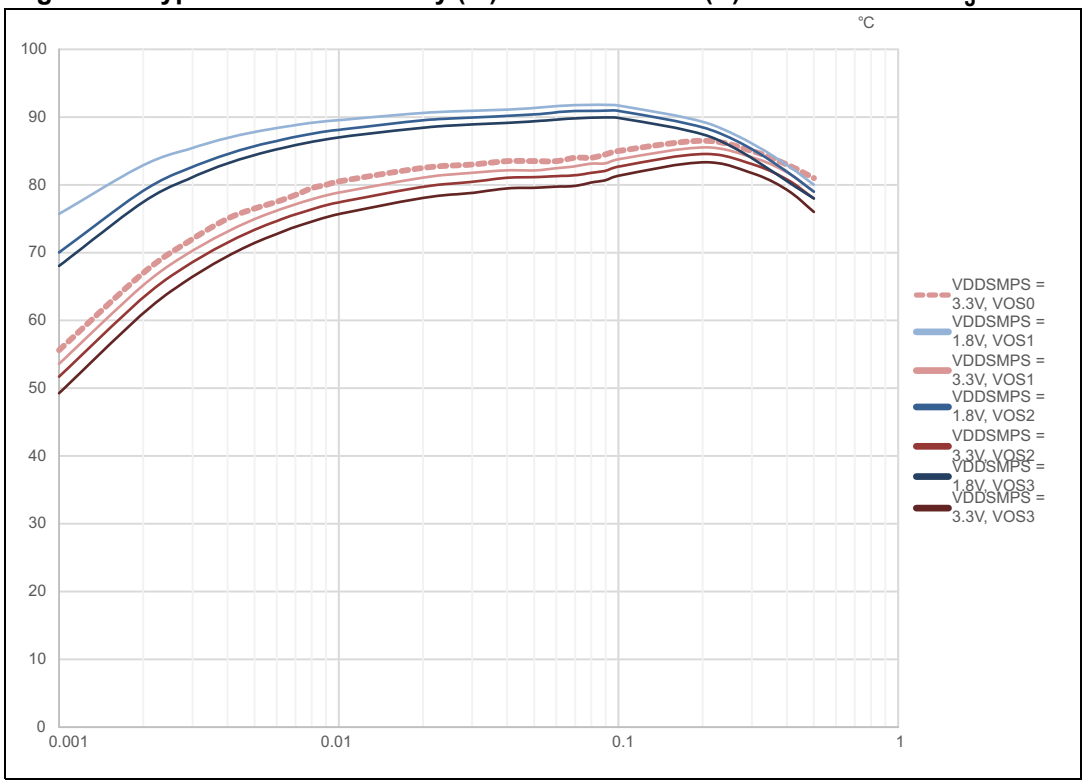

Figure 18. Typical SMPS efficiency (%) vs load current (A) in Run mode at $T_J = T_{Jmax}$

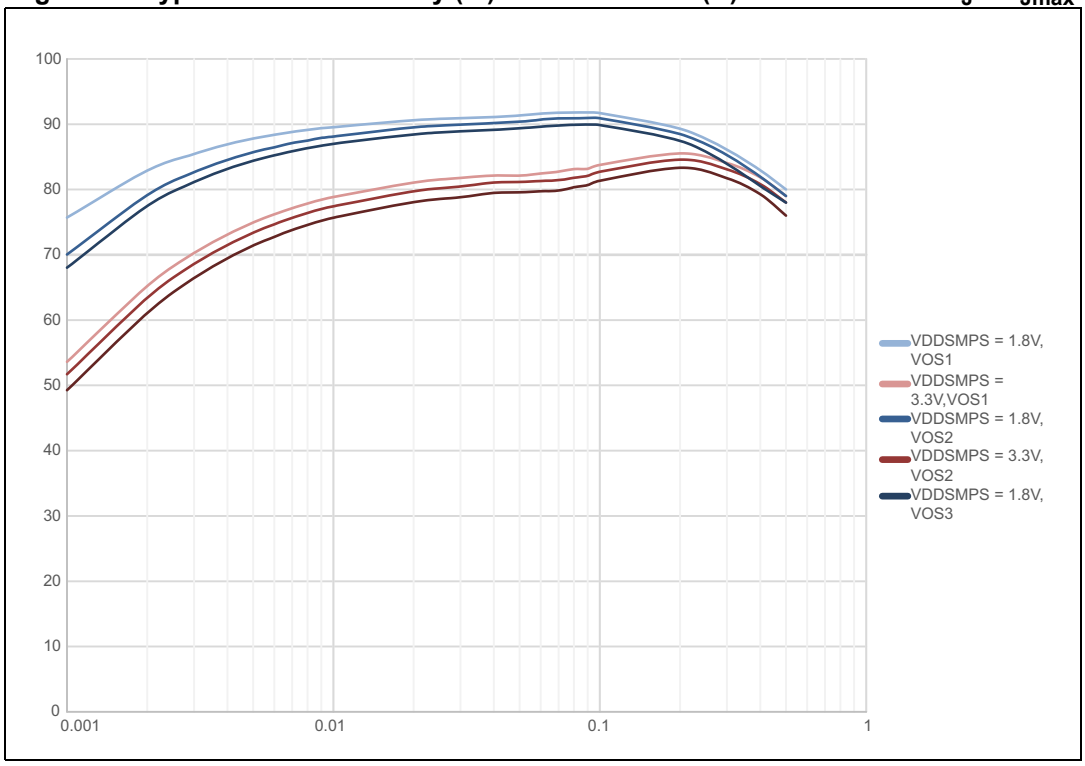

Figure 19. Typical SMPS efficiency (%) vs load current (A) in Stop and DStop modes at T_J = 30 °C

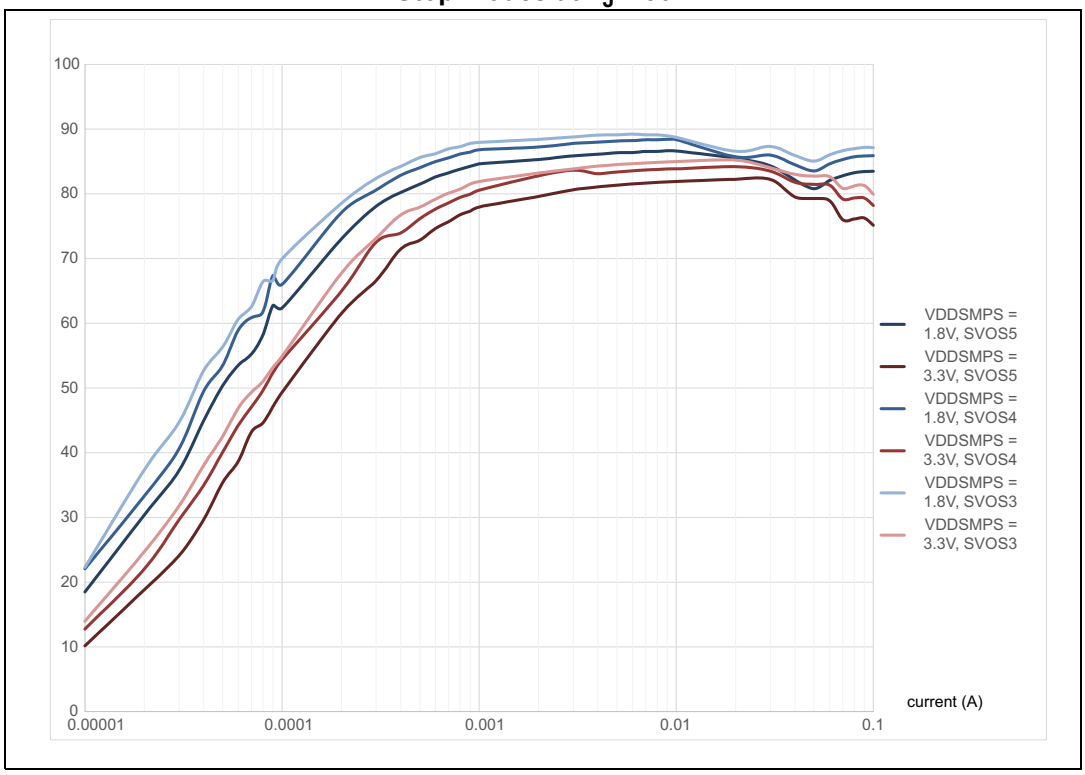

Figure 20. Typical SMPS efficiency (%) vs load current (A) in low-power mode at $T_J = T_{Jmax}$

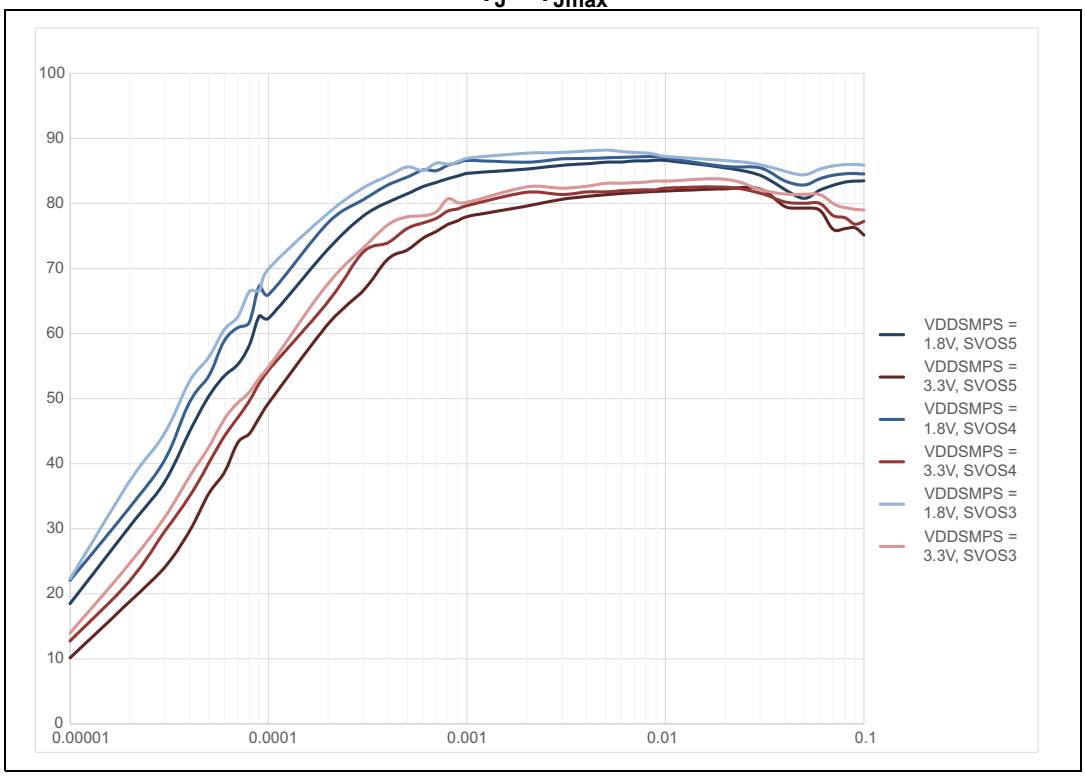

I/O system current consumption

The current consumption of the I/O system has two components: static and dynamic.

I/O static current consumption

All the I/Os used as input with pull-up or pull-down generate a current consumption when the pin is externally held to the opposite level.

The value of this current consumption can be simply computed by using the pull-up/pull-down resistors values given in *Table 54: I/O static characteristics*.

For the output pins, any internal or external pull-up or pull-down and external load must also be considered to estimate the current consumption.

An additional I/O current consumption is due to I/Os configured as inputs if an intermediate voltage level is externally applied. This current consumption is caused by the input Schmitt trigger circuits used to discriminate the input value. Unless this specific configuration is required by the application, this supply current consumption can be avoided by configuring these I/Os in analog mode. This is notably the case of ADC input pins which should be configured as analog inputs.

Caution: Any floating input pin can also settle to an intermediate voltage level or switch inadvertently, as a result of external electromagnetic noise. To avoid a current consumption related to floating pins, they must either be configured in analog mode, or forced internally to a definite digital value. This can be done either by using pull-up/down resistors or by configuring the pins in output mode.

I/O dynamic current consumption

In addition to the internal peripheral current consumption (see *Table 32: Peripheral current consumption in Run mode*), the I/Os used by an application also contribute to the current consumption. When an I/O pin switches, it uses the current from the MCU supply voltage to supply the I/O pin circuitry and to charge/discharge the capacitive load (internal and external) connected to the pin:

$$I_{SW} = V_{DDx} \times f_{SW} \times C_L$$

where

I_{SW} is the current sunk by a switching I/O to charge/discharge the capacitive load

V_{DDx} is the MCU supply voltage

f_{SW} is the I/O switching frequency

C_L is the total capacitance seen by the I/O pin: $C = C_{INT} + C_{EXT}$

The test pin is configured in push-pull output mode and is toggled by software at a fixed frequency.

On-chip peripheral current consumption

The MCU is placed under the following conditions:

- At startup, all I/O pins are in analog input configuration.
- All peripherals are disabled unless otherwise mentioned.
- The I/O compensation cell is enabled.
- $f_{rcc_c_ck}$ is the CPU clock. $f_{PCLK} = f_{rcc_c_ck}/4$, and $f_{HCLK} = f_{rcc_c_ck}/2$.
  The given value is calculated by measuring the difference of current consumption
  - with all peripherals clocked off
  - with only one peripheral clocked on
  - $f_{rcc_c_ck}$ = 550 MHz (Scale 0), $f_{rcc_c_ck}$ = 400 MHz (Scale 1), $f_{rcc_c_ck}$ = 300 MHz (Scale 2), $f_{rcc_c_ck}$ = 170 MHz (Scale 3)
- The ambient operating temperature is 25 °C and V_{DD}=3.3 V
- The LDO regulator supplies V_{CORE}.

Table 32. Peripheral current consumption in Run mode

Peripheral		$I_{DD(Typ)}$				Unit
		VOS0	VOS1	VOS2	VOS3	
AHB3	MDMA	3.70	3.10	2.90	2.60	µA/MHz
	DMA2D	2.70	2.30	2.10	1.90	
	Flash memory	15.20	14.00	12.00	10.90	
	FMC registers	0.90	0.90	0.80	0.70	
	FMC kernel	7.00	6.10	5.60	5.40	
	OCTOSPI1 registers	1.40	1.30	0.50	0.40	
	OCTOSPI1 kernel	3.10	1.20	0.50	0.20	
	SDMMC1 registers	8.70	7.60	6.90	6.10	
	SDMMC1 kernel	2.10	1.80	1.40	1.20	
	OCTOSPI2 registers	1.40	1.30	0.90	0.60	
	OCTOSPI2 kernel	2.50	1.50	1.40	0.50	
	OTFDEC1	0.80	0.70	0.10	0.10	
	OTFDEC2	0.80	0.70	0.10	0.10	
	AXI SRAM	8.50	7.50	6.90	6.00	

Table 32. Peripheral current consumption in Run mode (continued)

Peripheral		$I_{DD(Typ)}$				Unit
		VOS0	VOS1	VOS2	VOS3	
AHB1	DMA1	0.70	0.60	0.50	0.40	µA/MHz
	DMA2	1.00	0.80	0.70	0.70	
	DMAMUX1	0.10	0.10	0.10	0.10	
	ADC1/2 registers	4.50	4.00	3.60	2.30	
	ADC1/2 kernel	0.90	0.80	0.60	0.40	
	USB1 registers	20.80	17.50	16.50	14.80	
	USB1 kernel	1.20	0.90	0.90	0.90	
	USB1 ULPI kernel	31.00	30.00	29.50	27.00	
	Ethernet	17.30	14.40	13.70	12.30	
AHB2	DCMI	4.80	4.00	3.80	3.40	µA/MHz
	CRYP	1.40	1.20	1.10	0.80	
	HASH1	1.70	1.40	1.30	1.00	
	HSEM	0.60	0.60	0.10	0.10	
	RNG1 registers	1.20	1.00	0.90	0.70	
	RNG1 kernel	15.00	13.60	10.00	9.00	
	SDMMC2 registers	15.00	12.20	11.70	10.40	
	SDMMC2 kernel	2.10	1.80	1.40	1.20	
	BDMA	6.50	5.90	4.80	4.30	
	SRAM1	2.40	2.00	1.80	1.60	
	SRAM2	2.70	2.30	2.00	1.80	
	CORDIC	0.80	0.60	0.50	0.50	
	FMAC	2.40	2.10	1.90	1.60	

Table 32. Peripheral current consumption in Run mode (continued)

Peripheral		$I_{DD(Typ)}$				Unit
		VOS0	VOS1	VOS2	VOS3	
AHB4	GPIOA	0.10	0.10	0.10	0.10	µA/MHz
	GPIOB	0.90	0.80	0.10	0.10	
	GPIOC	0.50	0.10	0.10	0.10	
	GPIOD	0.90	0.80	0.10	0.10	
	GPIOE	0.90	0.80	0.10	0.10	
	GPIOF	0.30	0.10	0.10	0.10	
	GPIOG	0.90	0.80	0.30	0.20	
	GPIOH	0.10	0.10	0.10	0.10	
	GPIOJ	0.90	0.80	0.30	0.20	
	GPIOK	0.80	0.80	0.10	0.10	
	HSEM	0.60	0.60	0.10	0.10	
	BDMA	6.50	5.90	4.80	4.30	
	CRC	0.90	0.30	0.30	0.30	
	ADC3 registers	2.10	1.40	1.30	1.20	
	ADC3 kernel	0.40	0.30	0.30	0.20	
	Backup SRAM	1.80	1.00	1.00	0.80	
APB3	LTDC	9.00	7.90	7.70	6.40	
	WWDG1	0.60	0.50	0.50	0.50	

Table 32. Peripheral current consumption in Run mode (continued)

Peripheral		$I_{DD(Typ)}$				Unit
		VOS0	VOS1	VOS2	VOS3	
APB1	TIM2	4.50	4.40	3.30	3.00	µA/MHz
	TIM3	3.80	3.20	2.90	2.70	
	TIM4	3.60	3.10	2.60	2.50	
	TIM5	4.10	3.40	3.10	2.90	
	TIM6	1.50	1.10	1.00	1.00	
	TIM7	1.40	1.10	0.90	0.90	
	TIM12	2.30	1.80	1.60	1.60	
	TIM13	1.90	1.40	1.30	1.20	
	TIM14	1.60	1.20	1.10	1.10	
	TIM23	4.60	3.90	3.60	3.40	
	TIM24	4.40	3.80	3.50	3.30	
	LPTIM1 registers	3.50	2.90	2.70	2.60	
	LPTIM1 kernel	2.60	2.30	2.00	1.80	
	SPI2 registers	2.10	1.60	0.90	0.80	
	SPI2 kernel	1.50	1.20	1.10	1.00	
	SPI3 registers	2.40	2.00	1.90	1.80	
	SPDIFRX registers	0.60	0.50	0.50	0.50	
	SPDIFRX kernel	3.50	2.80	2.40	2.20	
	USART2 registers	6.60	5.70	5.20	4.90	
	USART2 kernel	4.80	4.80	4.60	3.80	
	USART3 registers	5.90	5.40	4.60	4.30	
	USART3 kernel	4.00	3.40	3.00	2.90	
	UART4 registers	5.60	4.80	3.50	3.10	
	UART4 kernel	3.80	3.20	3.00	2.40	
	UART5 registers	5.60	4.60	4.40	4.00	
	UART5 kernel	3.90	3.40	3.30	3.20	
	UART7 registers	5.40	4.60	4.20	3.90	
	UART7 kernel	3.80	3.30	3.00	3.00	
	UART8 registers	5.60	4.10	3.50	3.40	
	UART8 kernel	3.60	3.20	3.20	3.10	
	I2C1 registers	0.90	0.60	0.60	0.50	
	I2C1 kernel	2.30	2.00	1.80	1.60	
	I2C2 registers	1.00	0.70	0.60	0.60	

Table 32. Peripheral current consumption in Run mode (continued)

Peripheral		$I_{DD(Typ)}$				Unit
		VOS0	VOS1	VOS2	VOS3	
APB1	I2C2 kernel	2.30	1.90	1.70	1.20	µA/MHz
	I2C3 registers	0.90	0.60	0.50	0.50	
	I2C3 kernel	2.30	2.00	1.00	1.00	
	I2C5 registers	0.90	0.60	0.50	0.50	
	I2C5 kernel	2.20	2.10	1.90	1.80	
	CEC registers	0.60	0.30	0.20	0.20	
	CEC kernel	0.10	0.10	0.10	0.10	
	DAC1	1.60	1.30	1.10	1.10	
	FDCAN1/2/3 registers	24.10	20.90	18.20	17.40	
	FDCAN1/2/3 kernel	9.90	9.90	9.00	8.00	
	CRS	4.90	3.90	3.50	3.20	
	SWPMI registers	1.10	0.80	0.80	0.80	
	SWPMI kernel	1.50	1.10	1.00	1.00	
	OPAMP	0.50	0.40	0.30	0.20	

Table 32. Peripheral current consumption in Run mode (continued)

Peripheral		$I_{DD(Typ)}$				Unit
		VOS0	VOS1	VOS2	VOS3	
APB2	TIM1	5.30	4.40	4.20	3.80	µA/MHz
	TIM8	5.60	5.40	5.20	3.90	
	USART1 registers	1.80	1.60	1.40	1.10	
	USART1 kernel	3.00	2.90	2.80	2.70	
	USART6 registers	1.90	1.70	1.50	1.20	
	USART6 kernel	4.50	4.00	3.60	3.10	
	UART9 registers	1.70	1.70	1.60	1.10	
	UART9 kernel	3.80	3.30	2.90	2.90	
	USART10 registers	1.80	1.70	1.40	1.10	
	USART10 kernel	3.80	3.30	2.90	2.90	
	SPI1 registers	1.90	1.80	1.40	1.20	
	SPI1 kernel	1.50	1.20	1.10	1.00	
	SPI4 registers	1.80	1.60	1.40	1.10	
	SPI4 kernel	1.50	1.20	1.10	1.00	
	SPI5 registers	1.60	1.60	1.40	1.10	
	SPI5 kernel	1.50	1.20	1.10	1.00	
	TIM15	2.80	2.50	2.30	1.90	
	TIM16	2.00	1.90	1.60	1.30	
	TIM17	2.10	2.00	1.70	1.40	
	SAI1 registers	1.40	1.40	1.20	0.90	
	SAI1 kernel	0.80	0.70	0.70	0.70	
	DFSDM1 registers	5.60	5.40	5.30	4.00	
	DFSDM1 kernel	0.30	0.20	0.20	0.10	
	SYSCFG	1.20	1.10	1.10	1.10	

Table 32. Peripheral current consumption in Run mode (continued)

Peripheral		$I_{DD(Typ)}$				Unit
		VOS0	VOS1	VOS2	VOS3	
APB4	LPUART1 registers	1.80	0.90	0.80	0.60	µA/MHz
	LPUART1 kernel	2.40	2.30	2.00	1.90	
	SPI6 registers	2.60	2.30	2.10	1.80	
	SPI6 kernel	1.20	1.10	1.00	0.90	
	I2C4 registers	0.70	0.70	0.60	0.40	
	I2C4 kernel	2.00	1.70	1.70	1.40	
	LPTIM2 registers	1.50	0.70	0.50	0.30	
	LPTIM2 kernel	2.50	2.10	2.00	1.90	
	LPTIM3 registers	2.90	2.60	2.30	1.90	
	LPTIM3 kernel	2.40	2.00	1.90	1.70	
	LPTIM4 registers	2.60	2.30	2.10	1.80	
	LPTIM4 kernel	2.10	1.80	1.70	1.60	
	LPTIM5 registers	2.60	2.30	2.00	1.70	
	LPTIM5 kernel	2.10	1.80	1.60	1.50	
	COMP1/2	0.70	0.30	0.20	0.10	
	VREF	0.10	0.10	0.10	0.10	
	RTC	0.10	0.10	0.10	0.10	
	WWDG1	0.60	0.50	0.50	0.50	
	SAI4 registers	2.40	2.20	2.10	1.70	
	SAI4 kernel	0.90	0.90	0.90	0.70	
	DTS	2.90	2.60	2.30	2.00	

6.3.9 Wake-up time from low-power modes

The wake-up times given in *Table 33* are measured starting from the wake-up event trigger up to the first instruction executed by the CPU:

- For Stop or Sleep modes: the wake-up event is WFE.
- WKUP (PC1) pin is used to wake-up from Standby, Stop and Sleep modes.

All timings are derived from tests performed under ambient temperature and V_{DD}=3.3 V.

Table 33. Low-power mode wakeup timings

Symbol	Parameter	Conditions	Typ(1)	Max(1)(2)	Unit
$t_{WUSLEEP}$(3)	Wakeup from Sleep	-	14.00	15.00	CPU clock cycles
t_{WUSTOP}(3)	Wakeup from Stop mode	SVOS3, HSI, flash memory in Normal mode	4.6	6.2	µs
		SVOS3, HSI, flash memory in low-power mode	12.4	17.4	
		SVOS4, HSI, flash memory in Normal mode	15.5	21.1	
		SVOS4, HSI, flash memory in low-power mode	23.3	31.8	
		SVOS5, HSI, flash memory in Normal mode	39.1	52.6	
		SVOS5, HSI, flash memory in low-power mode	39.1	52.7	
		SVOS3, CSI, flash memory in Normal mode	30.0	41.6	
		SVOS3, CSI, flash memory in low-power mode	40.6	55.0	
		SVOS4, CSI, flash memory in Normal mode	41.0	55.4	
		SVOS4, CSI, flash memory in low-power mode	51.5	68.8	
		SVOS5, CSI, flash memory in Normal mode	67.3	89.5	
		SVOS5, CSI, flash memory in low-power mode	67.2	89.5	
$t_{WUSTDBY}$(3)	Wakeup from Standby mode	-	400.0	504.3	

1. Guaranteed by characterization results.
2. The maximum values have been measured at -40 °C, in worst conditions.
3. The wake-up times are measured from the wake-up event to the point in which the application code reads the first

6.3.10 External clock source characteristics

High-speed external user clock generated from an external source

In bypass mode the HSE oscillator is switched off and the input pin is a standard I/O.

The external clock signal has to respect the *Table 54: I/O static characteristics*. However, the recommended clock input waveform is shown in *Figure 21*.

Table 34. High-speed external user clock characteristics(1)

Symbol	Parameter	Min	Typ	Max	Unit
f_{HSE_ext}	User external clock source frequency	4	25	50	MHz
V_{HSEH}	Digital OSC_IN input high-level voltage	0.7 V_{DD}	-	V_{DD}	V
V_{HSEL}	Digital OSC_IN input low-level voltage	V_{SS}	-	0.3 V_{DD}	
$t_{W(HSE)}$	OSC_IN high or low time	7	-	-	ns

1. Guaranteed by design.

Figure 21. High-speed external clock source AC timing diagram

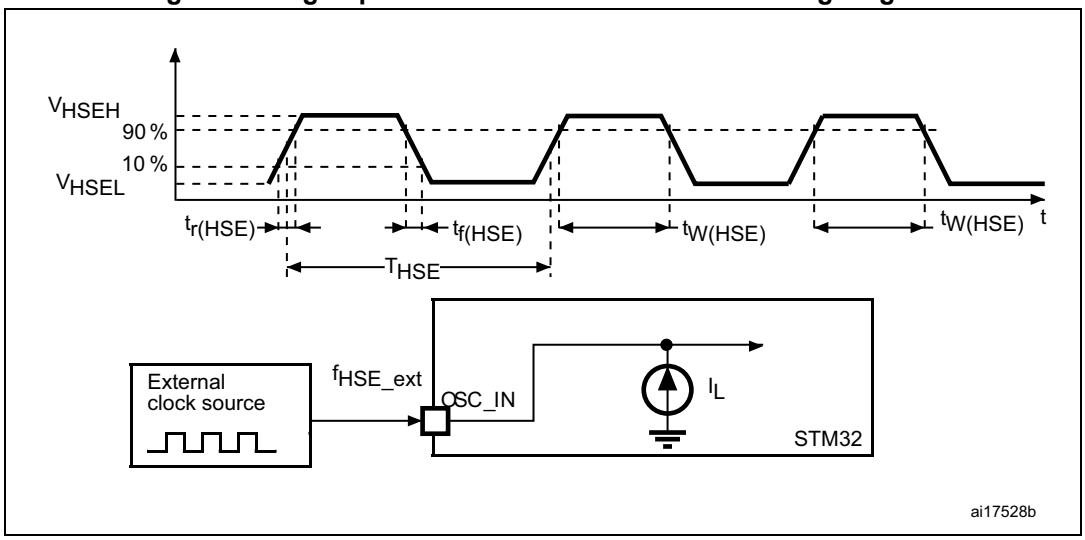

Low-speed external user clock generated from an external source

In bypass mode the LSE oscillator is switched off and the input pin is a standard I/O. The external clock signal has to respect the *Table 54: I/O static characteristics*. However, the recommended clock input waveform is shown in *Figure 22*.

Table 35. Low-speed external user clock characteristics(1)

Symbol	Parameter	Conditions	Min	Typ	Max	Unit
f_{LSE_ext}	User external clock source frequency	-	-	32.768	1000	kHz
V_{LSEH}	OSC32_IN input pin high-level voltage	-	0.7 V_{DD}	-	V_{DD}	V
V_{LSEL}	OSC32_IN input pin low-level voltage	-	V_{SS}	-	0.3 V_{DD}	
$t_{w(LSEH)}$ $t_{w(LSEL)}$	OSC32_IN high or low time	-	250	-	-	ns

1. Guaranteed by design.

Figure 22. Low-speed external clock source AC timing diagram

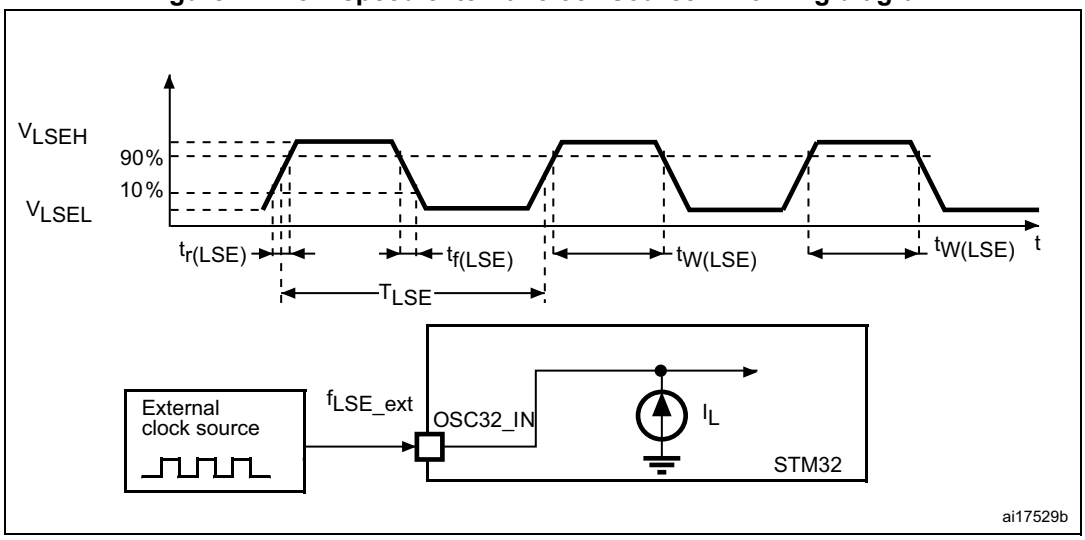

High-speed external clock generated from a crystal/ceramic resonator

The high-speed external (HSE) clock can be supplied with a 4 to 50 MHz crystal/ceramic resonator oscillator. All the information given in this paragraph are based on characterization results obtained with typical external components specified in *Table 36*. In the application, the resonator and the load capacitors have to be placed as close as possible to the oscillator pins in order to minimize output distortion and startup stabilization time. Refer to the crystal resonator manufacturer for more details on the resonator characteristics (frequency, package, accuracy).

Table 36. 4-50 MHz HSE oscillator characteristics(1)

Symbol	Parameter	Operating conditions(2)	Min	Typ	Max	Unit
F	Oscillator frequency	-	4	-	50	MHz
R_F	Feedback resistor	-	-	200	-	kΩ
$I_{DD(HSE)}$	HSE current consumption	During startup(3)	-	-	4	mA
		V_{DD}=3 V, Rm=30 Ω C_L=10 pF at 4 MHz	-	0.35	-	
		V_{DD}=3 V, Rm=30 Ω C_L=10 pF at 8 MHz	-	0.40	-	
		V_{DD}=3 V, Rm=30 Ω C_L=10 pF at 16 MHz	-	0.45	-	
		V_{DD}=3 V, Rm=30 Ω C_L=10 pF at 32 MHz	-	0.65	-	
		V_{DD}=3 V, Rm=30 Ω C_L=10 pF at 48 MHz	-	0.95	-	
$Gm_{critmax}$	Maximum critical crystal gm	Startup	-	-	1.5	mA/V
t_{SU}(4)	Start-up time	V_{DD} is stabilized	-	2	-	ms

1. Guaranteed by design.
2. Resonator characteristics given by the crystal/ceramic resonator manufacturer.
3. This consumption level occurs during the first 2/3 of the $t_{SU(HSE)}$ startup time.
4. $t_{SU(HSE)}$ is the startup time measured from the moment it is enabled (by software) to a stabilized 8 MHz oscillation is reached. This value is measured for a standard crystal resonator and it can vary significantly with the crystal manufacturer.

Note: For information on selecting the crystal, refer to application note AN2867 "Oscillator design guide for STM8AF/AL/S, STM32 MCUs and MPUs" available from the ST website www.st.com.

Figure 23. Typical application with an 8 MHz crystal

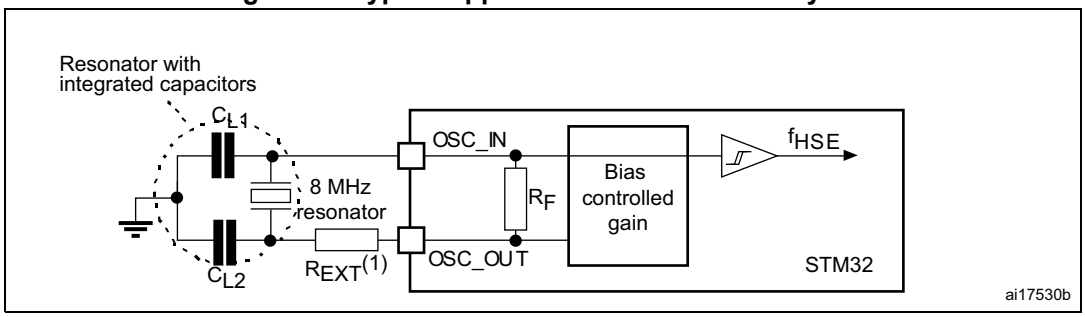

1. R_{EXT} value depends on the crystal characteristics.

Low-speed external clock generated from a crystal/ceramic resonator

The low-speed external (LSE) clock can be supplied with a 32.768 kHz crystal/ceramic resonator oscillator. All the information given in this paragraph are based on characterization results obtained with typical external components specified in *Table 37*. In the application, the resonator and the load capacitors have to be placed as close as possible to the oscillator pins in order to minimize output distortion and startup stabilization time. Refer to the crystal resonator manufacturer for more details on the resonator characteristics (frequency, package, accuracy).

Table 37. Low-speed external user clock characteristics(1)

Symbol	Parameter	Operating conditions(2)	Min	Typ	Max	Unit
F	Oscillator frequency	-	-	32.768	-	kHz
I_{DD}	LSE current consumption	LSEDRV[1:0] = 00, Low drive capability	-	290	-	nA
		LSEDRV[1:0] = 01, Medium Low drive capability	-	390	-	
		LSEDRV[1:0] = 10, Medium high drive capability	-	550	-	
		LSEDRV[1:0] = 11, High drive capability	-	900	-	
$Gm_{critmax}$	Maximum critical crystal gm	LSEDRV[1:0] = 00, Low drive capability	-	-	0.5	µA/V
		LSEDRV[1:0] = 01, Medium Low drive capability	-	-	0.75	
		LSEDRV[1:0] = 10, Medium high drive capability	-	-	1.7	
		LSEDRV[1:0] = 11, High drive capability	-	-	2.7	
t_{SU}(3)	Startup time	VDD is stabilized	-	2	-	s

1. Guaranteed by design.
2. Refer to the note and caution paragraphs below the table, and to the application note AN2867 *"Oscillator design guide for STM8AF/AL/S, STM32 MCUs and MPUs"*.
3. t_{SU} is the startup time measured from the moment it is enabled (by software) to a stabilized 32.768k Hz oscillation is reached. This value is measured for a standard crystal resonator and it can vary significantly with the crystal manufacturer.

Note: For information on selecting the crystal, refer to the application note AN2867 "Oscillator design guide for STM8AF/AL/S, STM32 MCUs and MPUs" available from the ST website www.st.com.

Figure 24. Typical application with a 32.768 kHz crystal

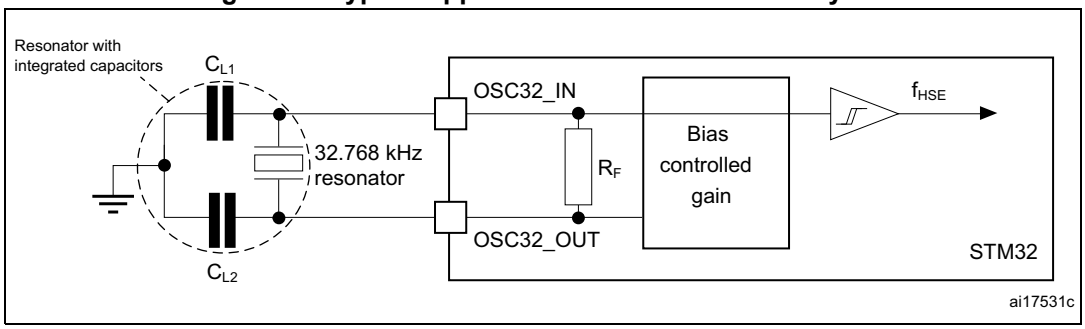

1. *An external resistor is not required between OSC32_IN and OSC32_OUT and it is forbidden to add one.*

6.3.11 Internal clock source characteristics

The parameters given in *Table 38* to *Table 40* are derived from tests performed under ambient temperature and V_{DD} supply voltage conditions summarized in *Table 12: General operating conditions*.

48 MHz high-speed internal RC oscillator (HSI48)

Table 38. HSI48 oscillator characteristics

Symbol	Parameter	Conditions	Min	Typ	Max	Unit
f_{HSI48}	HSI48 frequency	V_{DD}=3.3 V, TJ=30 °C	47.5(1)	48	48.5(1)	MHz
TRIM(2)	USER trimming step	-	-	0.175	0.250	%
USER TRIM COVERAGE(3)	USER TRIMMING coverage	± 32 steps	±4.70	±5.6	-	%
DuCy(HSI48)(2)	Duty Cycle	-	45	-	55	%
ACCHSI48_REL(3)(4)	Accuracy of the HSI48 oscillator over temperature (factory calibrated)	T_J=-40 to 125 °C	–4.5	-	3.5	%
Δ_{VDD}(HSI48)(2)(5)	HSI48 oscillator frequency drift with V_{DD}(6) (the reference is 3.3 V)	V_{DD}=3 to 3.6 V	-	0.025	0.05	%
		V_{DD}=1.62 V to 3.6 V	-	0.05	0.1	
$t_{su(HSI48)}$(2)	HSI48 oscillator start-up time	-	-	2.1	4.0	µs
$I_{DD(HSI48)}$(2)	HSI48 oscillator power consumption	-	-	350	400	µA
N_T jitter(2)	Next transition jitter Accumulated jitter on 28 cycles(7)	-	-	± 0.15	-	ns
P_T jitter(2)	Paired transition jitter Accumulated jitter on 56 cycles(7)	-	-	± 0.25	-	ns

1. Guaranteed by test in production.
2. Guaranteed by design.
3. Guaranteed by characterization results.
4. Δf_{HSI} = ACCHSI48_REL + Δ_{VDD}.

5. Δf_{HSI} = ACCHSI48_REL + Δ_{VDD}.
6. These values are obtained by using the formula: (Freq(3.6 V) - Freq(3.0 V)) / Freq(3.0 V) or (Freq(3.6 V) - Freq(1.62 V)) / Freq(1.62 V).
7. Jitter measurements are performed without clock source activated in parallel.

64 MHz high-speed internal RC oscillator (HSI)

Table 39. HSI oscillator characteristics(1)

Symbol	Parameter	Conditions	Min	Typ	Max	Unit
f_{HSI}	HSI frequency	V_{DD}=3.3 V, T_J=30 °C	63.7(2)	64	64.3(2)	MHz
TRIM	HSI user trimming step	Trimming is not a multiple of 32	-	0.24	0.32	%
		Trimming is 128, 256 and 384	−5.2	−1.8	-	
		Trimming is 64, 192, 320 and 448	−1.4	−0.8	-	
		Other trimming are a multiple of 32 (not including multiple of 64 and 128)	−0.6	−0.25	-	
DuCy(HSI)	Duty cycle	-	45	-	55	%
$\Delta_{VDD\ (HSI)}$	HSI oscillator frequency drift over V_{DD} (the reference is 3.3 V)	V_{DD}=1.62 to 3.6 V	−0.12	-	0.03	%
$\Delta_{TEMP(HSI)}$	HSI oscillator frequency drift over temperature (the reference is 64 MHz)	T_J=-20 to 105 °C	−1(3)	-	1(3)	%
		T_J=−40 to $T_J$max °C	−2(3)	-	1(3)	
t_{su}(HSI)	HSI oscillator start-up time	-	-	1.4	2	µs
t_{stab}(HSI)	HSI oscillator stabilization time	at 1% of target frequency	-	4	8	
		at 5% of target frequency	-	-	4	
I_{DD}(HSI)	HSI oscillator power consumption	-	-	300	400	µA

1. Guaranteed by design unless otherwise specified.
2. Guaranteed by test in production.
3. Guaranteed by characterization results.

4 MHz low-power internal RC oscillator (CSI)

Table 40. CSI oscillator characteristics(1)

Symbol	Parameter	Conditions	Min	Typ	Max	Unit
f_{CSI}	CSI frequency	V_{DD}=3.3 V, T_J=30 °C	3.96(2)	4	4.04(2)	MHz
TRIM	CSI trimming step	Trimming is not a multiple of 16	-	0.40	0.75	%
		Trimming is a multiple of 32	−4.75	−2.75	0.75	
		Other trimming values not multiple of 16 (excluding multiple of 32)	−0.43	0.00	0.75	
DuCy(CSI)	Duty cycle	-	45	-	55	%
Δ_{TEMP} (CSI)	CSI oscillator frequency drift over temperature	T_J = 0 to 85 °C	−3.7(3)	-	4.5(3)	%
		T_J = −40 to 125 °C	−11(3)	-	7.5(3)	
Δ_{VDD} (CSI)	CSI oscillator frequency drift over V_{DD}	V_{DD} = 1.62 to 3.6 V	−0.06	-	0.06	%
$t_{su(CSI)}$	CSI oscillator startup time	-	-	1	2	µs
$t_{stab(CSI)}$	CSI oscillator stabilization time (to reach ± 3% of f_{CSI})	-	-	-	4	cycle
$I_{DD(CSI)}$	CSI oscillator power consumption	-	-	23	30	µA

1. Guaranteed by design, unless otherwise specified.
2. Guaranteed by test in production.
3. Guaranteed by characterization results.

Low-speed internal (LSI) RC oscillator

Table 41. LSI oscillator characteristics

Symbol	Parameter	Conditions	Min	Typ	Max	Unit
f_{LSI}	LSI frequency	V_{DD} = 3.3 V, T_J = 25 °C	31.4(1)	32	32.6(1)	kHz
		T_J = –40 to 110 °C, V_{DD} = 1.62 to 3.6 V	29.76(2)	-	33.6(2)	
		T_J = –40 to 125 °C, V_{DD} = 1.62 to 3.6 V	29.4(2)	-	33.6(2)	
$t_{su(LSI)}$(3)	LSI oscillator startup time	-	-	80	130	µs
$t_{stab(LSI)}$(3)	LSI oscillator stabilization time (5% of final value)	-	-	120	170	
$I_{DD(LSI)}$(3)	LSI oscillator power consumption	-	-	130	280	nA

1. Guaranteed by test in production.
2. Guaranteed by characterization results.
3. Guaranteed by design.

6.3.12 PLL characteristics

The parameters given in *Table 42*, *Table 45* are derived from tests performed under temperature and V_{DD} supply voltage conditions summarized in *Table 12: General operating conditions*.

Table 42. PLL1 characteristics (wide VCO frequency range)(1)

Symbol	Parameter	Conditions		Min	Typ	Max	Unit
f_{PLL_IN}	PLL input clock	-		2	-	16	MHz
	PLL input clock duty cycle	-		10	-	90	%
$f_{PLL_P_OUT}$	PLL multiplier output clock P	VOS0		1.5	-	550(2)	MHz
		VOS1		1.5	-	400(2)	
		VOS2		1.5	-	300(2)	
		VOS3		1.5	-	170(2)	
f_{VCO_OUT}	PLL VCO output	-		192	-	836(3)	
t_{LOCK}	PLL lock time	Normal mode		15	50	150(3)	µs
		Sigma-delta mode (CKIN ≥ 8 MHz)		25	65	170	
Jitter	Cycle-to-cycle jitter(4)	f_{PLL_OUT} = f_{VCO_OUT}/100	f_{VCO_OUT} = 192 MHz	-	51	-	ps
			f_{VCO_OUT} = 400 MHz	-	19	-	
			f_{VCO_OUT} = 560 MHz	-	10	-	
			f_{VCO_OUT} = 800 MHz	-	9	-	
	Period jitter		f_{VCO_OUT} = 192 MHz	-	38	-	
			f_{VCO_OUT} = 560 MHz	-	8	-	
			f_{VCO_OUT} = 800 MHz	-	7	-	
	Long term jitter	Normal mode (CKIN = 2 MHz)	f_{VCO_OUT} = 192 MHz	-	0.15	-	%
			f_{VCO_OUT} = 400 MHz	-	0.14	-	
			f_{VCO_OUT} = 832 MHz	-	0.16	-	
		Sigma-delta mode (CKIN = 16 MHz)	f_{VCO_OUT} = 192 MHz	-	0.17	-	
			f_{VCO_OUT} = 500 MHz	-	0.08	-	
			f_{VCO_OUT} = 836 MHz	-	0.06	-	

Table 42. PLL1 characteristics (wide VCO frequency range)(1) (continued)

Symbol	Parameter	Conditions		Min	Typ	Max	Unit
$I_{DD(PLL)}$	PLL power consumption	f_{VCO_OUT} = 560 MHz	V_{DDA}	530	557	670	µA
			V_{CORE}	1190	1285	6300	
		f_{VCO_OUT} = 192 MHz	V_{DDA}	260	286	513	
			V_{CORE}	309	377	5700	

1. Guaranteed by design unless otherwise specified.
2. This value must be limited to the maximum frequency due to the product limitation.
3. Guaranteed by characterization results.
4. Integer mode only.

Table 43. PLL1 characteristics (medium VCO frequency range)(1)

Symbol	Parameter	Conditions		Min	Typ	Max	Unit
f_{PLL_IN}	PLL input clock	-		1	-	2	MHz
	PLL input clock duty cycle	-		10	-	90	%
f_{PLL_OUT}	PLL multiplier output clock P, Q, R	VOS0		1.17	-	210	MHz
		VOS1		1.17	-	210	
		VOS2		1.17	-	210	
		VOS3		1.17	-	200	
f_{VCO_OUT}	PLL VCO output	-		150	-	420	
t_{LOCK}	PLL lock time	Normal mode		-	60(2)	100(2)	µs
		Sigma-delta mode		forbidden			
Jitter	Cycle-to-cycle jitter(3)	-	f_{VCO_OUT} = 150 MHz	-	145	-	±ps
			f_{VCO_OUT} = 300 MHz	-	91	-	
			f_{VCO_OUT} = 400 MHz	-	64	-	
			f_{VCO_OUT} = 420 MHz	-	63	-	
	Period jitter	f_{PLL_OUT} = 50 MHz	f_{VCO_OUT} = 150 MHz	-	55	-	±-ps
			f_{VCO_OUT} = 400 MHz	-	30	-	
	Long term jitter	Normal mode	f_{VCO_OUT} = 400 MHz	-	±0.3	-	%
I(PLL)	PLL power consumption on V_{DD}	f_{VCO_OUT} = 420 MHz	VDD	-	440	1150	µA
			VCORE	-	530	-	
		f_{VCO_OUT} = 150 MHz	VDD	-	180	500	
			VCORE	-	200	-	

1. Guaranteed by design unless otherwise specified.
2. Guaranteed by characterization results.
3. Integer mode only.

Table 44. PLL2 and PLL3 characteristics (wide VCO frequency range)(1)

Symbol	Parameter	Conditions		Min	Typ	Max	Unit
f_{PLL_IN}	PLL input clock	-		2	-	16	MHz
	PLL input clock duty cycle	-		10	-	90	%
f_{PLL_OUT}	PLL multiplier output clock P, Q, R	VOS0		1.5	-	550(2)	MHz
		VOS1		1.5	-	400(2)	
		VOS2		1.5	-	300(2)	
		VOS3		1.5	-	170(2)	
f_{VCO_OUT}	PLL VCO output	-		192	-	960(3)	
t_{LOCK}	PLL lock time	Normal mode		-	50	150(3)	µs
		Sigma-delta mode (f_{PLL_IN} ≥ 8 MHz)		-	58	166(3)	
Jitter	Cycle-to-cycle jitter(4)	f_{VCO_OUT} = 192 MHz		-	134	-	±ps
		f_{VCO_OUT} = 200 MHz		-	134	-	
		f_{VCO_OUT} = 400 MHz		-	76	-	
		f_{VCO_OUT} = 800 MHz		-	39	-	
	Long term jitter	Normal mode (f_{PLL_IN} = 2 MHz)	f_{VCO_OUT} = 560 MHz	-	±0.2	-	%
		Normal mode (f_{PLL_IN} = 16 MHz)	f_{VCO_OUT} = 560 MHz	-	±0.8	-	
		Sigma-delta mode (f_{PLL_IN} = 2 MHz)	f_{VCO_OUT} = 560 MHz	-	±0.2	-	
		Sigma-delta mode (f_{PLL_IN} = 16 MHz)	f_{VCO_OUT} = 560 MHz	-	±0.8	-	
$I_{DD(PLL)}$(3)	PLL power consumption	f_{VCO_OUT} = 836 MHz	V_{DD}	-	590	1500	µA
			V_{CORE}	-	720	-	
		f_{VCO_OUT} = 192 MHz	V_{DD}	-	180	600	
			V_{CORE}	-	280	-	

1. Guaranteed by design unless otherwise specified.
2. This value must be limited to the maximum frequency due to the product limitation.

3. Guaranteed by characterization results.
4. Integer mode only.

Table 45. PLL2 and PLL3 characteristics (medium VCO frequency range)(1)

Symbol	Parameter	Conditions		Min	Typ	Max	Unit
f_{PLL_IN}	PLL input clock	-		1	-	2	MHz
	PLL input clock duty cycle	-		10	-	90	%
f_{PLL_OUT}	PLL multiplier output clock P, Q, R	VOS0		1.17	-	210	MHz
		VOS1		1.17	-	210	-
		VOS2		1.17	-	210	-
		VOS3		1.17	-	200	-
f_{VCO_OUT}	PLL VCO output	-		150	-	420	-
t_{LOCK}	PLL lock time	Normal mode		-	60	100(2)	µs
		Sigma-delta mode		forbidden			
Jitter	Cycle-to-cycle jitter(3)	f_{VCO_OUT} = 150 MHz		-	145	-	±ps
		f_{VCO_OUT} = 200 MHz		-	91	-	
		f_{VCO_OUT} = 400 MHz		-	64	-	
		f_{VCO_OUT} = 420 MHz		-	63	-	
	Period jitter	f_{PLL_OUT} = 50 MHz	f_{VCO_OUT} = 150 MHz	-	55	-	±ps
		f_{VCO_OUT} = 400 MHz		-	30	-	
	Long term jitter	Normal mode	f_{VCO_OUT} = 400 MHz	-	±0.3	-	%
$I_{DD(PLL)}$	PLL power consumption on V_{DD}	f_{VCO_OUT} = 420 MHz	V_{DD}	-	440	1150	µA
			V_{CORE}	-	530	-	
		f_{VCO_OUT} = 150 MHz	V_{DD}	-	180	500	
			V_{CORE}	-	200	-	

1. Guaranteed by design unless otherwise specified.
2. Guaranteed by characterization results.
3. Integer mode only.

6.3.13 Memory characteristics

Flash memory

The characteristics are given at T_J = –40 to 125 °C unless otherwise specified.

The devices are shipped to customers with the flash memory erased.

Table 46. Flash memory characteristics

Symbol	Parameter	Conditions	Min	Typ	Max	Unit
I_{DD}	Supply current	Write / Erase 8-bit mode	-	6.5	-	mA
		Write / Erase 16-bit mode	-	11.5	-	
		Write / Erase 32-bit mode	-	20	-	
		Write / Erase 64-bit mode	-	35	-	

Table 47. Flash memory programming

Symbol	Parameter	Conditions	Min(1)	Typ	Max(1)	Unit
t_{prog}	Word (266 bits) programming time	Program/erase parallelism x 8	-	290	580(2)	µs
		Program/erase parallelism x 16	-	180	360	
		Program/erase parallelism x 32	-	130	260	
		Program/erase parallelism x 64	-	100	200	
t_{ERASE}	Sector (128 Kbytes) erase time	Program/erase parallelism x 8	-	2	4	s
		Program/erase parallelism x 16	-	1.8	3.6	
		Program/erase parallelism x 32	-	1.1	2.2	
t_{ME}	Mass erase time (1 Mbyte)	Program/erase parallelism x 8	-	13	26	
		Program/erase parallelism x 16	-	8	16	
		Program/erase parallelism x 32	-	6	12	
		Program/erase parallelism x 64	-	5	10	
V_{prog}	Programming voltage	Program parallelism x 8	1.62	-	3.6	V
		Program parallelism x 16				
		Program parallelism x 32				
		Program parallelism x 64	1.8	-	3.6	

1. Guaranteed by characterization results.
2. The maximum programming time is measured after 10K erase operations.

Table 48. Flash memory endurance and data retention

Symbol	Parameter	Conditions	Min(1)	Unit
N_{END}	Endurance	T_J = –40 to +125 °C	10	kcycles
t_{RET}	Data retention	1 kcycle at T_A = 85 °C	30	Years
		10 kcycles at T_A = 55 °C	20	

1. Guaranteed by characterization results.

6.3.14 EMC characteristics

Susceptibility tests are performed on a sample basis during device characterization.

Functional EMS (electromagnetic susceptibility)

While a simple application is executed on the device (toggling 2 LEDs through I/O ports). the device is stressed by two electromagnetic events until a failure occurs. The failure is indicated by the LEDs:

- **Electrostatic discharge (ESD)** (positive and negative) is applied to all device pins until a functional disturbance occurs. This test is compliant with the IEC 61000-4-2 standard.
- **FTB**: A burst of fast transient voltage (positive and negative) is applied to V_{DD} and V_{SS} through a 100 pF capacitor, until a functional disturbance occurs. This test is compliant with the IEC 61000-4-4 standard.

A device reset allows normal operations to be resumed.

The test results are given in *Table 49*. They are based on the EMS levels and classes defined in application note AN1709 "*EMC design guide for STM8, STM32 and Legacy MCUs* ".

Table 49. EMS characteristics

Symbol	Parameter	Conditions	Level/ Class
V_{FESD}	Voltage limits to be applied on any I/O pin to induce a functional disturbance	V_{DD} = 3.3 V, T_A = 25 °C, LQFP176, conforming to IEC 61000-4-2	3B
V_{FTB}	Fast transient voltage burst limits to be applied through 100 pF on V_{DD} and V_{SS} pins to induce a functional disturbance	V_{DD} = 3.3 V, T_A = 25 °C, LQFP176, conforming to IEC 61000-4-4	5A

As a consequence, it is recommended to add a serial resistor (1 kΩ) located as close as possible to the MCU to the pins exposed to noise (connected to tracks longer than 50 mm on PCB).

Designing hardened software to avoid noise problems

EMC characterization and optimization are performed at component level with a typical application environment and simplified MCU software. It should be noted that good EMC performance is highly dependent on the user application and the software in particular.

Therefore, it is recommended that the user applies EMC software optimization and prequalification tests in relation with the EMC level requested for his application.

Software recommendations

The software flowchart must include the management of runaway conditions such as:

- Corrupted program counter
- Unexpected reset
- Critical Data corruption (control registers...)

Prequalification trials

Most of the common failures (unexpected reset and program counter corruption) can be reproduced by manually forcing a low state on the NRST pin or the Oscillator pins for 1 second.

To complete these trials, ESD stress can be applied directly on the device, over the range of specification values. When unexpected behavior is detected, the software can be hardened to prevent unrecoverable errors occurring (see application note AN1015 *"Software techniques for improving microcontrollers EMC performance")*.

Electromagnetic Interference (EMI)

The electromagnetic field emitted by the device are monitored while a simple application, executing EEMBC code, is running. This emission test is compliant with SAE IEC61967-2 standard, which specifies the test board and the pin loading.

Table 50. EMI characteristics for f_{HSE} = 8 MHz and f_{CPU} = 550 MHz

Symbol	Parameter	Conditions	Monitored frequency band	Max	Unit
S_{EMI}	Peak level(1)	V_{DD} = 3.6 V, T_A = 25 °C, LQFP176 package, compliant with IEC61967-2	0.1 to 30 MHz	14	dBµV
			30 to 130 MHz	20	
			130 MHz to 1 GHz	27	
			1 GHz to 2 GHz	17	
	Level(2)		0.1 MHz to 2 GHz	2.5	-

1. Refer to AN1709 "EMI radiated test" chapter.
2. Refer to AN1709 "EMI level classification" chapter.

6.3.15 Absolute maximum ratings (electrical sensitivity)

Based on three different tests (ESD, LU) using specific measurement methods, the device is stressed in order to determine its performance in terms of electrical sensitivity.

Electrostatic discharge (ESD)

Electrostatic discharges (a positive then a negative pulse) are applied to the pins of each sample according to each pin combination. This test conforms to the ANSI/ESDA/JEDEC JS-001 and ANSI/ESDA/JEDEC JS-002 standards.

Table 51. ESD absolute maximum ratings

Symbol	Ratings	Conditions	Packages	Class	Maximum value(1)	Unit
$V_{ESD(HBM)}$	Electrostatic discharge voltage (human body model)	T_A = 25 °C conforming to ANSI/ESDA/JEDEC JS-001	Packages with SMPS	1C	1000(2)	V
			Packages without SMPS	2	2000	
$V_{ESD(CDM)}$	Electrostatic discharge voltage (charge device model)	T_A = +25 °C conforming to ANSI/ESDA/JEDEC JS-002	All LQFP packages	C1	250	
			All BGA and WLCSP packages	C2a	500	

1. Guaranteed by characterization results.
2. Excluding V_{FBSMPS},the maximum value is 2000 V.

Static latchup

Two complementary static tests are required on six parts to assess the latchup performance:

- A supply overvoltage is applied to each power supply pin
- A current injection is applied to each input, output and configurable I/O pin

These tests are compliant with JESD78 IC latchup standard.

Table 52. Electrical sensitivities

Symbol	Parameter	Conditions	Class
LU	Static latchup class	Conforming to JESD78, $T_J = T_{JMax}$	II level A

6.3.16 I/O current injection characteristics

As a general rule, a current injection to the I/O pins, due to external voltage below V_{SS} or above V_{DD} (for standard, 3.3 V-capable I/O pins) should be avoided during the normal product operation. However, in order to give an indication of the robustness of the microcontroller in cases when an abnormal injection accidentally happens, susceptibility tests are performed on a sample basis during the device characterization.

Functional susceptibility to I/O current injection

While a simple application is executed on the device, the device is stressed by injecting current into the I/O pins programmed in floating input mode. While current is injected into the I/O pin, one at a time, the device is checked for functional failures.

The failure is indicated by an out of range parameter: ADC error above a certain limit (higher than 5 LSB TUE), out of conventional limits of induced leakage current on adjacent pins (out of –5 µA/+0 µA range), or other functional failure (for example reset, oscillator frequency deviation).

The following tables are the compilation of the SIC1/SIC2 and functional ESD results.

Negative induced A negative induced leakage current is caused by negative injection and positive induced leakage current by positive injection.

Table 53. I/O current injection susceptibility(1)

Symbol	Description	Functional susceptibility		Unit
		Negative injection	Positive injection	
I_{INJ}	PA12, PE8	5	0	mA
	PC4, PE12, PF15, PH0	0	NA	
	PA0, PA0_C, PA1, PA1_C, PC2, PC2_C, PC3, PC3_C, PA4, PA5, PE7, PG1, PH4, PH5, BOOT0	0	0	
	All other I/Os	5	NA	

1. Guaranteed by characterization results.

6.3.17 I/O port characteristics

General input/output characteristics

Unless otherwise specified, the parameters given in *Table 54: I/O static characteristics* are derived from tests performed under the conditions summarized in *Table 12: General operating conditions*. All I/Os are CMOS and TTL compliant (except for BOOT0).

Note: For information on GPIO configuration, refer to application note AN4899 “STM32 GPIO configuration for hardware settings and low-power consumption”, available from the ST website www.st.com.

Table 54. I/O static characteristics

Symbol	Parameter	Condition	Min	Typ	Max	Unit
V_{IL}	I/O input low level voltage except BOOT0	1.62 V<V_{DD}<3.6 V	-	-	$0.3V_{DD}$(1)	V
	I/O input low level voltage except BOOT0		-	-	$0.4V_{DD}-0.1$(2)	
	BOOT0 I/O input low level voltage		-	-	$0.19V_{DD}+0.1$(2)	
V_{IH}	I/O input high level voltage except BOOT0 and Pxy_C I/Os	1.62 V<V_{DD}<3.6 V	$0.7V_{DD}$(1)	-	-	V
	Pxy_C pin input high level voltage		$0.7V_{DD}$(3)			
	I/O input high level voltage except BOOT0		$0.47V_{DD}+0.25$(2)	-	-	
	BOOT0 I/O input high level voltage		$0.17V_{DD}+0.6$(2)	-	-	
V_{HYS}(2)	TT_xx, FT_xxx and NRST I/O input hysteresis	1.62 V< V_{DD} <3.6 V	-	250	-	mV
	BOOT0 I/O input hysteresis		-	200	-	
I_{lkg}(4)	FT_xx Input leakage current(2)	0< V_{IN} ≤ Max(V_{DDXXX})(9)	-	-	+/-250	nA
		Max(V_{DDXXX}) < V_{IN} ≤ 5.5 V (5)(6)(9)	-	-	1500	
	FT_u IO	0< V_{IN} ≤ Max(V_{DDXXX})(9)	-	-	+/- 350	
		Max(V_{DDXXX}) < V_{IN} ≤ 5.5 V (5)(6)(9)	-	-	5000(7)	
	TT_xx Input leakage current	0< V_{IN} ≤ Max(V_{DDXXX}) (9)	-	-	+/-250	
	VPP (BOOT0 alternate function)	0< V_{IN} ≤ V_{DD}	-	-	15	
		V_{DD} < V_{IN} ≤ 9 V			35	
R_{PU}	Weak pull-up equivalent resistor(8)	V_{IN}=V_{SS}	30	40	50	kΩ
R_{PD}	Weak pull-down equivalent resistor(8)	V_{IN}=V_{DD}(9)	30	40	50	
C_{IO}	I/O pin capacitance	-	-	5	-	pF

1. Compliant with CMOS requirements.
2. Guaranteed by design.
3. To use these I/Os in digital input mode, V_{DD} must respect the following condition: 0.7 V_{DD} < V_{DDA} + 0.3 V.
4. This parameter represents the pad leakage of the I/O itself. The total product pad leakage is provided by the following formula: $I_{Total_leak_max}$ = 10 µA + [number of I/Os where V_{IN} is applied on the pad] x $I_{lkg(Max)}$.
5. All FT_xx IO except FT_lu, FT_u and PC3.
6. V_{IN} must be less than Max(VDDXXX) + 3.6 V.
7. To sustain a voltage higher than MIN(V_{DD}, V_{DDA}, $V_{DD33USB}$) +0.3 V, the internal pull-up and pull-down resistors must be disabled.
8. The pull-up and pull-down resistors are designed with a true resistance in series with a switchable PMOS/NMOS. This PMOS/NMOS contribution to the series resistance is minimal (~10% order).

9. Max(VDDXXX) is the maximum value of all the I/O supplies.

All I/Os are CMOS and TTL compliant (no software configuration required). Their characteristics cover more than the strict CMOS-technology or TTL parameters. The coverage of these requirements for FT I/Os is shown in *Figure 25*.

Figure 25. V_{IL}/V_{IH} for all I/Os except BOOT0

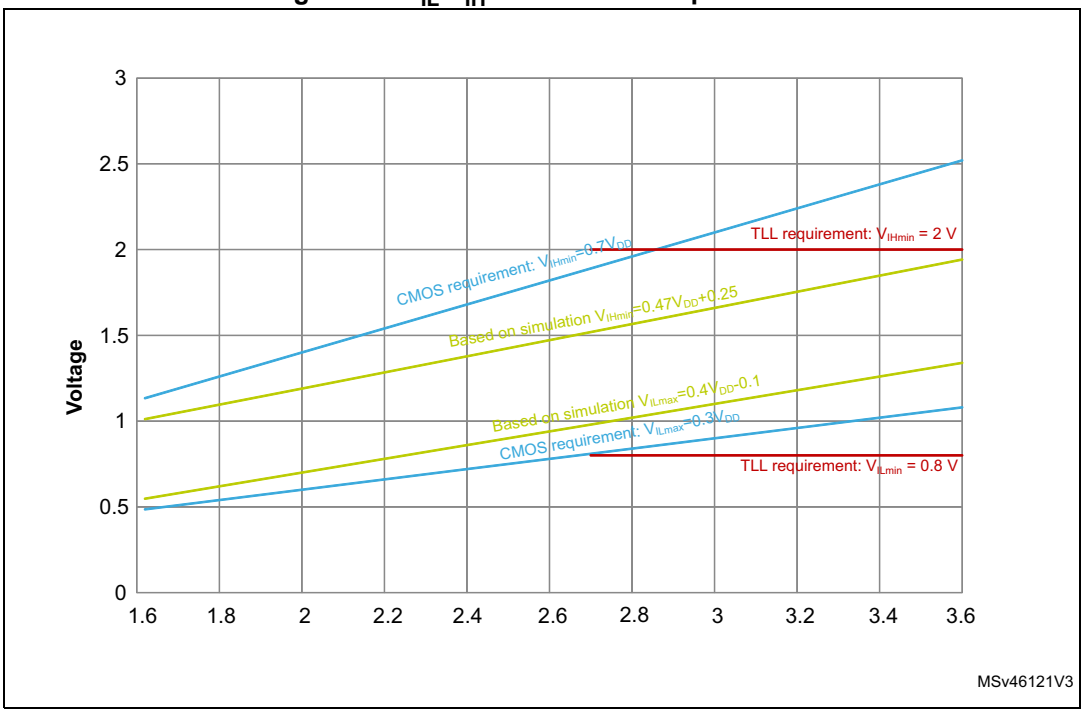

Output driving current

The GPIOs (general purpose input/outputs) can sink or source up to ±8 mA, and sink or source up to ±20 mA (with a relaxed V_{OL}/V_{OH}).

In the user application, the number of I/O pins which can drive current must be limited to respect the absolute maximum rating specified in *Section 6.2*. In particular:

- The sum of the currents sourced by all the I/Os on $V_{DD,}$ plus the maximum Run consumption of the MCU sourced on $V_{DD,}$ cannot exceed the absolute maximum rating ΣI_{VDD} (see *Table 10*).
- The sum of the currents sunk by all the I/Os on V_{SS} plus the maximum Run consumption of the MCU sunk on V_{SS} cannot exceed the absolute maximum rating ΣI_{VSS} (see *Table 10*).

Output voltage levels

Unless otherwise specified, the parameters given in *Table 55: Output voltage characteristics for all I/Os except PC13, PC14 and PC15* and *Table 56: Output voltage characteristics for PC13, PC14 and PC15* are derived from tests performed under ambient temperature and V_{DD} supply voltage conditions summarized in *Table 12: General operating conditions*. All I/Os are CMOS and TTL compliant.

Table 55. Output voltage characteristics for all I/Os except PC13, PC14 and PC15(1)

Symbol	Parameter	Conditions(3)	Min	Max	Unit
V_{OL}	Output low level voltage	CMOS port(2) I_{IO} = 8 mA 2.7 V ≤ V_{DD} ≤ 3.6 V	-	0.4	V
V_{OH}	Output high level voltage	CMOS port(2) I_{IO} = −8 mA 2.7 V ≤ V_{DD} ≤ 3.6 V	V_{DD} − 0.4	-	
V_{OL}(3)	Output low level voltage	TTL port(2) I_{IO} = 8 mA 2.7 V ≤ V_{DD} ≤ 3.6 V	-	0.4	
V_{OH}(3)	Output high level voltage	TTL port(2) I_{IO} = −8 mA 2.7 V ≤ V_{DD} ≤ 3.6 V	2.4	-	
V_{OL}(3)	Output low level voltage	I_{IO} = 20 mA 2.7 V ≤ V_{DD} ≤ 3.6 V	-	1.3	
V_{OH}(3)	Output high level voltage	I_{IO} = −20 mA 2.7 V ≤ V_{DD} ≤ 3.6 V	V_{DD} − 1.3	-	
V_{OL}(3)	Output low level voltage	I_{IO} = 4 mA 1.62 V ≤ V_{DD} ≤ 3.6 V	-	0.4	
V_{OH} (3)	Output high level voltage	I_{IO} = −4 mA 1.62 V ≤V_{DD} < 3.6 V	V_{DD} − 0.4	-	
V_{OL}(3)	Output low level voltage for Pxy_C pins	I_{IO} = 1 mA 1.62 V ≤ V_{DD} < 3.6 V	-	0.4	
V_{OH}(3)	Output high level voltage for Pxy_C pins(4)	I_{IO} = 1 mA 1.62 V ≤ V_{DD} < 3.6 V	Min(V_{DD} − 0.4, V_{DDA} + 0.3)	-	
V_{OLFM+}(3)	Output low level voltage for an FTf I/O pin in FM+ mode	I_{IO} = 20 mA 2.3 V ≤ V_{DD} ≤ 3.6 V	-	0.4	
		I_{IO} = 10 mA 1.62 V ≤ V_{DD} ≤ 3.6 V	-	0.4	

1. The IIO current sourced or sunk by the device must always respect the absolute maximum rating specified in *Table 9: Voltage characteristics*, and the sum of the currents sourced or sunk by all the I/Os (I/O ports and control pins) must always respect the absolute maximum ratings ΣIIO.
2. TTL and CMOS outputs are compatible with JEDEC standards JESD36 and JESD52.
3. Guaranteed by design.
4. If V_{DDA} + 0.3V < V_{DD} - 0.4 V, an injection current from V_{DD} to V_{DDA} can be observed that can perturb the analog peripherals.

Table 56. Output voltage characteristics for PC13, PC14 and PC15(1)

Symbol	Parameter	Conditions(3)	Min	Max	Unit
V_{OL}	Output low level voltage	CMOS port(2) I_{IO} = 3 mA 2.7 V≤ V_{DD} ≤3.6 V	-	0.4	V
V_{OH}	Output high level voltage	CMOS port(2) I_{IO} = −3 mA 2.7 V≤ V_{DD} ≤3.6 V	V_{DD}−0.4	-	
V_{OL}(3)	Output low level voltage	TTL port(2) I_{IO} = 3 mA 2.7 V≤ V_{DD} ≤3.6 V	-	0.4	
V_{OH}(2)	Output high level voltage	TTL port(2) I_{IO} = −3 mA 2.7 V≤ V_{DD} ≤3.6 V	2.4	-	
V_{OL}(2)	Output low level voltage	I_{IO} = 1.5 mA 1.62 V≤ V_{DD} ≤3.6 V	-	0.4	
V_{OH}(2)	Output high level voltage	I_{IO} = −1.5 mA 1.62 V≤ V_{DD} ≤3.6 V	V_{DD}−0.4	-	

1. The IIO current sourced or sunk by the device must always respect the absolute maximum rating specified in *Table 9: Voltage characteristics*, and the sum of the currents sourced or sunk by all the I/Os (I/O ports and control pins) must always respect the absolute maximum ratings ΣIIO.
2. TTL and CMOS outputs are compatible with JEDEC standards JESD36 and JESD52.
3. Guaranteed by design.

Output buffer timing characteristics (HSLV option disabled)

The HSLV bit of SYSCFG_CCCSR register can be used to optimize the I/O speed when the product voltage is below 2.7 V.

Table 57. Output timing characteristics (HSLV OFF)(1)

Speed	Symbol	Parameter	conditions	Min	Max	Unit
00	F_{max}(2)	Maximum frequency	C=50 pF, 2.7 V≤ V_{DD}≤3.6 V	-	12	MHz
			C=50 pF, 1.62 V≤V_{DD}≤2.7 V	-	3	
			C=30 pF, 2.7 V≤V_{DD}≤3.6 V	-	12	
			C=30 pF, 1.62 V≤V_{DD}≤2.7 V	-	3	
			C=10 pF, 2.7 V≤V_{DD}≤3.6 V	-	16	
			C=10 pF, 1.62 V≤V_{DD}≤2.7 V	-	4	
	t_r/t_f(3)	Output high to low level fall time and output low to high level rise time	C=50 pF, 2.7 V≤ V_{DD}≤3.6 V	-	16.6	ns
			C=50 pF, 1.62 V≤V_{DD}≤2.7 V	-	33.3	
			C=30 pF, 2.7 V≤V_{DD}≤3.6 V	-	13.3	
			C=30 pF, 1.62 V≤V_{DD}≤2.7 V	-	25	
			C=10 pF, 2.7 V≤V_{DD}≤3.6 V	-	10	
			C=10 pF, 1.62 V≤V_{DD}≤2.7 V	-	20	
01	F_{max}(2)	Maximum frequency	C=50 pF, 2.7 V≤ V_{DD}≤3.6 V	-	60	MHz
			C=50 pF, 1.62 V≤V_{DD}≤2.7 V	-	15	
			C=30 pF, 2.7 V≤V_{DD}≤3.6 V	-	80	
			C=30 pF, 1.62 V≤V_{DD}≤2.7 V	-	15	
			C=10 pF, 2.7 V≤V_{DD}≤3.6 V	-	110	
			C=10 pF, 1.62 V≤V_{DD}≤2.7 V	-	20	
	t_r/t_f(3)	Output high to low level fall time and output low to high level rise time	C=50 pF, 2.7 V≤ V_{DD}≤3.6 V	-	5.2	ns
			C=50 pF, 1.62 V≤V_{DD}≤2.7 V	-	10	
			C=30 pF, 2.7 V≤V_{DD}≤3.6 V	-	4.2	
			C=30 pF, 1.62 V≤V_{DD}≤2.7 V	-	7.5	
			C=10 pF, 2.7 V≤V_{DD}≤3.6 V	-	2.8	
			C=10 pF, 1.62 V≤V_{DD}≤2.7 V	-	5.2	

Table 57. Output timing characteristics (HSLV OFF)(1) (continued)

Speed	Symbol	Parameter	conditions	Min	Max	Unit
10	F_{max}(2)	Maximum frequency	C=50 pF, 2.7 V≤V_{DD}≤3.6 V(4)	-	85	MHz
			C=50 pF, 1.62 V≤V_{DD}≤2.7 V(4)	-	35	
			C=30 pF, 2.7 V≤V_{DD}≤3.6 V(4)	-	110	
			C=30 pF, 1.62 V≤V_{DD}≤2.7 V(4)	-	40	
			C=10 pF, 2.7 V≤V_{DD}≤3.6 V(4)	-	166	
			C=10 pF, 1.62 V≤V_{DD}≤2.7 V(4)	-	100	
	t_r/t_f(3)	Output high to low level fall time and output low to high level rise time	C=50 pF, 2.7 V≤V_{DD}≤3.6 V(4)	-	3.8	ns
			C=50 pF, 1.62 V≤V_{DD}≤2.7 V(4)	-	6.9	
			C=30 pF, 2.7 V≤V_{DD}≤3.6 V(4)	-	2.8	
			C=30 pF, 1.62 V≤V_{DD}≤2.7 V(4)	-	5.2	
			C=10 pF, 2.7 V≤V_{DD}≤3.6 V(4)	-	1.8	
			C=10 pF, 1.62 V≤V_{DD}≤2.7 V[v]	-	3.3	
11	F_{max}(2)	Maximum frequency	C=50 pF, 2.7 V≤V_{DD}≤3.6 V[v]	-	100	MHz
			C=50 pF, 1.62 V≤V_{DD}≤2.7 V(4)	-	50	
			C=30 pF, 2.7 V≤V_{DD}≤3.6 V[v]	-	133	
			C=30 pF, 1.62 V≤V_{DD}≤2.7 V(4)	-	66	
			C=10 pF, 2.7 V≤V_{DD}≤3.6 V(4)	-	220	
			C=10 pF, 1.62 V≤V_{DD}≤2.7 V(4)	-	85	
	t_r/t_f(3)	Output high to low level fall time and output low to high level rise time	C=50 pF, 2.7 V≤V_{DD}≤3.6 V(4)	-	3.3	ns
			C=50 pF, 1.62 V≤V_{DD}≤2.7 V(4)	-	6.6	
			C=30 pF, 2.7 V≤V_{DD}≤3.6 V(4)	-	2.4	
			C=30 pF, 1.62 V≤V_{DD}≤2.7 V(4)	-	4.5	
			C=10 pF, 2.7 V≤V_{DD}≤3.6 V(4)	-	1.5	
			C=10 pF, 1.62 V≤V_{DD}≤2.7 V(4)	-	2.7	

1. Guaranteed by design.
2. The maximum frequency is achieved with a duty cycle of 45 to 55 %, when loaded by the specified capacitance.
3. The fall and rise times are defined between 90% and 10% and between 10% and 90% of the output waveform, respectively.
4. Compensation system enabled.

Output buffer timing characteristics (HSLV option enabled)

Table 58. Output timing characteristics (HSLV ON)(1)

Speed	Symbol	Parameter	conditions	Min	Max	Unit
00	F_{max}(2)	Maximum frequency	C=50 pF, 1.62 V≤V_{DD}≤2.7 V	-	10	MHz
			C=30 pF, 1.62 V≤V_{DD}≤2.7 V	-	10	
			C=10 pF, 1.62 V≤V_{DD}≤2.7 V	-	10	
	t_r/t_f(3)	Output high to low level fall time and output low to high level rise time	C=50 pF, 1.62 V≤V_{DD}≤2.7 V	-	11	ns
			C=30 pF, 1.62 V≤V_{DD}≤2.7 V	-	9	
			C=10 pF, 1.62 V≤V_{DD}≤2.7 V	-	6.6	
01	F_{max}(2)	Maximum frequency	C=50 pF, 1.62 V≤V_{DD}≤2.7 V	-	50	MHz
			C=30 pF, 1.62 V≤V_{DD}≤2.7 V	-	58	
			C=10 pF, 1.62 V≤V_{DD}≤2.7 V	-	66	
	t_r/t_f(3)	Output high to low level fall time and output low to high level rise time	C=50 pF, 1.62 V≤V_{DD}≤2.7 V	-	6.6	ns
			C=30 pF, 1.62 V≤V_{DD}≤2.7 V	-	4.8	
			C=10 pF, 1.62 V≤V_{DD}≤2.7 V	-	3	
10	F_{max}(2)	Maximum frequency	C=50 pF, 1.62 V≤V_{DD}≤2.7 V(4)	-	55	MHz
			C=30 pF, 1.62 V≤V_{DD}≤2.7 V(4)	-	80	
			C=10 pF, 1.62 V≤V_{DD}≤2.7 V(4)	-	133	
	t_r/t_f(3)	Output high to low level fall time and output low to high level rise time	C=50 pF, 1.62 V≤V_{DD}≤2.7 V(4)	-	5.8	ns
			C=30 pF, 1.62 V≤V_{DD}≤2.7 V(4)	-	4	
			C=10 pF, 1.62 V≤V_{DD}≤2.7 V(4)	-	2.4	
11	F_{max}(2)	Maximum frequency	C=50 pF, 1.62 V≤V_{DD}≤2.7 V(4)	-	60	MHz
			C=30 pF, 1.62 V≤V_{DD}≤2.7 V(4)	-	90	
			C=10 pF, 1.62 V≤V_{DD}≤2.7 V(4)	-	175	
	t_r/t_f(3)	Output high to low level fall time and output low to high level rise time	C=50 pF, 1.62 V≤V_{DD}≤2.7 V(4)	-	5.3	ns
			C=30 pF, 1.62 V≤V_{DD}≤2.7 V(4)	-	3.6	
			C=10 pF, 1.62 V≤V_{DD}≤2.7 V(4)	-	1.9	

1. Guaranteed by design.
2. The maximum frequency is achieved with a duty cycle of 45 to 55 %, when loaded by the specified capacitance.
3. The fall and rise times are defined between 90% and 10% and between 10% and 90% of the output waveform, respectively.
4. Compensation system enabled.

Analog switch between ports Pxy_C and Pxy

PA0_C, PA1_C, PC2_C and PC3_C can be connected internally to PA0, PA1, PC2 and PC3, respectively (refer to SYSCFG_PMCR register in RM0468 reference manual). The switch is controlled by $V_{DDSWITCH}$ voltage level. It is defined through BOOSTVDDSEL bit of SYSCFG_PMCR. If the switch is closed the switch characteristics are given in the table below.

Table 59. Pxy_C and Pxy analog switch characteristics

Parameter	Conditions		Min	Typ	Max	Unit
Switch impedance	Switch control boosted		-	-	315	Ω
	Switch control not boosted	$V_{DDSWITCH}$ > 2.7 V	-	-	315	
		$V_{DDSWITCH}$ > 2.4 V	-	-	335	
		$V_{DDSWITCH}$ > 2.0 V	-	-	390	
		$V_{DDSWITCH}$ > 1.8 V	-	-	445	
		$V_{DDSWITCH}$ > 1.62 V	-	-	550	

6.3.18 NRST pin characteristics

The NRST pin input driver uses CMOS technology. It is connected to a permanent pull-up resistor, R_{PU} (see *Table 54: I/O static characteristics*).

Unless otherwise specified, the parameters given in *Table 60* are derived from tests performed under the ambient temperature and V_{DD} supply voltage conditions summarized in *Table 12: General operating conditions*.

Table 60. NRST pin characteristics

Symbol	Parameter	Conditions	Min	Typ	Max	Unit
R_{PU}(2)	Weak pull-up equivalent resistor(1)	$V_{IN} = V_{SS}$	30	40	50	kΩ
$V_{F(NRST)}$(2)	NRST Input filtered pulse	1.71 V < V_{DD} < 3.6 V	-	-	50	ns
$V_{NF(NRST)}$(2)	NRST Input not filtered pulse	1.71 V < V_{DD} < 3.6 V	350	-	-	
		1.62 V < V_{DD} < 3.6 V	1000	-	-	

1. The pull-up is designed with a true resistance in series with a switchable PMOS. This PMOS contribution to the series resistance must be minimum (~10% order).
2. Guaranteed by design.

Figure 26. Recommended NRST pin protection

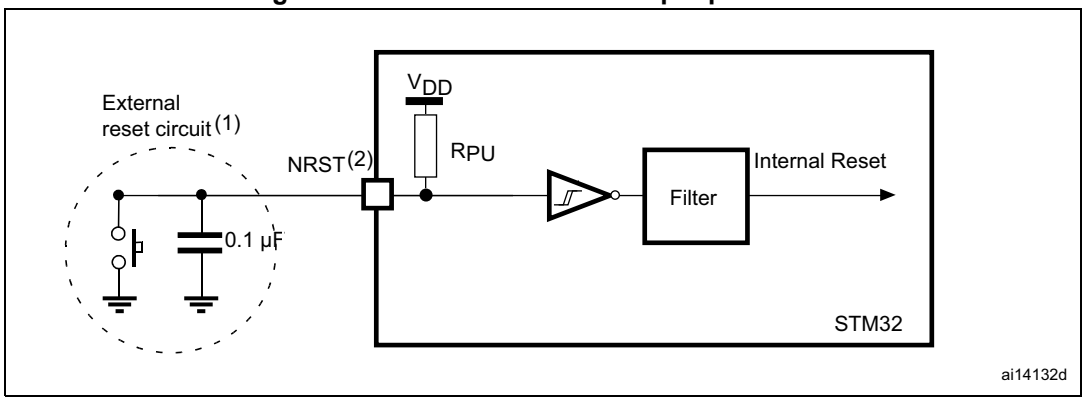

1. The reset network protects the device against parasitic resets.
2. The user must ensure that the level on the NRST pin can go below the $V_{IL(NRST)}$ max level specified in *Table 54*. Otherwise the reset is not taken into account by the device.

6.3.19 FMC characteristics

Unless otherwise specified, the parameters given in *Table 61* to *Table 74* for the FMC interface are derived from tests performed under the ambient temperature, f_{HCLK} frequency and V_{DD} supply voltage conditions summarized in *Table 12: General operating conditions*, with the following configuration:

- Output speed is set to OSPEEDRy[1:0] = 11
- Measurement points are done at CMOS levels: $0.5V_{DD}$
- IO Compensation cell activated.
- HSLV activated when $V_{DD} \leq 2.7$ V
- VOS level set to VOS0.

Refer to *Section 6.3.17: I/O port characteristics* for more details on the input/output alternate function characteristics.

Asynchronous waveforms and timings

Figure 27 through *Figure 29* represent asynchronous waveforms and *Table 61* through *Table 68* provide the corresponding timings. The results shown in these tables are obtained with the following FMC configuration:

- AddressSetupTime = 0x1
- AddressHoldTime = 0x1
- DataSetupTime = 0x1 (except for asynchronous NWAIT mode , DataSetupTime = 0x5)
- BusTurnAroundDuration = 0x0
- Capacitive load C_L = 30 pF

In all timing tables, the T_{KERCK} is the $f_{mc_ker_ck}$ clock period.

Table 61. Asynchronous non-multiplexed SRAM/PSRAM/NOR read timings(1)

Symbol	Parameter	Min	Max	Unit
$t_{w(NE)}$	FMC_NE low time	$3T_{fmc_ker_ck}-1$	$3T_{fmc_ker_ck}+1$	ns
$t_{v(NOE_NE)}$	FMC_NEx low to FMC_NOE low	0	0.5	
$t_{w(NOE)}$	FMC_NOE low time	$2T_{fmc_ker_ck}-1$	$2T_{fmc_ker_ck}+1$	
$t_{h(NE_NOE)}$	FMC_NOE high to FMC_NE high hold time	$T_{fmc_ker_ck}$	-	
$t_{v(A_NE)}$	FMC_NEx low to FMC_A valid	-	0.5	
$t_{h(A_NOE)}$	Address hold time after FMC_NOE high	$2T_{fmc_ker_ck}$	-	
$t_{su(Data_NE)}$	Data to FMC_NEx high setup time	$T_{fmc_ker_ck}+14$	-	
$t_{su(Data_NOE)}$	Data to FMC_NOEx high setup time	13	-	
$t_{h(Data_NOE)}$	Data hold time after FMC_NOE high	0	-	
$t_{h(Data_NE)}$	Data hold time after FMC_NEx high	0	-	
$t_{v(NADV_NE)}$	FMC_NEx low to FMC_NADV low	-	4	
$t_{w(NADV)}$	FMC_NADV low time	-	$T_{fmc_ker_ck}+1$	

1. Guaranteed by characterization results.

Table 62. Asynchronous non-multiplexed SRAM/PSRAM/NOR read-NWAIT timings(1)(2)

Symbol	Parameter	Min	Max	Unit
$t_{w(NE)}$	FMC_NE low time	$7T_{fmc_ker_ck}-1$	$7T_{fmc_ker_ck}+1$	ns
$t_{w(NOE)}$	FMC_NOE low time	$5T_{fmc_ker_ck}-1$	$5T_{fmc_ker_ck}+1$	
$t_{w(NWAIT)}$	FMC_NWAIT low time	$T_{fmc_ker_ck}-0.5$	-	
$t_{su(NWAIT_NE)}$	FMC_NWAIT valid before FMC_NEx high	$4T_{fmc_ker_ck}+9$	-	
$t_{h(NE_NWAIT)}$	FMC_NEx hold time after FMC_NWAIT invalid	$3T_{fmc_ker_ck}+12$	-	

1. Guaranteed by characterization results.
2. N_{WAIT} pulse width is equal to 1 fmc_ker_ck cycle.

Figure 27. Asynchronous non-multiplexed SRAM/PSRAM/NOR read waveforms

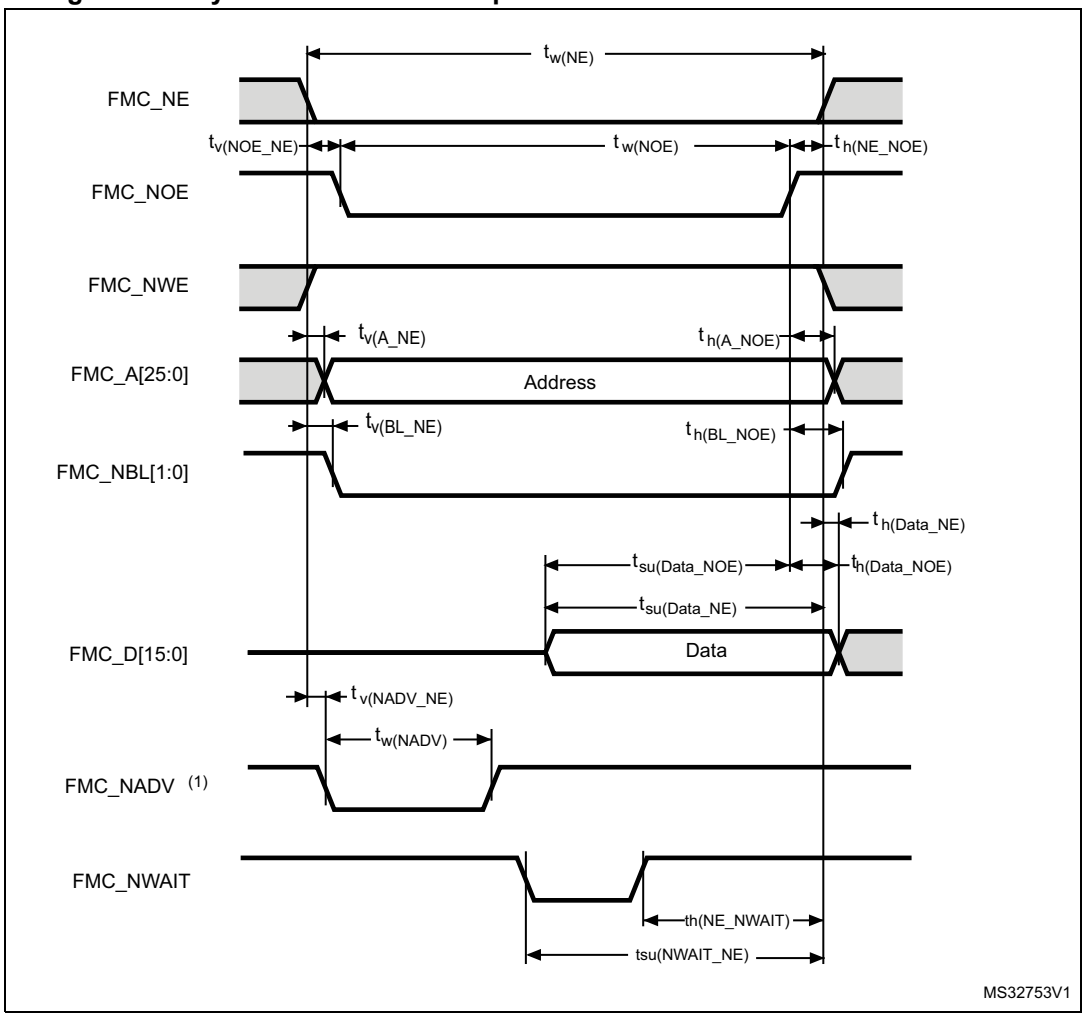

1. Mode 2/B, C and D only. In Mode 1, FMC_NADV is not used.

Table 63. Asynchronous non-multiplexed SRAM/PSRAM/NOR write timings(1)

Symbol	Parameter	Min	Max	Unit
$t_{w(NE)}$	FMC_NE low time	$3T_{fmc_ker_ck} - 1$	$3T_{fmc_ker_ck} + 1$	ns
$t_{v(NWE_NE)}$	FMC_NEx low to FMC_NWE low	$T_{fmc_ker_ck} - 1$	$T_{fmc_ker_ck}$	
$t_{w(NWE)}$	FMC_NWE low time	$T_{fmc_ker_ck} - 0.5$	$T_{fmc_ker_ck} + 0.5$	
$t_{h(NE_NWE)}$	FMC_NWE high to FMC_NE high hold time	$T_{fmc_ker_ck}$	-	
$t_{v(A_NE)}$	FMC_NEx low to FMC_A valid	-	1	
$t_{h(A_NWE)}$	Address hold time after FMC_NWE high	$T_{fmc_ker_ck} - 0.5$	-	
$t_{v(BL_NE)}$	FMC_NEx low to FMC_BL valid	-	0.5	
$t_{h(BL_NWE)}$	FMC_BL hold time after FMC_NWE high	$T_{fmc_ker_ck} - 0.5$	-	
$t_{v(Data_NE)}$	Data to FMC_NEx low to Data valid	-	$T_{fmc_ker_ck} + 2$	
$t_{h(Data_NWE)}$	Data hold time after FMC_NWE high	$T_{fmc_ker_ck}$	-	
$t_{v(NADV_NE)}$	FMC_NEx low to FMC_NADV low	-	5	
$t_{w(NADV)}$	FMC_NADV low time	-	$T_{fmc_ker_ck} + 1$	

1. Guaranteed by characterization results.

Table 64. Asynchronous non-multiplexed SRAM/PSRAM/NOR write-NWAIT timings(1)(2)

Symbol	Parameter	Min	Max	Unit
$t_{w(NE)}$	FMC_NE low time	$8T_{fmc_ker_ck} - 1$	$8T_{fmc_ker_ck} + 1$	ns
$t_{w(NWE)}$	FMC_NWE low time	$6T_{fmc_ker_ck} - 1$	$6T_{fmc_ker_ck} + 1$	
$t_{su(NWAIT_NE)}$	FMC_NWAIT valid before FMC_NEx high	$5T_{fmc_ker_ck} + 13$	-	
$t_{h(NE_NWAIT)}$	FMC_NEx hold time after FMC_NWAIT invalid	$4T_{fmc_ker_ck} + 12$	-	

1. Guaranteed by characterization results.
2. N_{WAIT} pulse width is equal to 1 fmc_ker_ck cycle.

Figure 28. Asynchronous non-multiplexed SRAM/PSRAM/NOR write waveforms

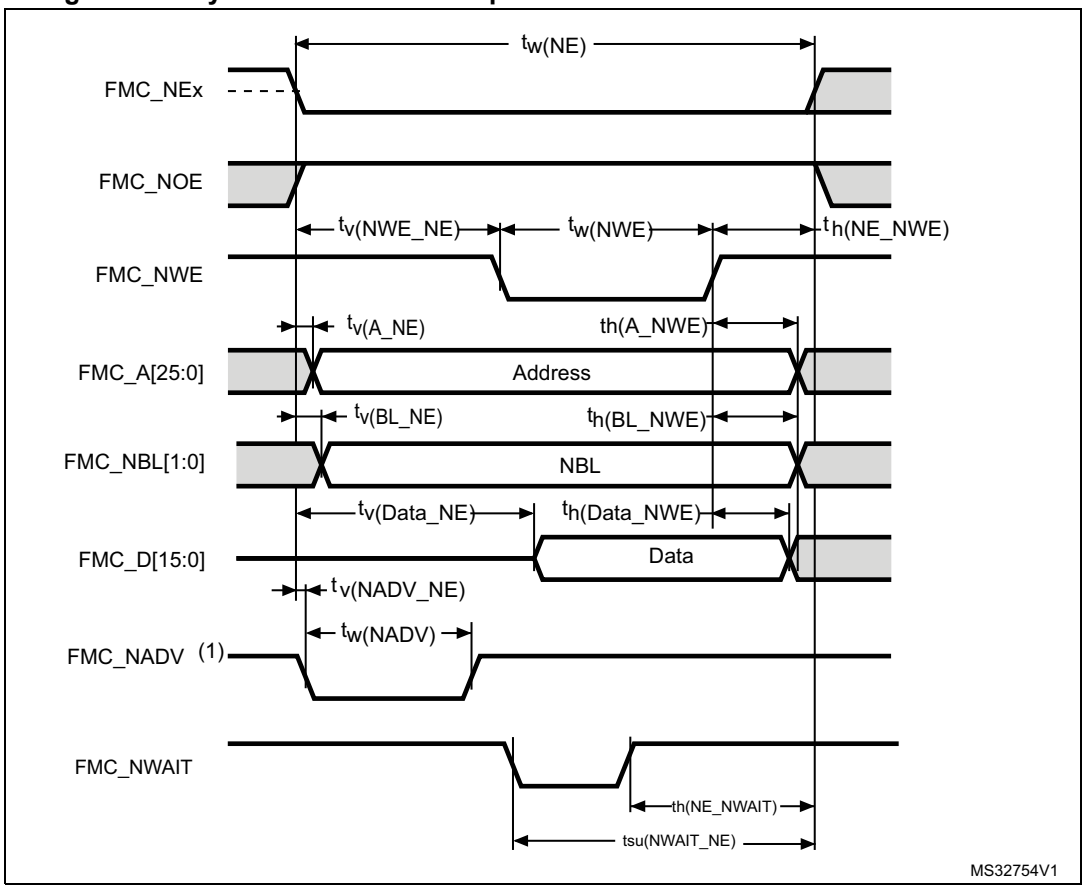

1. Mode 2/B, C and D only. In Mode 1, FMC_NADV is not used.

Table 65. Asynchronous multiplexed PSRAM/NOR read timings(1)

Symbol	Parameter	Min	Max	Unit
$t_{w(NE)}$	FMC_NE low time	$4T_{fmc_ker_ck} - 1$	$4T_{fmc_ker_ck} + 1$	ns
$t_{v(NOE_NE)}$	FMC_NEx low to FMC_NOE low	$2T_{fmc_ker_ck}$	$2T_{fmc_ker_ck} + 0.5$	
$t_{tw(NOE)}$	FMC_NOE low time	$T_{fmc_ker_ck} - 1$	$T_{fmc_ker_ck} + 1$	
$t_{h(NE_NOE)}$	FMC_NOE high to FMC_NE high hold time	$T_{fmc_ker_ck}$	-	
$t_{v(A_NE)}$	FMC_NEx low to FMC_A valid	-	0.5	
$t_{v(NADV_NE)}$	FMC_NEx low to FMC_NADV low	0	4.0	
$t_{w(NADV)}$	FMC_NADV low time	$T_{fmc_ker_ck} - 0.5$	$T_{fmc_ker_ck} + 1$	
$t_{h(AD_NADV)}$	FMC_AD(address) valid hold time after FMC_NADV high)	$T_{fmc_ker_ckk} - 4$	-	
$t_{h(A_NOE)}$	Address hold time after FMC_NOE high	$T_{fmc_ker_ck} - 0.5$	-	
$t_{su(Data_NE)}$	Data to FMC_NEx high setup time	$T_{fmc_ker_ck} + 14$	-	
$t_{su(Data_NOE)}$	Data to FMC_NOE high setup time	13	-	
$t_{h(Data_NE)}$	Data hold time after FMC_NEx high	0	-	
$t_{h(Data_NOE)}$	Data hold time after FMC_NOE high	0	-	

1. Guaranteed by characterization results.

Table 66. Asynchronous multiplexed PSRAM/NOR read-NWAIT timings(1)

Symbol	Parameter	Min	Max	Unit
$t_{w(NE)}$	FMC_NE low time	$8T_{fmc_ker_ck} - 1$	$8T_{fmc_ker_ck} + 1$	ns
$t_{w(NOE)}$	FMC_NWE low time	$5T_{fmc_ker_ck} - 1$	$5T_{fmc_ker_ck} + 1$	
$t_{su(NWAIT_NE)}$	FMC_NWAIT valid before FMC_NEx high	$4T_{fmc_ker_ck} + 9$	-	
$t_{h(NE_NWAIT)}$	FMC_NEx hold time after FMC_NWAIT invalid	$3T_{fmc_ker_ck} + 12$	-	

1. Guaranteed by characterization results.

Figure 29. Asynchronous multiplexed PSRAM/NOR read waveforms

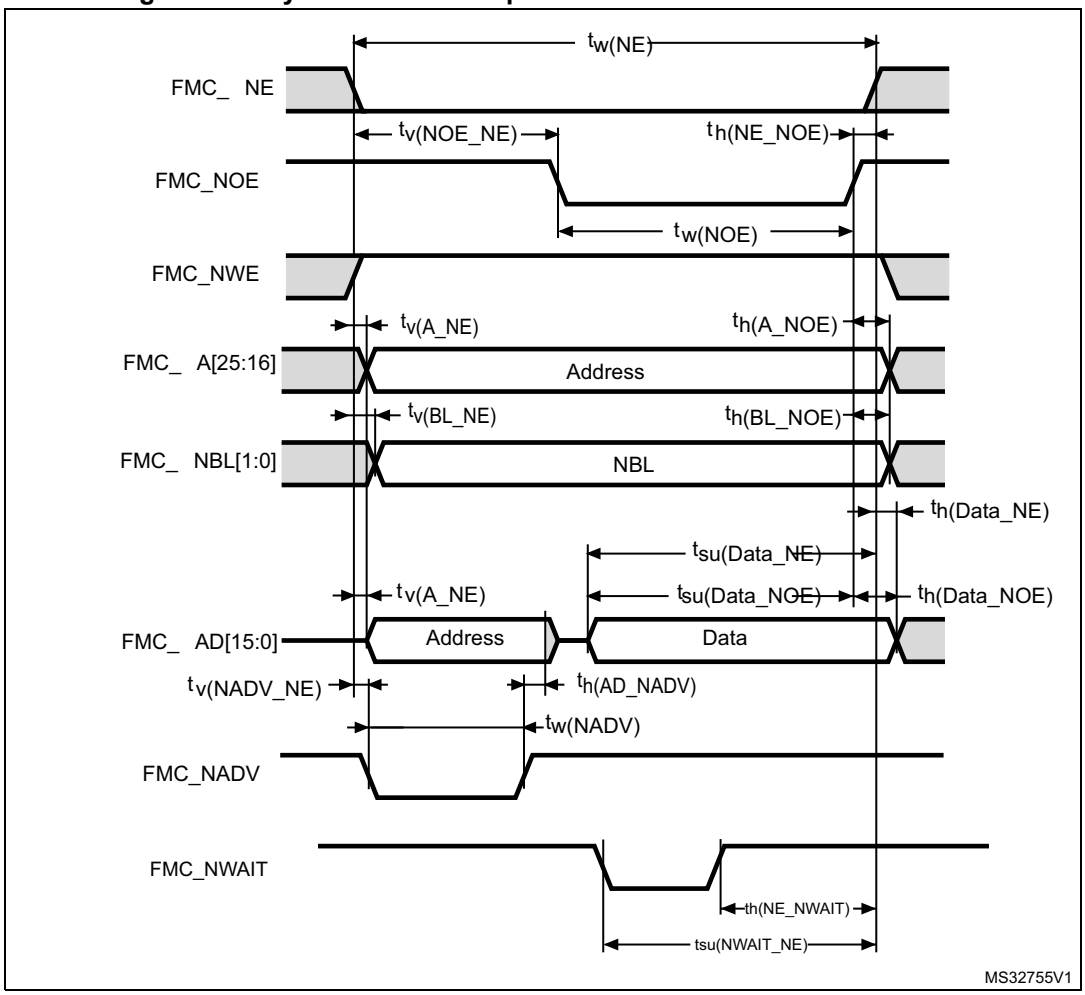

Table 67. Asynchronous multiplexed PSRAM/NOR write timings(1)

Symbol	Parameter	Min	Max	Unit
$t_{w(NE)}$	FMC_NE low time	$4T_{fmc_ker_ck} - 1$	$4T_{fmc_ker_ck}$	ns
$t_{v(NWE_NE)}$	FMC_NEx low to FMC_NWE low	$T_{fmc_ker_ck} - 1$	$T_{fmc_ker_ck} + 0.5$	
$t_{w(NWE)}$	FMC_NWE low time	$2T_{fmc_ker_ck} - 0.5$	$2T_{fmc_ker_ck} + 0.5$	
$t_{h(NE_NWE)}$	FMC_NWE high to FMC_NE high hold time	$T_{fmc_ker_ck} - 0.5$	-	
$t_{v(A_NE)}$	FMC_NEx low to FMC_A valid	-	1	
$t_{v(NADV_NE)}$	FMC_NEx low to FMC_NADV low	0	5.0	
$t_{w(NADV)}$	FMC_NADV low time	$T_{fmc_ker_ck} - 0.5$	$T_{fmc_ker_ck} + 1$	
$t_{h(AD_NADV)}$	FMC_AD(adress) valid hold time after FMC_NADV high)	$T_{fmc_ker_ck} - 4.5$	-	
$t_{h(A_NWE)}$	Address hold time after FMC_NWE high	$T_{fmc_ker_ck} - 0.5$	-	
$t_{h(BL_NWE)}$	FMC_BL hold time after FMC_NWE high	$T_{fmc_ker_ck} - 0.5$	-	
$t_{v(BL_NE)}$	FMC_NEx low to FMC_BL valid	-	0.5	
$t_{v(Data_NADV)}$	FMC_NADV high to Data valid	-	$T_{fmc_ker_ck} + 2$	
$t_{h(Data_NWE)}$	Data hold time after FMC_NWE high	$T_{fmc_ker_ck}$	-	

1. Guaranteed by characterization results.

Table 68. Asynchronous multiplexed PSRAM/NOR write-NWAIT timings(1)(2)

Symbol	Parameter	Min	Max	Unit
$t_{w(NE)}$	FMC_NE low time	$9T_{fmc_ker_ck} - 1$	$9T_{fmc_ker_ck}$	ns
$t_{w(NWE)}$	FMC_NWE low time	$7T_{fmc_ker_ck} - 0.5$	$7T_{fmc_ker_ck} + 0.5$	
$t_{su(NWAIT_NE)}$	FMC_NWAIT valid before FMC_NEx high	$5T_{fmc_ker_ck} + 9$	-	
$t_{h(NE_NWAIT)}$	FMC_NEx hold time after FMC_NWAIT invalid	$4T_{fmc_ker_ck} + 12$	-	

1. Guaranteed by characterization results.
2. N_{WAIT} pulse width is equal to 1 fmc_ker_ck cycle.

Synchronous waveforms and timings

Figure 32 through *Figure 31* represent synchronous waveforms and *Table 71* through *Table 70* provide the corresponding timings. The results shown in these tables are obtained with the following FMC configuration:

- BurstAccessMode = FMC_BurstAccessMode_Enable
- MemoryType = FMC_MemoryType_CRAM
- WriteBurst = FMC_WriteBurst_Enable
- CLKDivision = 1
- DataLatency = 1 for NOR flash, DataLatency = 0 for PSRAM, C_L = 30 pF

In all the timing tables, the $T_{fmc_ker_ck}$ is the $f_{mc_ker_ck}$ clock period, with the following FMC_CLK maximum values:

- For 2.7 V<V_{DD}<3.6 V: maximum FMC_CLK = 137 MHz at C_L = 20 pF
- For 1.8 V<V_{DD}<1.9 V: maximum FMC_CLK = 100 MHz at C_L = 20 pF
- For 1.62 V<V_{DD}<1.8 V: maximumFMC_CLK = 88 MHz at C_L = 15 pF

Table 69. Synchronous non-multiplexed NOR/PSRAM read timings(1)

Symbol	Parameter		Min	Max	Unit
$t_{w(CLK)}$	FMC_CLK period		$2T_{fmc_ker_ck}$ –0.5	-	ns
$t_{(CLKL-NExL)}$	FMC_CLK low to FMC_NEx low (x=0..2)		-	3	
$t_{d(CLKH-NExH)}$	FMC_CLK high to FMC_NEx high (x= 0…2)		$T_{fmc_ker_ck}$+1.5	-	
$t_{d(CLKL-NADVL)}$	FMC_CLK low to FMC_NADV low	1.62 V <V_{DD} < 3.6 V	-	5.5	
		2.7 V <V_{DD} < 3.6 V		2.0	
$t_{d(CLKL-NADVH)}$	FMC_CLK low to FMC_NADV high	1.62 V <V_{DD} < 3.6 V	1	-	
		2.7 V <V_{DD} < 3.6 V		-	
$t_{d(CLKL-AV)}$	FMC_CLK low to FMC_Ax valid (x=16…25)		-	3	
$t_{d(CLKH-AIV)}$	FMC_CLK high to FMC_Ax invalid (x=16…25)		$T_{fmc_ker_ck}$	-	
$t_{d(CLKL-NOEL)}$	FMC_CLK ow to FMC_NOE low		-	2.5	
$t_{d(CLKH-NOEH)}$	FMC_CLK high to FMC_NOE high		$T_{fmc_ker_ck}$+1	-	
$t_{su(DV-CLKH)}$	FMC_D[15:0] valid data before FMC_CLK high		3	-	
$t_{h(CLKH-DV)}$	FMC_D[15:0] valid data after FMC_CLK high		0	-	
$t_{(NWAIT-CLKH)}$	FMC_NWAIT valid before FMC_CLK high		3	-	
$t_{h(CLKH-NWAIT)}$	FMC_NWAIT valid after FMC_CLK high		2.5	-	

1. Guaranteed by characterization results.

Figure 30. Synchronous non-multiplexed NOR/PSRAM read timings

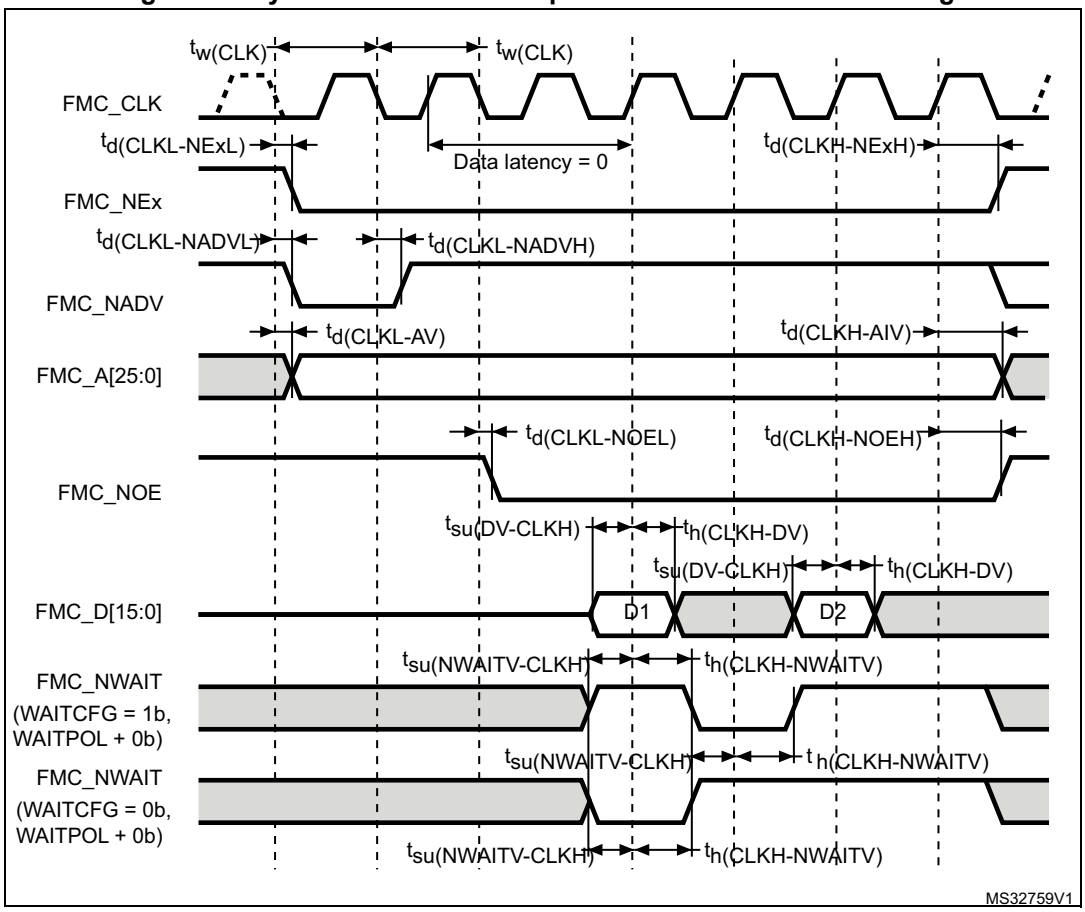

Table 70. Synchronous non-multiplexed PSRAM write timings(1)

Symbol	Parameter		Min	Max	Unit
$t_{(CLK)}$	FMC_CLK period		$2T_{fmc_ker_ck}$ –0.5	-	ns
$t_{d(CLKL-NExL)}$	FMC_CLK low to FMC_NEx low (x=0..2)		-	3	
$t_{(CLKH-NExH)}$	FMC_CLK high to FMC_NEx high (x= 0…2)		$T_{fmc_ker_ck}$+1.5	-	
$t_{d(CLKL-NADVL)}$	FMC_CLK low to FMC_NADV low	1.62 V <V_{DD} < 3.6 V	-	5.5	
		2.7 V <V_{DD} < 3.6 V		2	
$t_{d(CLKL-NADVH)}$	FMC_CLK low to FMC_NADV high	1.62 V <V_{DD} < 3.6 V	1	-	
		2.7 V <V_{DD} < 3.6 V		-	
$t_{d(CLKL-AV)}$	FMC_CLK low to FMC_Ax valid (x=16…25)		-	3	
$t_{d(CLKH-AIV)}$	FMC_CLK high to FMC_Ax invalid (x=16…25)		$T_{fmc_ker_ck}$	-	
$t_{d(CLKL-NWEL)}$	FMC_CLK low to FMC_NWE low		-	2.5	
$t_{d(CLKH-NWEH)}$	FMC_CLK high to FMC_NWE high		$T_{fmc_ker_ck}$+1	-	
$t_{d(CLKL-Data)}$	FMC_D[15:0] valid data after FMC_CLK low		-	3.5	
$t_{d(CLKL-NBLL)}$	FMC_CLK low to FMC_NBL low		-	2	
$t_{d(CLKH-NBLH)}$	FMC_CLK high to FMC_NBL high		$T_{fmc_ker_ck}$+0.5	-	
$t_{su(NWAIT-CLKH)}$	FMC_NWAIT valid before FMC_CLK high		3	-	
$t_{h(CLKH-NWAIT)}$	FMC_NWAIT valid after FMC_CLK high		2.5	-	

1. Guaranteed by characterization results.

Figure 31. Synchronous non-multiplexed PSRAM write timings

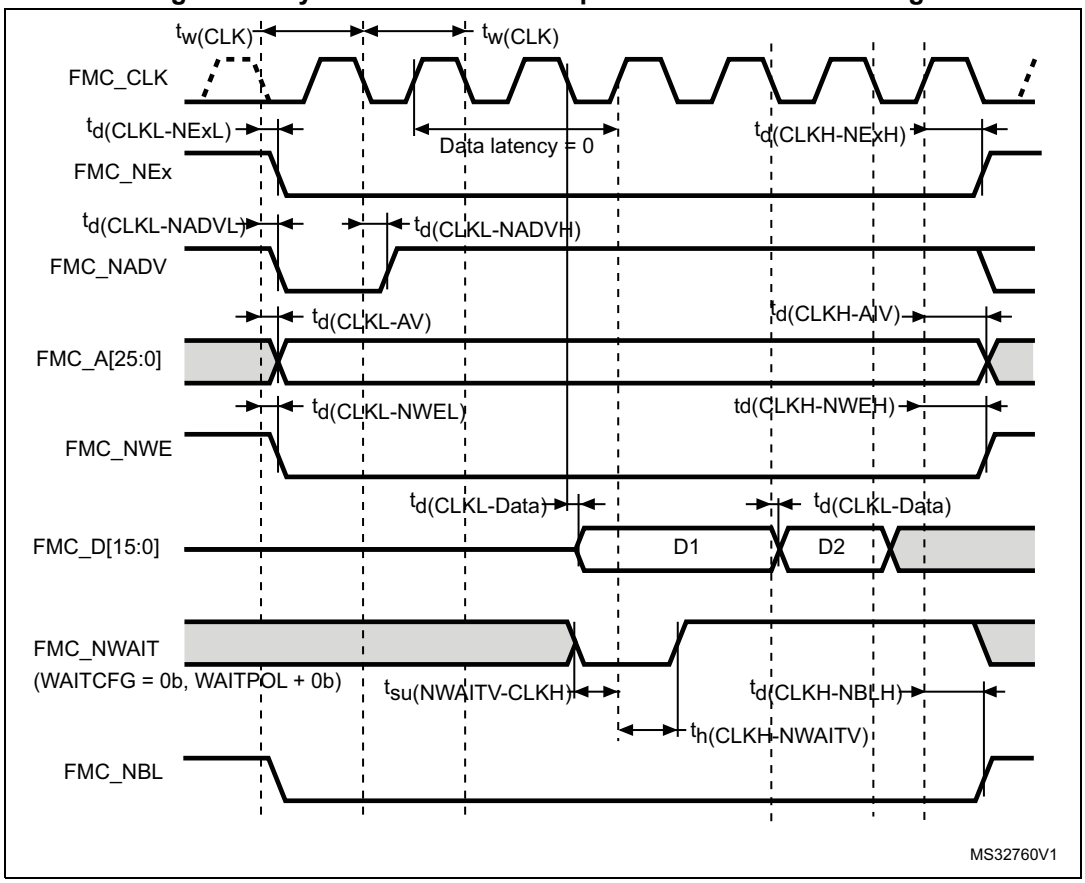

Table 71. Synchronous multiplexed NOR/PSRAM read timings(1)

Symbol	Parameter		Min	Max	Unit
$t_{w(CLK)}$	FMC_CLK period		$2T_{fmc_ker_ck}$ –0.5	-	ns
$t_{d(CLKL-NExL)}$	FMC_CLK low to FMC_NEx low (x=0..2)		-	3	
$t_{d(CLKH_NExH)}$	FMC_CLK high to FMC_NEx high (x= 0…2)		$T_{fmc_ker_ck}$+1.5	-	
$t_{d(CLKL-NADVL)}$	FMC_CLK low to FMC_NADV low	1.62 V <V_{DD} < 3.6 V	-	5.5	
		2.7 V <V_{DD} < 3.6 V		2	
$t_{d(CLKL-NADVH)}$	FMC_CLK low to FMC_NADV high	1.62 V <V_{DD} < 3.6 V	1	-	
		2.7 V <V_{DD} < 3.6 V		-	
$t_{d(CLKL-AV)}$	FMC_CLK low to FMC_Ax valid (x=16…25)		-	3	
$t_{d(CLKH-AIV)}$	FMC_CLK high to FMC_Ax invalid (x=16…25)		$T_{fmc_ker_ck}$	-	
$t_{d(CLKL-NOEL)}$	FMC_CLK low to FMC_NOE low		-	2.5	
$t_{d(CLKH-NOEH)}$	FMC_CLK high to FMC_NOE high		$T_{fmc_ker_ck}$ +1	-	
$t_{d(CLKL-ADV)}$	FMC_CLK low to FMC_AD[15:0] valid		-	3	
$t_{d(CLKL-ADIV)}$	FMC_CLK low to FMC_AD[15:0] invalid		0	-	
$t_{su(ADV-CLKH)}$	FMC_A/D[15:0] valid data before FMC_CLK high		3	-	
$t_{h(CLKH-ADV)}$	FMC_A/D[15:0] valid data after FMC_CLK high		0	-	
$t_{su(NWAIT-CLKH)}$	FMC_NWAIT valid before FMC_CLK high		3	-	
$t_{h(CLKH-NWAIT)}$	FMC_NWAIT valid after FMC_CLK high		2.5	-	

1. Guaranteed by characterization results.

Figure 32. Synchronous multiplexed NOR/PSRAM read timings

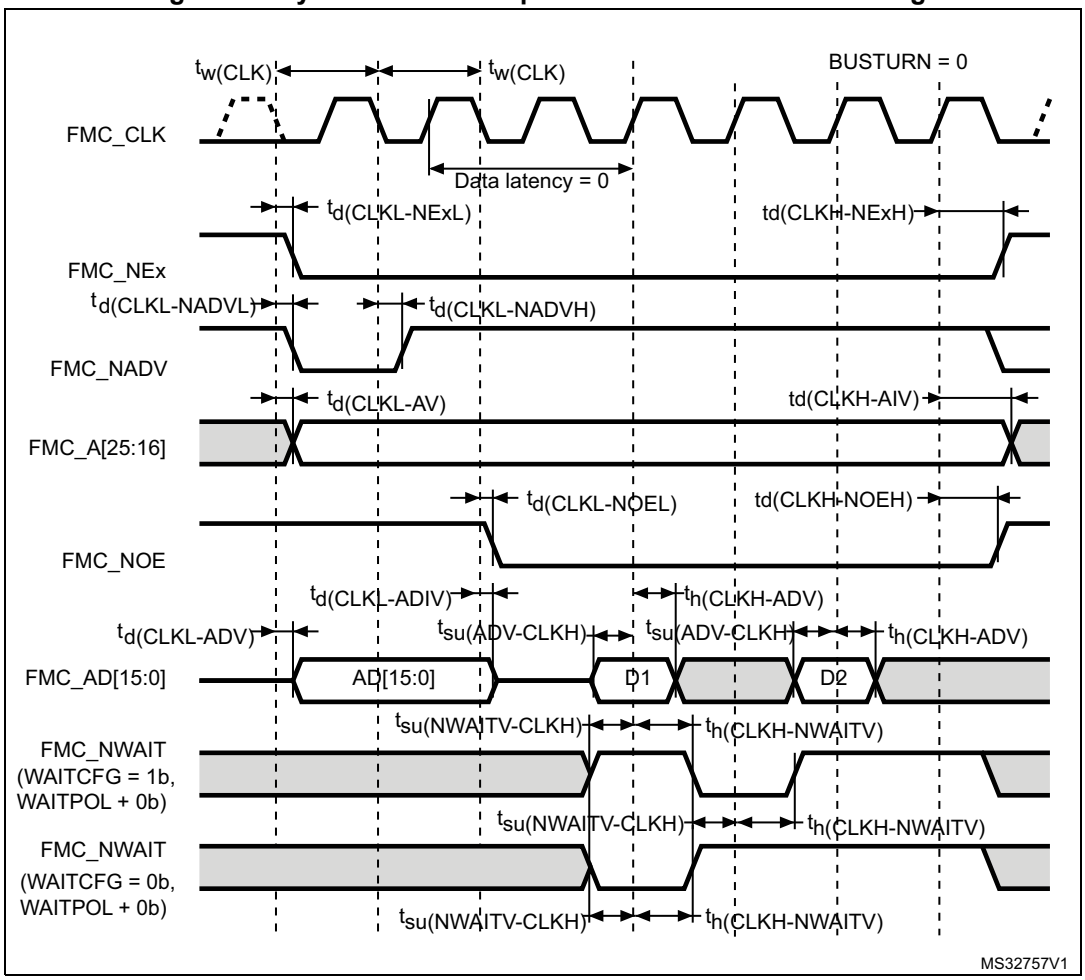

Table 72. Synchronous multiplexed PSRAM write timings(1)

Symbol	Parameter		Min	Max	Unit
$t_{w(CLK)}$	FMC_CLK period, V_{DD} = 2.7 to 3.6 V		$2T_{fmc_ker_ck}$ –0.5	-	ns
$t_{d(CLKL-NExL)}$	FMC_CLK low to FMC_NEx low (x =0..2)		-	3	
$t_{d(CLKH-NExH)}$	FMC_CLK high to FMC_NEx high (x = 0…2)		$T_{fmc_ker_ck}$ +1.5	-	
$t_{d(CLKL-NADVL)}$	FMC_CLK low to FMC_NADV low	1.62 V <V_{DD} < 3.6 V	-	5.5	
		2.7 V <V_{DD} < 3.6 V		2.0	
$t_{d(CLKL-NADVH)}$	FMC_CLK low to FMC_NADV high	1.62 V <V_{DD} < 3.6 V	1	-	
		2.7 V <V_{DD} < 3.6 V		-	
$t_{d(CLKL-AV)}$	FMC_CLK low to FMC_Ax valid (x =16…25)		-	3	
$t_{d(CLKH-AIV)}$	FMC_CLK high to FMC_Ax invalid (x =16…25)		$T_{fmc_ker_ck}$	-	
$t_{d(CLKL-NWEL)}$	FMC_CLK low to FMC_NWE low		-	2.5	
$t_{(CLKH-NWEH)}$	FMC_CLK high to FMC_NWE high		$T_{fmc_ker_ck}$ +1	-	
$t_{d(CLKL-ADV)}$	FMC_CLK low to to FMC_AD[15:0] valid		-	2.5	
$t_{d(CLKL-ADIV)}$	FMC_CLK low to FMC_AD[15:0] invalid		0	-	
$t_{d(CLKL-DATA)}$	FMC_A/D[15:0] valid data after FMC_CLK low		-	3.5	
$t_{d(CLKL-NBLL)}$	FMC_CLK low to FMC_NBL low		-	2	
$t_{d(CLKH-NBLH)}$	FMC_CLK high to FMC_NBL high		$T_{fmc_ker_ck}$ +0.5	-	
$t_{su(NWAIT-CLKH)}$	FMC_NWAIT valid before FMC_CLK high		3	-	
$t_{h(CLKH-NWAIT)}$	FMC_NWAIT valid after FMC_CLK high		2.5	-	

1. Guaranteed by characterization results.

Figure 33. Synchronous multiplexed PSRAM write timings

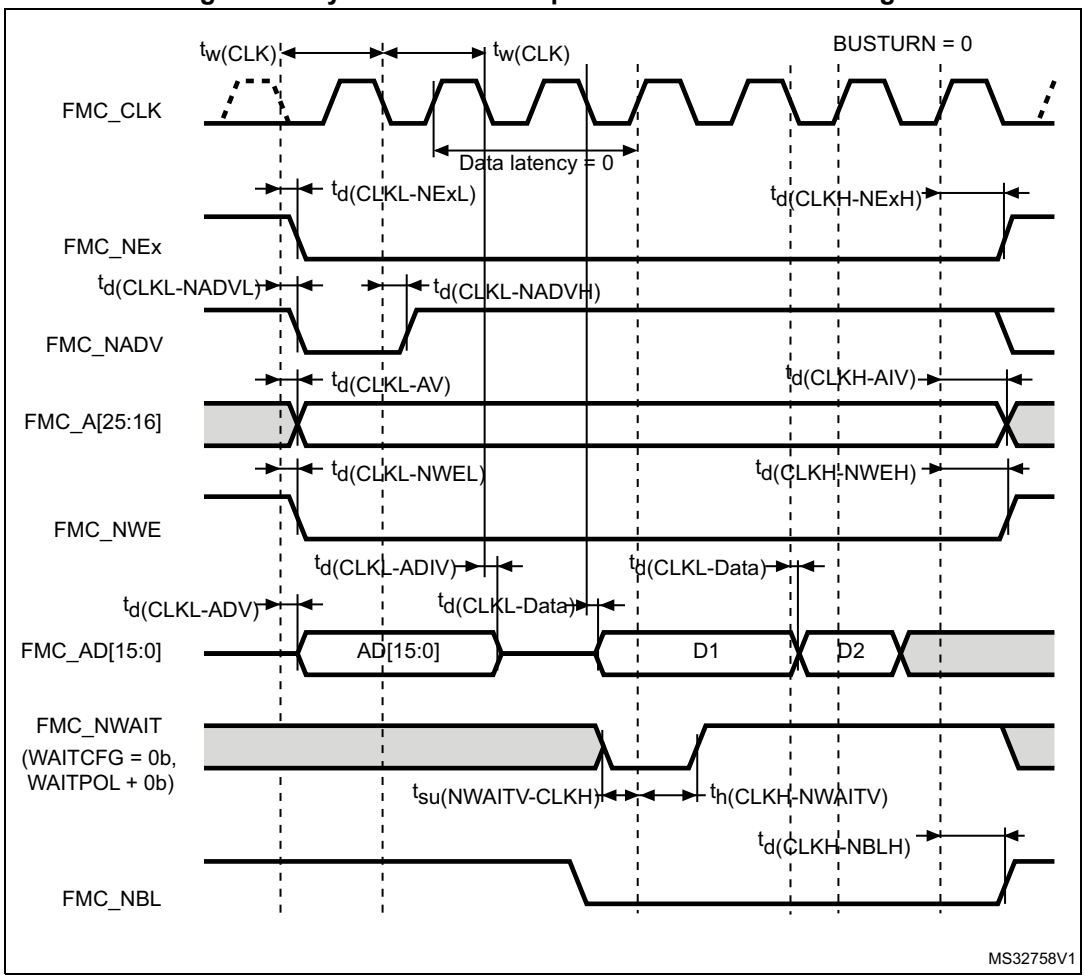

NAND controller waveforms and timings

Figure 34 through *Figure 37* represent synchronous waveforms, and *Table 73* and *Table 74* provide the corresponding timings. The results shown in this table are obtained with the following FMC configuration and a capacitive load (C_L) of 30 pF:

- COM.FMC_SetupTime = 0x01
- COM.FMC_WaitSetupTime = 0x03
- COM.FMC_HoldSetupTime = 0x02
- COM.FMC_HiZSetupTime = 0x01
- ATT.FMC_SetupTime = 0x01
- ATT.FMC_WaitSetupTime = 0x03
- ATT.FMC_HoldSetupTime = 0x02
- ATT.FMC_HiZSetupTime = 0x01
- Bank = FMC_Bank_NAND
- MemoryDataWidth = FMC_MemoryDataWidth_16b
- ECC = FMC_ECC_Enable
- ECCPageSize = FMC_ECCPageSize_512Bytes
- TCLRSetupTime = 0
- TARSetupTime = 0

In all timing tables, the $T_{fmc_ker_ck}$ is the fmc_ker_ck clock period.

Table 73. Switching characteristics for NAND flash read cycles(1)

Symbol	Parameter	Min	Max	Unit
$t_{w(N0E)}$	FMC_NOE low width	$4T_{fmc_ker_ck} - 0.5$	$4T_{fmc_ker_ck}+0.5$	ns
$t_{su(D-NOE)}$	FMC_D[15-0] valid data before FMC_NOE high	11	-	
$t_{h(NOE-D)}$	FMC_D[15-0] valid data after FMC_NOE high	0	-	
$t_{d(ALE-NOE)}$	FMC_ALE valid before FMC_NOE low	-	$3T_{fmc_ker_ck}+0.5$	
$t_{h(NOE-ALE)}$	FMC_NWE high to FMC_ALE invalid	$4T_{fmc_ker_ck}-1$	-	

1. Guaranteed by characterization results.

Figure 34. NAND controller waveforms for read access

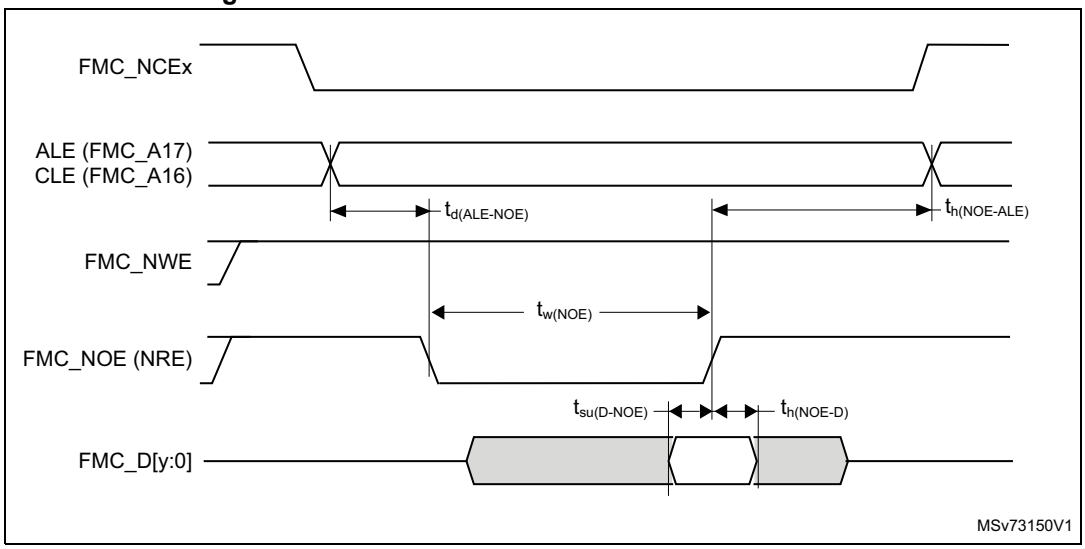

1. y = 7 or 15 depending on the NAND flash memory interface.

Table 74. Switching characteristics for NAND flash write cycles(1)

Symbol	Parameter	Min	Max	Unit
$t_{w(NWE)}$	FMC_NWE low width	$4T_{fmc_ker_ck} - 0.5$	$4T_{fmc_ker_ck} + 0.5$	ns
$t_{v(NWE-D)}$	FMC_NWE low to FMC_D[15-0] valid	0	-	
$t_{h(NWE-D)}$	FMC_NWE high to FMC_D[15-0] invalid	$2T_{fmc_ker_ck} + 1.5$	-	
$t_{d(D-NWE)}$	FMC_D[15-0] valid before FMC_NWE high	$5T_{fmc_ker_ck} - 5$	-	
$t_{d(ALE-NWE)}$	FMC_ALE valid before FMC_NWE low	-	$3T_{fmc_ker_ck} + 0.5$	
$t_{h(NWE-ALE)}$	FMC_NWE high to FMC_ALE invalid	$2T_{fmc_ker_ck} - 0.5$	-	

1. Guaranteed by characterization results.

Figure 35. NAND controller waveforms for write access

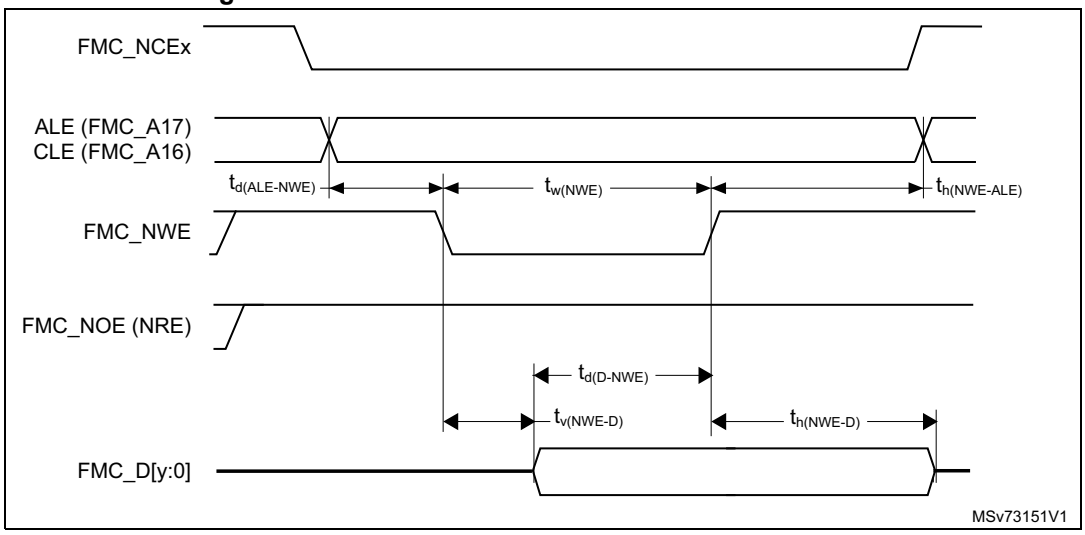

1. y = 7 or 15 depending on the NAND flash memory interface.

SDRAM waveforms and timings

In all timing tables, the TKERCK is the fmc_ker_ck clock period, with the following FMC_SDCLK maximum values:

- For 2.7 V<V_{DD}<3.6 V: maximum FMC_CLK = 95 MHz at 20 pF
- For 1.8 V<V_{DD}<1.9 V: maximum FMC_CLK = 90 MHz at 20 pF
- For 1.62 V<$_{DD}$<1.8 V: maximum FMC_CLK = 85 MHz at 15 pF

Table 75. SDRAM read timings(1)

Symbol	Parameter	Min	Max	Unit
$t_{w(SDCLK)}$	FMC_SDCLK period	$2T_{fmc_ker_ck} - 0.5$	$2T_{fmc_ker_ck} + 0.5$	ns
$t_{su(SDCLKH_Data)}$	Data input setup time	3	-	
$t_{h(SDCLKH_Data)}$	Data input hold time	1.5	-	
$t_{d(SDCLKL_Add)}$	Address valid time	-	2.0	
$t_{d(SDCLKL-SDNE)}$	Chip select valid time	-	1.5(2)	
$t_{h(SDCLKL_SDNE)}$	Chip select hold time	0	-	
$t_{d(SDCLKL_SDNRAS)}$	SDNRAS valid time	-	1	
$t_{h(SDCLKL_SDNRAS)}$	SDNRAS hold time	0	-	
$t_{d(SDCLKL_SDNCAS)}$	SDNCAS valid time	-	2.0	
$t_{h(SDCLKL_SDNCAS)}$	SDNCAS hold time	0.5	-	

1. Guaranteed by characterization results.
2. Using PC2_C I/O adds 4.5 ns to this timing.

Table 76. LPSDR SDRAM read timings(1)

Symbol	Parameter	Min	Max	Unit
$t_{W(SDCLK)}$	FMC_SDCLK period	$2T_{fmc_ker_ck} - 0.5$	$2T_{fmc_ker_ck}+0.5$	ns
$t_{su(SDCLKH_Data)}$	Data input setup time	3	-	
$t_{h(SDCLKH_Data)}$	Data input hold time	2.5	-	
$t_{d(SDCLKL_Add)}$	Address valid time	-	2	
$t_{d(SDCLKL_SDNE)}$	Chip select valid time	-	1.5(2)(3)	
$t_{h(SDCLKL_SDNE)}$	Chip select hold time	0	-	
$t_{d(SDCLKL_SDNRAS}$	SDNRAS valid time	-	1	
$t_{h(SDCLKL_SDNRAS)}$	SDNRAS hold time	0	-	
$t_{d(SDCLKL_SDNCAS)}$	SDNCAS valid time	-	2	
$t_{h(SDCLKL_SDNCAS)}$	SDNCAS hold time	0.5	-	

1. Guaranteed by characterization results.
2. Using PC2 I/O adds 4 ns to this timing.
3. Using PC2_C I/O adds 16.5 ns to this timing.

Figure 36. SDRAM read access waveforms (CL = 1)

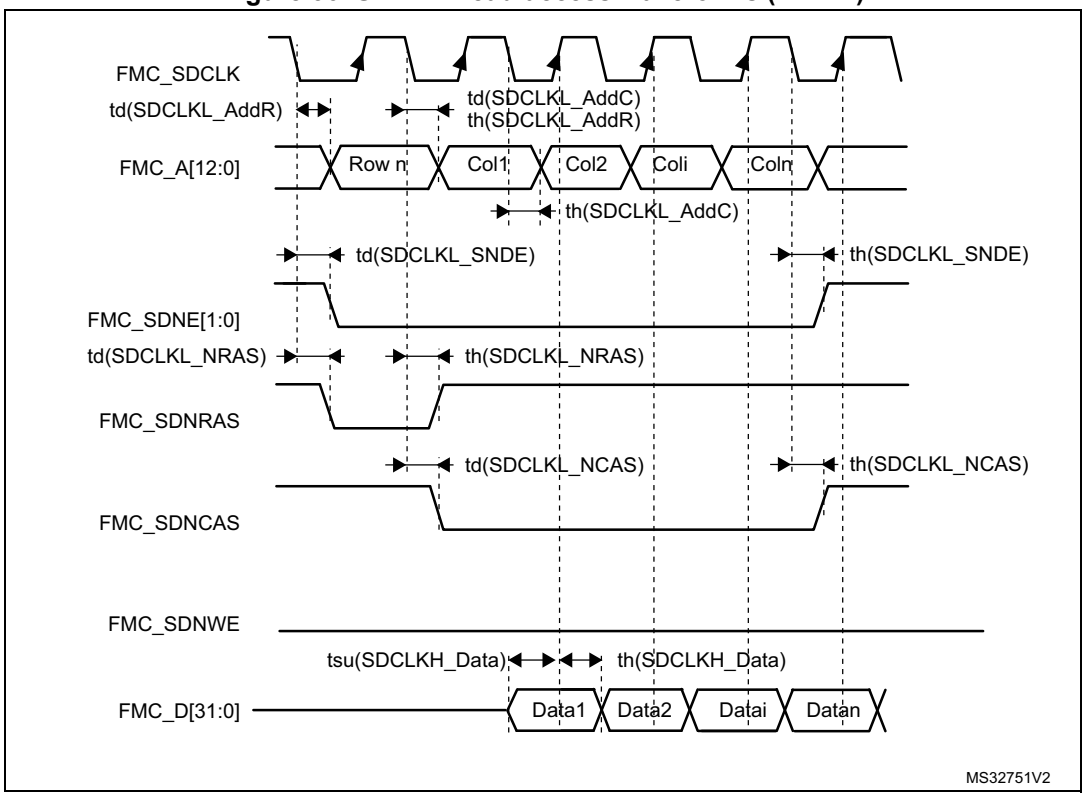

Table 77. SDRAM Write timings(1)

Symbol	Parameter	Min	Max	Unit
$t_{w(SDCLK)}$	FMC_SDCLK period	$2T_{fmc_ker_ck} - 0.5$	$2T_{fmc_ker_ck}+0.5$	ns
$t_{d(SDCLKL_Data)}$	Data output valid time	-	2	
$t_{h(SDCLKL_Data)}$	Data output hold time	0.5	-	
$t_{d(SDCLKL_Add)}$	Address valid time	-	2	
$t_{d(SDCLKL_SDNWE)}$	SDNWE valid time	-	2	
$t_{h(SDCLKL_SDNWE)}$	SDNWE hold time	0	-	
$t_{d(SDCLKL_SDNE)}$	Chip select valid time	-	1.5(2)	
$t_{h(SDCLKL-_SDNE)}$	Chip select hold time	0	-	
$t_{d(SDCLKL_SDNRAS)}$	SDNRAS valid time	-	1	
$t_{h(SDCLKL_SDNRAS)}$	SDNRAS hold time	0	-	
$t_{d(SDCLKL_SDNCAS)}$	SDNCAS valid time	-	2	
$t_{d(SDCLKL_SDNCAS)}$	SDNCAS hold time	0.5	-	

1. Guaranteed by characterization results.
2. Using PC2_C I/O adds 4.5 ns to this timing.

Table 78. LPSDR SDRAM Write timings(1)

Symbol	Parameter	Min	Max	Unit
$t_{w(SDCLK)}$	FMC_SDCLK period	$2T_{fmc_ker_ck} - 0.5$	$2T_{fmc_ker_ck}+0.5$	ns
$t_{d(SDCLKL_Data)}$	Data output valid time	-	2	
$t_{h(SDCLKL_Data)}$	Data output hold time	0	-	
$t_{d(SDCLKL_Add)}$	Address valid time	-	2.5	
$t_{d(SDCLKL-SDNWE)}$	SDNWE valid time	-	2	
$t_{h(SDCLKL-SDNWE)}$	SDNWE hold time	0	-	
$t_{d(SDCLKL-\ SDNE)}$	Chip select valid time	-	1.5(2)(3)	
$t_{h(SDCLKL-\ SDNE)}$	Chip select hold time	0	-	
$t_{d(SDCLKL-SDNRAS)}$	SDNRAS valid time	-	1	
$t_{h(SDCLKL-SDNRAS)}$	SDNRAS hold time	0	-	
$t_{d(SDCLKL-SDNCAS)}$	SDNCAS valid time	-	2	
$t_{d(SDCLKL-SDNCAS)}$	SDNCAS hold time	0.5	-	

1. Guaranteed by characterization results.
2. Using PC2 I/O adds 4 ns to this timing.
3. Using PC2_C I/O adds 16.5 ns to this timing.

Figure 37. SDRAM write access waveforms

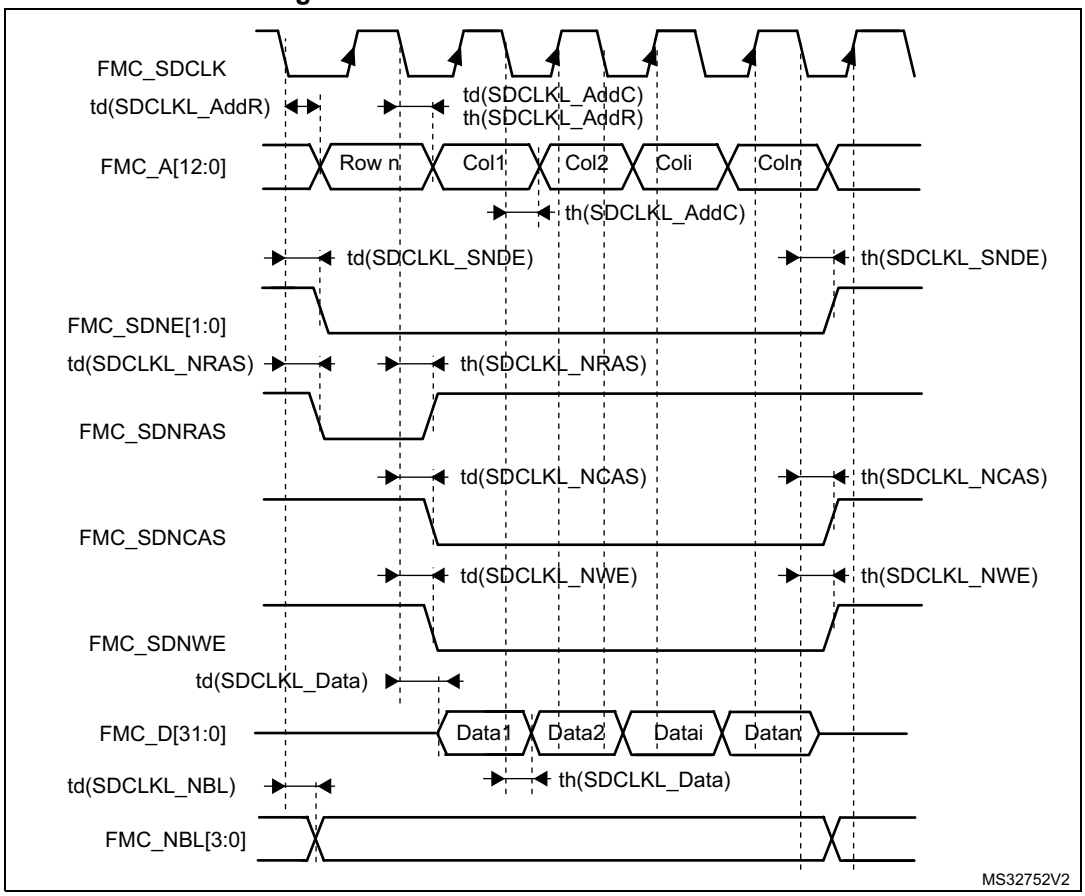

6.3.20 Octo-SPI interface characteristics

Unless otherwise specified, the parameters given in *Table 79* and *Table 81* for OCTOSPI are derived from tests performed under the ambient temperature, f_{HCLK} frequency and V_{DD} supply voltage conditions summarized in *Table 12: General operating conditions*, with the following configuration:

- Output speed is set to OSPEEDRy[1:0] = 11
- Measurement points are done at CMOS levels: $0.5V_{DD}$
- IO Compensation cell activated.
- HSLV activated when $V_{DD} \leq 2.5$ V
- VOS level set to VOS0

Refer to *Section 6.3.17: I/O port characteristics* for more details on the input/output alternate function characteristics.

Table 79. OCTOSPI characteristics in SDR mode(1)(2)

Symbol	Parameter	Conditions	Min	Typ	Max	Unit
$F_{(CLK)}$	OCTOSPI clock frequency	1.71 V < V_{DD} < 3.6 V, VOS0, C_{LOAD} = 15 pF	-	-	92	MHz
		1.71 V < V_{DD} < 3.6 V, VOS0, C_{LOAD} =20 pF	-	-	90	
		2.7 V < V_{DD} < 3.6 V, VOS0, C_{LOAD} = 20 pF	-	-	140	
$t_{w(CKH)}$	OCTOSPI clock high and low time, even division	PRESCALER[7:0] = n = 0,1,3,5	$t_{(CK)}/2$	-	$t_{(CK)}/2+1$	ns
$t_{w(CKL)}$			$t_{(CK)}/2–1$	-	$t_{(CK)}/2$	
$t_{w(CKH)}$	OCTOSPI clock high and low time, odd division	PRESCALER[7:0] = n = 2,4,6,8	$(n/2)*t_{(CK)}/(n+1)$	-	$(n/2)*t_{(CK)}/(n+1)+1$	
$t_{w(CKL)}$			$(n/2+1)*t_{(CK)}/(n+1)–1$	-	$(n/2+1)*t_{(CK)}/(n+1)$	
$t_{s(IN)}$(3)	Data input setup time	-	3.0	-	-	
$t_{h(IN)}$(3)	Data input hold time	-	1.5	-	-	
$t_{v(OUT)}$	Data output valid time	-	-	0.5	1(4)	
$t_{h(OUT)}$	Data output hold time	-	0	-	-	

1. All values apply to Octal and Quad-SPI mode.
2. Guaranteed by characterization results.
3. Delay block bypassed.
4. Using PC2 or PC3 I/O in the data bus adds 4 ns to this timing value.

Figure 38. OCTOSPI SDR read/write timing diagram

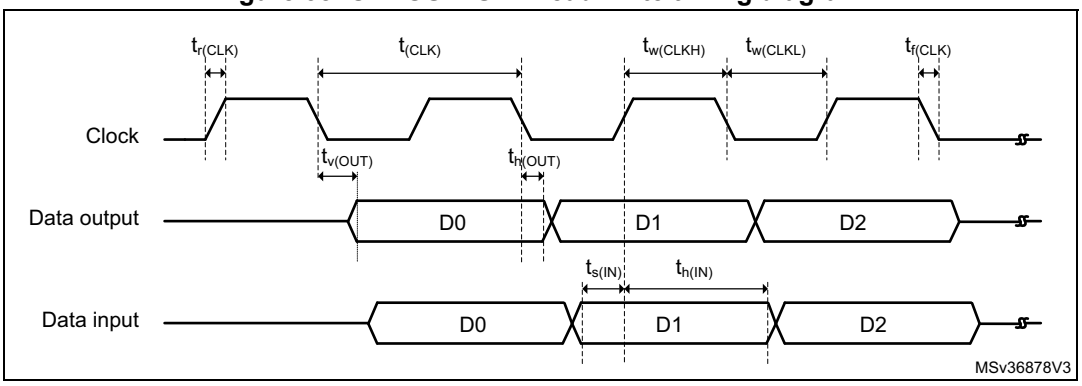

Table 80. OCTOSPI characteristics in DTR mode (no DQS)(1)(2)

Symbol	Parameter	Conditions	Min	Typ	Max	Unit
F_{CK}(3)	OCTOSPI clock frequency	1.71 V < V_{DD} < 3.6 V, VOS0, C_{LOAD} = 15 pF	-	-	90(4)	MHz
		1.71 V < V_{DD} < 3.6 V, VOS0, C_{LOAD} = 20 pF	-	-	87(4)	
		2.7 V < V_{DD} < 3.6 V, VOS0, C_{LOAD} = 20 pF	-	-	110	
$t_{w(CKH)}$	OCTOSPI clock high and low time, even division	PRESCALER[7:0] = n = 0,1,3,5	$t_{(CK)}$/2	-	$t_{(CK)}$/2+1	ns
$t_{w(CKL)}$			$t_{(CK)}$/2–1	-	$t_{(CK)}$/2	
$t_{w(CKH)}$	OCTOSPI clock high and low time, odd division	PRESCALER[7:0] = n = 2,4,6,8	(n/2)*$t_{(CK)}$/(n+1)	-	(n/2)*$t_{(CK)}$/(n+1)+1	
$t_{w(CKL)}$			(n/2+1)*$t_{(CK)}$/(n+1) – 1	-	(n/2+1)* $t_{(CK)}$/(n+1)	
$t_{sr(IN)}$ $t_{sf(IN)}$(5)	Data input setup time	-	3.0	-	-	
$t_{hr(IN)}$ $t_{hf(IN)}$(5)	Data input hold time	-	1.50	-	-	
$t_{vr(OUT)}$ $t_{vf(OUT)}$	Data output valid time	DHQC = 0	-	6	7(6)	
		DHQC = 1, Prescaler = 1,2 ...	-	t_{pclk}/4+1	t_{pclk}/4+1.25 (6)	
thr(OUT) thf(OUT)	Data output hold time	DHQC = 0	4.5	-	-	
		DHQC = 1, Prescaler = 1,2 ...	t_{pclk}/4	-	-	

1. All values apply to Octal and Quad-SPI mode.
2. Guaranteed by characterization results.
3. DHQC must be set to reach the mentioned frequency.
4. Using PC2 or PC3 I/O in the data bus decreases the frequency to 47 MHz.
5. Delay block bypassed.
6. Using PC2 or PC3 I/O in the data bus adds 4 ns to this timing value.

Figure 39. OCTOSPI DTR mode timing diagram

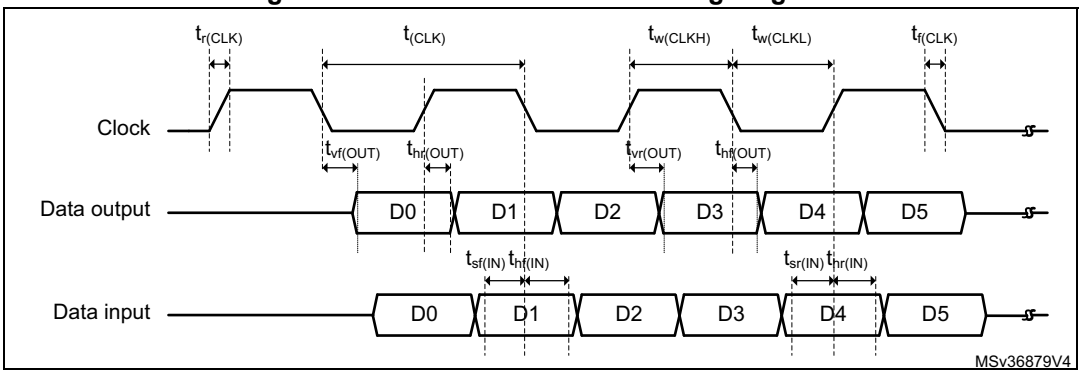

Table 81. OCTOSPI characteristics in DTR mode (with DQS)/Octal and Hyperbus(1)

Symbol	Parameter	Conditions	Min	Typ	Max	Unit
F_{CK}(2)(3)	OCTOSPI clock frequency	2,7 V < V_{DD} < 3.6 V, VOS0, C_{LOAD} = 20 pF	-	-	100	MHz
		1.71 V < V_{DD} < 3.6 V, VOS0, C_{LOAD} = 20 pF	-	-	100(4)	
$t_{w(CKH)}$	OCTOSPI clock high and low time, even division	PRESCALER[7:0] = n = 0,1,3,5	$t_{(CK)}$/2	-	$t_{(CK)}$/2+1	ns
$t_{w(CKL)}$			$t_{(CK)}$/2–1	-	$t_{(CK)}$/2	
$t_{w(CKH)}$	OCTOSPI clock high and low time, odd division	PRESCALER[7:0] = n = 2,4,6,8	(n/2)*$t_{(CK)}$/(n+1)	-	(n/2)*$t_{(CK)}$/(n+1)+1	ns
$t_{w(CKL)}$			(n/2+1)*$t_{(CK)}$/(n+1)–1	-	(n/2+1)*$t_{(CK)}$/(n+1)	
$t_{v(CK)}$	Clock valid time	-	-	-	$t_{(CK)}$+1	
$t_{h(CK)}$	Clock hold time	-	$t_{(CK)}$/2	-	-	
$V_{ODr(CK)}$	CK,$\overline{CK}$ crossing level on CK rising edge	VDD = 1.8 V	922	-	1229	mV
$V_{ODf(CK)}$	CK,$\overline{CK}$ crossing level on CK falling edge	VDD = 1.8 V	1000	-	1277	
$t_{w(CS)}$	Chip select high time	-	3*$t_{(CK)}$	-	-	ns
$t_{v(DQ)}$	Data input vallid time	-	0	-	-	
$t_{v(DS)}$	Data strobe input valid time	-	0	-	-	
$t_{h(DS)}$	Data strobe input hold time	-	0	-	-	
$t_{v(RWDS)}$	Data strobe output valid time	-	-	-	3 x $t_{(CK)}$	
$t_{sr(DQ)}$	Data input setup time	Rising edge	0	-	-	
$t_{sf(DQ)}$		Falling edge	0	-	-	
$t_{hr(DQ)}$	Data input hold time	Rising edge	1	-	-	
$t_{hf(DQ)}$		Falling edge	1	-	-	
$t_{vr(OUT)}$	Data output valid time rising edge	DHQC = 0	-	6	7(5)	
		DHQC = 1, Prescaler = 1,2...	-	t_{pclk}/4+1	t_{pclk}/4+1.25(5)	
$t_{vf(OUT)}$	Data output valid time falling edge	DHQC = 0	-	5.5	6(5)	
		DHQC = 1, Prescaler = 1,2...	-	t_{pclk}/4+0.5	t_{pclk}/4+0.75(5)	
$t_{hr(OUT)}$	Data output hold time rising edge	DHQC = 0	4.5	-	-	
		DHQC = 1, Prescaler = 1,2...	t_{pclk}/4	-	-	
$t_{hf(OUT)}$	Data output hold time falling edge	DHQC = 0	4.5	-	-	
		DHQC = 1, Prescaler = 1,2...	t_{pclk}/4	-	-	

1. Guaranteed by characterization results.

2. Maximum frequency values are given for a RWDS to DQ skew of maximum +/-1.0 ns.
3. Activating DHQC is mandatory to reach this frequency
4. Using PC2 or PC3 I/O on data bus decreases the frequency to 47 MHz.
5. Using PC2 or PC3 I/O on the data bus adds 4 ns to this timing value.

Figure 40. OCTOSPI Hyperbus clock timing diagram

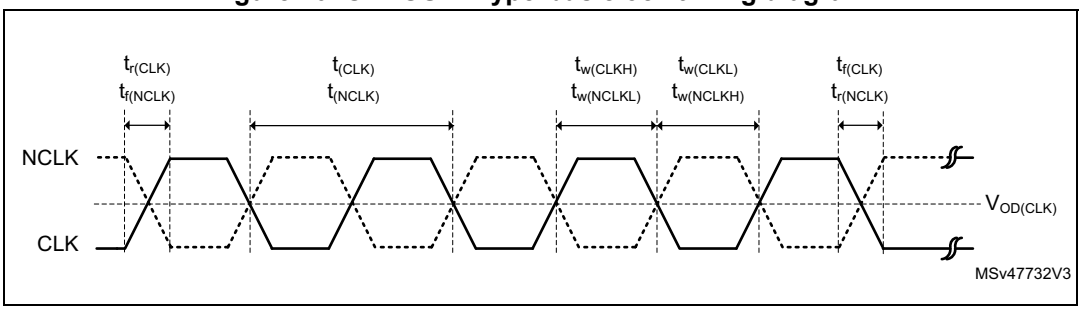

Figure 41. OCTOSPI Hyperbus read timing diagram

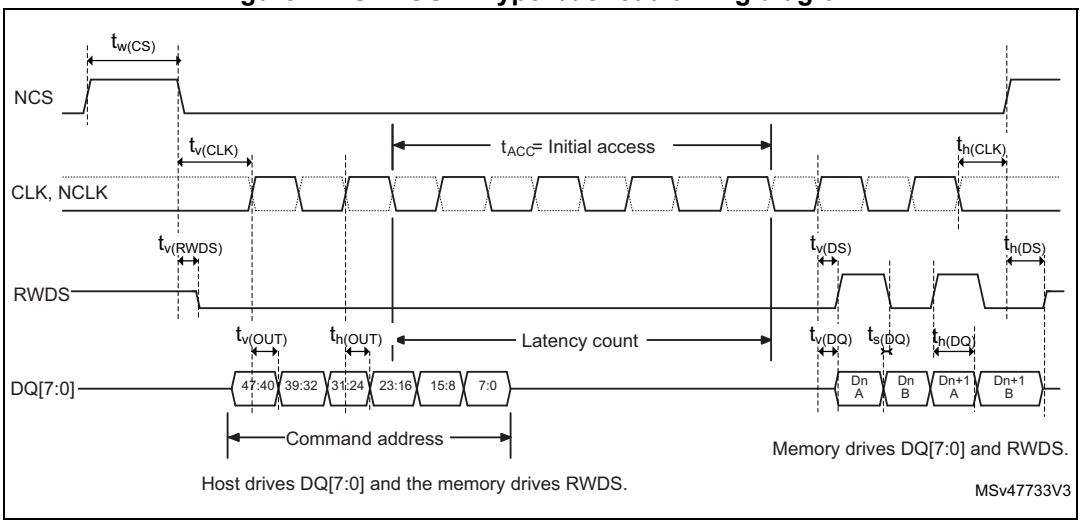

Figure 42. OCTOSPI Hyperbus write timing diagram

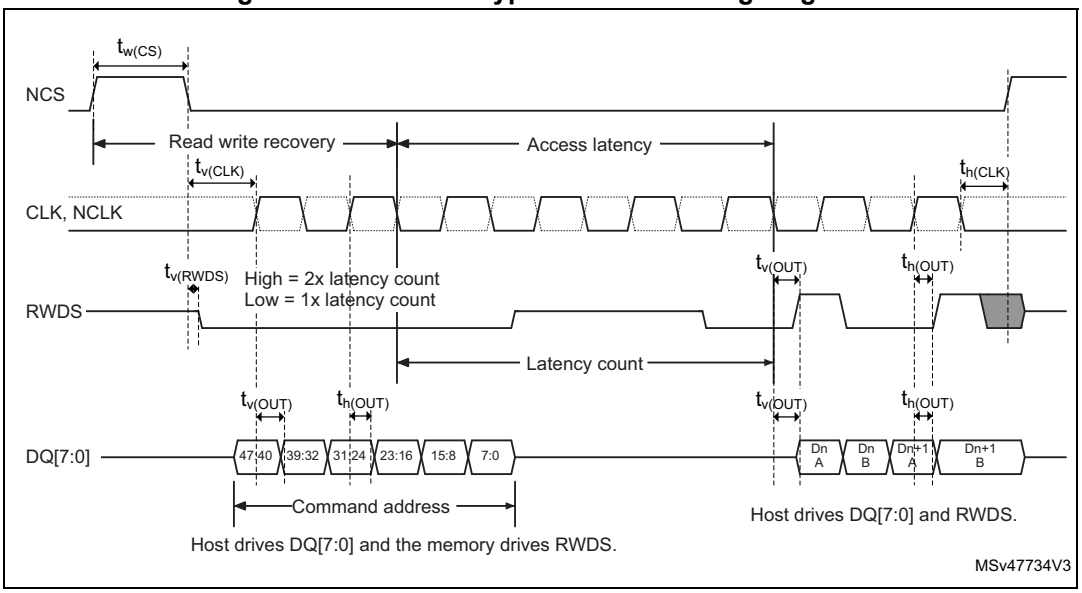

6.3.21 Delay block (DLYB) characteristics

Unless otherwise specified, the parameters given in *Table 82* for Delay Block are derived from tests performed under the ambient temperature, $f_{rcc_c_ck}$ frequency and VDD supply voltage summarized in *Table 12: General operating conditions*, with the following configuration:

Table 82. Delay Block characteristics

Symbol	Parameter	Conditions	Min	Typ	Max	Unit
t_{init}	Initial delay	-	900	1300	1900	ps
t_{Δ}	Unit Delay	-	28	33	41	-

6.3.22 16-bit ADC characteristics

Unless otherwise specified, the parameters given in *Table 83*, *Table 84* and *Table 85* are derived from tests performed under the ambient temperature, f_{PCLK2} frequency and V_{DDA} supply voltage conditions summarized in *Table 12: General operating conditions*.

Table 83. 16-bit ADC characteristics(1)(2)

Symbol	Parameter	Conditions	Min	Typ	Max	Unit
V_{DDA}	Analog supply voltage for ADC ON	-	1.62	-	3.6	V
V_{REF+}	Positive reference voltage	$V_{DDA} \geq 2$ V	1.62	-	V_{DDA}	
		$V_{DDA} < 2$ V	V_{DDA}			
V_{REF-}	Negative reference voltage	-	V_{SSA}			

Table 83. 16-bit ADC characteristics(1)(2) (continued)

Symbol	Parameter	Conditions				Min	Typ	Max	Unit
f_{ADC}	ADC clock frequency	1.62 V ≤ VDDA ≤ 3.6 V			BOOST = 11	0.12	-	50	MHz
					BOOST = 10	0.12	-	25	
					BOOST = 01	0.12	-	12.5	
					BOOST = 00	-	-	6.25	
f_s(3)	Sampling rate for Direct channels	Resolution = 16 bits, V_{DDA} >2.5 V	T_J = 90 °C	f_{ADC} = 36 MHz	SMP = 1.5	-	-	3.60	MSps
		Resolution = 16 bits		f_{ADC} = 37 MHz	SMP = 2.5	-	-	3.35	
		Resolution = 14 bits	T_J = 125 °C	f_{ADC} = 50 MHz	SMP = 2.5	-	-	5.00	
		Resolution = 12 bits		f_{ADC} = 50 MHz	SMP = 2.5	-	-	5.50	
		Resolution = 10 bits		f_{ADC} = 50 MHz	SMP = 1.5	-	-	7.10	
		Resolution = 8 bits		f_{ADC} = 50 MHz	SMP = 1.5	-	-	8.30	
		Resolution = 14 bits	T_J = 140 °C	f_{ADC} = 49 MHz	SMP = 1.5	-	-	4.90	
		Resolution = 12 bits		f_{ADC} = 50 MHz	SMP = 1.5	-	-	5.50	
		Resolution = 10 bits		f_{ADC} = 50 MHz	SMP = 1.5	-	-	6.70	
		Resolution = 8 bits		f_{ADC} = 50 MHz	SMP = 1.5	-	-	8.30	
	Sampling rate for Fast channels	Resolution = 16 bits, V_{DDA} >2.5 V	T_J = 90 °C	f_{ADC} = 32 MHz	SMP = 2.5	-	-	2.90	
		Resolution = 16 bits		f_{ADC} = 31 MHz	SMP = 2.5	-	-	2.80	
		Resolution = 14 bits	T_J = 125 °C	f_{ADC} = 33 MHz	SMP = 2.5	-	-	3.30	
		Resolution = 12 bits		f_{ADC} = 39 MHz	SMP = 2.5	-	-	4.30	
		Resolution = 10 bits		f_{ADC} = 48 MHz	SMP = 2.5	-	-	6.00	
		Resolution = 8 bits		f_{ADC} = 50 MHz	SMP = 2.5	-	-	7.10	
		Resolution = 12 bits	T_J = 140 °C	f_{ADC} = 37 MHz	SMP = 2.5	-	-	4.10	
		Resolution = 10 bits		f_{ADC} = 46 MHz	SMP = 2.5	-	-	5.70	
		Resolution = 8 bits		f_{ADC} = 50 MHz	SMP = 2.5	-	-	7.10	
	Sampling rate for Slow channels(4)	Resolution = 16 bits	T_J = 90 °C			-	-	1.00	
		resolution = 14 bits	T_J = 125 °C			-	-		
		resolution = 12 bits				-	-		
		resolution = 10 bits				-	-		
		resolution = 8 bits				-	-		
		resolution = 12 bits	T_J = 140 °C			-	-		
		resolution = 10 bits				-	-		
		resolution = 8 bits				-	-		
V_{AIN}(5)	Conversion voltage range	-				0	-	V_{REF+}	V
V_{CMIV}	Common mode input voltage	-				V_{REF}/2 − 10%	V_{REF}/2	V_{REF}/2 + 10%	V

Table 83. 16-bit ADC characteristics(1)(2) (continued)

Symbol	Parameter	Conditions			Min	Typ	Max	Unit
R_{AIN}(6)	External input impedance	Resolution = 16 bits, T_J = 125 °C	-	-	-	-	170	Ω
		Resolution = 14 bits, T_J = 125 °C	-	-	-	-	435	
		Resolution = 12 bits, T_J =125 °C	-	-	-	-	1,150	
		Resolution = 10 bits, T_J = 125 °C	-	-	-	-	5,650	
		Resolution = 8 bits, T_J = 125 °C	-	-	-	-	26,500	
C_{ADC}	Internal sample and hold capacitor	-			-	4	-	pF
$t_{ADCVREG_STUP}$	ADC LDO startup time	-			-	5	10	us
t_{STAB}	ADC Power-up time	LDO already started			1	-	-	conversion cycle
t_{CAL}	Offset and linearity calibration time	-			16,5010			$1/f_{ADC}$
t_{OFF_CAL}	Offset calibration time	-			1,280			$1/f_{ADC}$
t_{LATR}	Trigger conversion latency regular and injected channels without conversion abort	CKMODE = 00			1.5	2	2.5	$1/f_{ADC}$
		CKMODE = 01			-	-	2.5	
		CKMODE = 10			-	-	2.5	
		CKMODE = 11			-	-	2.25	
$t_{LATRINJ}$	Trigger conversion latency regular injected channels aborting a regular conversion	CKMODE = 00			2.5	3	3.5	$1/f_{ADC}$
		CKMODE = 01			-	-	3.5	
		CKMODE = 10			-	-	3.5	
		CKMODE = 11			-	-	3.25	
t_S	Sampling time	-			1.5	-	810.5	$1/f_{ADC}$
t_{CONV}	Total conversion time (including sampling time)	Resolution = N bits			ts + 0.5 + N/2	-	-	$1/f_{ADC}$
t_{TRIG}	External trigger period	-			t_{CONV}	-	-	$1/f_{ADC}$

Table 83. 16-bit ADC characteristics(1)(2) (continued)

Symbol	Parameter	Conditions			Min	Typ	Max	Unit
I_{DDA_D} (ADC)	ADC consumption on V_{DDA}, BOOST=11, Differential mode	Resolution = 16 bits, f_{ADC} = 25 MHz	-	-	-	1,440	-	µA
		Resolution = 14 bits, f_{ADC} = 30 MHz	-	-	-	1,350	-	
		Resolution = 12 bits, f_{ADC} = 40 MHz	-	-	-	990	-	
	ADC consumption on V_{DDA}, BOOST=10, Differential mode, f_{ADC} = 25 MHz	Resolution = 16 bits	-	-	-	1,080	-	
		Resolution = 14 bits	-	-	-	810	-	
		Resolution = 12 bits	-	-	-	585	-	
	ADC consumption on V_{DDA}, BOOST=01, Differential mode, f_{ADC} = 12.5 MHz	Resolution = 16 bits	-	-	-	630	-	
		Resolution = 14 bits	-	-	-	432	-	
		Resolution = 12 bits	-	-	-	315	-	
	ADC consumption on V_{DDA}, BOOST=00, Differential mode, f_{ADC} = 6.25 MHz	Resolution = 16 bits	-	-	-	360	-	
		Resolution = 14 bits	-	-	-	270	-	
		Resolution = 12 bits	-	-	-	225	-	
I_{DDA_SE} (ADC)	ADC consumption on V_{DDA}, BOOST=11, Single-ended mode	Resolution = 16 bits, f_{ADC}=25 MHz	-	-	-	720	-	
		Resolution = 14 bits, f_{ADC}=30 MHz	-	-	-	675	-	
		Resolution = 12 bits, f_{ADC}=40 MHz	-	-	-	495	-	
	ADC consumption on V_{DDA}, BOOST=10, Singl-ended mode, f_{ADC} = 25 MHz	Resolution = 16 bits	-	-	-	540	-	
		Resolution = 14 bits	-	-	-	405	-	
		Resolution = 12 bits	-	-	-	292.5	-	
	ADC consumption on V_{DDA}, BOOST=01, Single-ended mode, f_{ADC} = 12.5 MHz	Resolution = 16 bits	-	-	-	315	-	
		Resolution = 14 bits	-	-	-	216	-	
		Resolution = 12 bits	-	-	-	157.5	-	
	ADC consumption on V_{DDA} BOOST=00, Single-ended mode f_{ADC}=6.25 MHz	Resolution = 16 bits	-	-	-	180	-	
		Resolution = 14 bits	-	-	-	135	-	
		Resolution = 12 bits	-	-	-	112.5	-	
I_{DD} (ADC)	ADC consumption on V_{DD}	f_{ADC}=50 MHz	-	-	-	400	-	
		f_{ADC}=25 MHz	-	-	-	220	-	
		f_{ADC}=12.5 MHz	-	-	-	180	-	
		f_{ADC}=6.25 MHz	-	-	-	120	-	
		f_{ADC}=3.125 MHz	-	-	-	80	-	

1. Guaranteed by design.
2. The voltage booster on ADC switches must be used for V_{DDA} < 2.4 V (embedded I/O switches).
3. These values are valid for TFBGA100, UFBGA169 and UFBGA176+25 packages and one ADC. The values for other packages and multiple ADCs may be different.
4. For slow channels, the performance should be limited to 1 Msps what ever the value of f_{ADC}.

5. Depending on the package, V_{REF+} can be internally connected to V_{DDA} and V_{REF-} to V_{SSA}.
6. The tolerance is 10 LSBs for 16-bit resolution, 4 LSBs for 14-bit resolution, and 2 LSBs for 12-bit, 10-bit and 8-bit resolutions.

Table 84. Minimum sampling time vs R_{AIN} (16-bit ADC)(1)(2)

Resolution	RAIN (Ω)	Minimum sampling time (s)		
		Direct channels(3)	Fast channels(4)	Slow channels(5)
16 bits	47	7.37E-08	1.14E-07	1.72E-07
14 bits	47	6.29E-08	9.74E-08	1.55E-07
	68	6.84E-08	1.02E-07	1.58E-07
	100	7.80E-08	1.12E-07	1.62E-07
	150	9.86E-08	1.32E-07	1.80E-07
	220	1.32E-07	1.61E-07	2.01E-07
12 bits	47	5.32E-08	8.00E-08	1.29E-07
	68	5.74E-08	8.50E-08	1.32E-07
	100	6.58E-08	9.31E-08	1.40E-07
	150	8.37E-08	1.10E-07	1.51E-07
	220	1.11E-07	1.34E-07	1.73E-07
	330	1.56E-07	1.78E-07	2.14E-07
	470	2.16E-07	2.39E-07	2.68E-07
	680	3.01E-07	3.29E-07	3.54E-07
10 bits	47	4.34E-08	6.51E-08	1.08E-07
	68	4.68E-08	6.89E-08	1.11E-07
	100	5.35E-08	7.55E-08	1.16E-07
	150	6.68E-08	8.77E-08	1.26E-07
	220	8.80E-08	1.08E-07	1.40E-07
	330	1.24E-07	1.43E-07	1.71E-07
	470	1.69E-07	1.89E-07	2.13E-07
	680	2.38E-07	2.60E-07	2.80E-07
	1000	3.45E-07	3.66E-07	3.84E-07
	1500	5.15E-07	5.35E-07	5.48E-07
	2200	7.42E-07	7.75E-07	7.78E-07
	3300	1.10E-06	1.14E-06	1.14E-06

Table 84. Minimum sampling time vs R_{AIN} (16-bit ADC)(1)(2) (continued)

Resolution	RAIN (Ω)	Minimum sampling time (s)		
		Direct channels(3)	Fast channels(4)	Slow channels(5)
8 bits	47	3.32E-08	5.10E-08	8.61E-08
	68	3.59E-08	5.35E-08	8.83E-08
	100	4.10E-08	5.83E-08	9.22E-08
	150	5.06E-08	6.76E-08	9.95E-08
	220	6.61E-08	8.22E-08	1.11E-07
	330	9.17E-08	1.08E-07	1.32E-07
	470	1.24E-07	1.40E-07	1.63E-07
	680	1.74E-07	1.91E-07	2.12E-07
	1000	2.53E-07	2.70E-07	2.85E-07
	1500	3.73E-07	3.93E-07	4.05E-07
	2200	5.39E-07	5.67E-07	5.75E-07
	3300	8.02E-07	8.36E-07	8.38E-07
	4700	1.13E-06	1.18E-06	1.18E-06
	6800	1.62E-06	1.69E-06	1.68E-06
	10000	2.36E-06	2.47E-06	2.45E-06
	15000	3.50E-06	3.69E-06	3.65E-06

1. Guaranteed by design.
2. Data valid at up to 130 °C, with a 47 pF PCB capacitor, and V_{DDA}=1.6 V.
3. Direct channels are connected to analog I/Os (PA0_C, PA1_C, PC2_C and PC3_C) to optimize ADC performance.
4. Fast channels correspond to PA6, PB1, PC4, PF11, PF13 for ADCx_INPx, and to PA7, PB0, PC5, PF12, PF14 for ADCx_INNx.
5. Slow channels correspond to all ADC inputs except for the Direct and Fast channels.

Table 85. 16-bit ADC accuracy(1)(2)

Symbol	Parameter	Conditions(3)		Min	Typ	Max	Unit
ET	Total undadjusted error	Direct channel	Single ended	-	+10/–20	-	LSB
			Differential	-	±15	-	
		Fast channel	Single ended	-	+10/–20	-	
			Differential	-	±15	-	
		Slow channel	Single ended	-	±10	-	
			Differential		±10	-	
EO	Offset error	-		-	±10	-	
EG	Gain error	-		-	±15	-	
ED	Differential linearity error	Single ended		-	+3/–1	-	
		Differential		-	+4.5/–1	-	
EL	Integral linearity error	Direct channel	Single ended	-	±11	-	
			Differential	-	±7	-	
		Fast channel	Single ended	-	±13	-	
			Differential	-	±7	-	
		Slow channel	Single ended	-	±10	-	
			Differential	-	±6	-	
ENOB	Effective number of bits	Single ended		-	12.2	-	Bits
		Differential		-	13.2	-	
SINAD	Signal-to-noise and distortion ratio	Single ended		-	75.2	-	dB
		Differential		-	81.2	-	
SNR	Signal-to-noise ratio	Single ended		-	77.0	-	
		Differential		-	81.0	-	
THD	Total harmonic distortion	Single ended		-	87	-	
		Differential		-	90	-	

1. Guaranteed by characterization results for BGA packages. The values for LQFP packages might differ.
2. ADC DC accuracy values are measured after internal calibration.
3. ADC clock frequency = 25 MHz, ADC resolution = 16 bits, V_{DDA}=V_{REF+}=3.3 V, BOOST=11 and 16-bit mode.

Note: ADC accuracy vs. negative injection current: injecting a negative current on any analog input pins should be avoided as this significantly reduces the accuracy of the conversion being performed on another analog input. It is recommended to add a Schottky diode (pin to ground) to analog pins which may potentially inject negative currents.

Any positive injection current within the limits specified for $I_{INJ(PIN)}$ and $\Sigma I_{INJ(PIN)}$ does not affect the ADC accuracy.

Figure 43. ADC accuracy characteristics

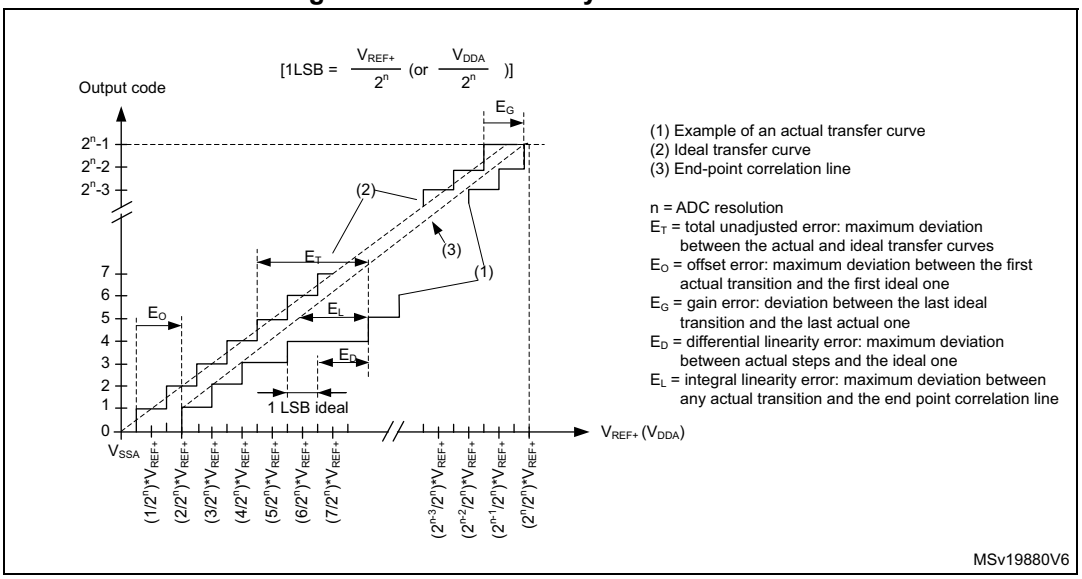

1. Example of an actual transfer curve.
2. Ideal transfer curve.
3. End point correlation line.
4. E_T = Total Unadjusted Error: maximum deviation between the actual and the ideal transfer curves.
   EO = Offset Error: deviation between the first actual transition and the first ideal one.
   EG = Gain Error: deviation between the last ideal transition and the last actual one.
   ED = Differential Linearity Error: maximum deviation between actual steps and the ideal one.
   EL = Integral Linearity Error: maximum deviation between any actual transition and the end point correlation line.

Figure 44. Typical connection diagram when using the ADC with FT/TT pins featuring analog switch function

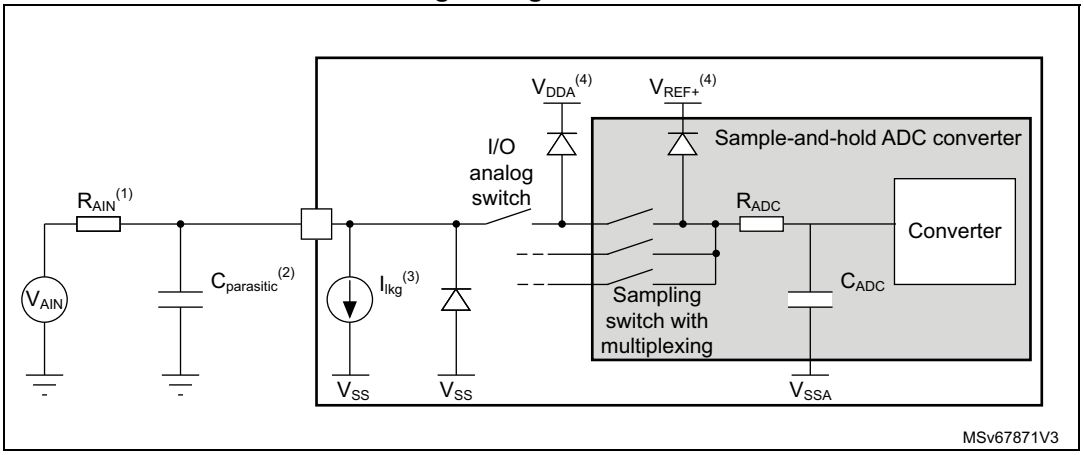

1. Refer to *Table 83: 16-bit ADC characteristics* for the values of R_{AIN} and C_{ADC}.
2. $C_{parasitic}$ represents the capacitance of the PCB (dependent on soldering and PCB layout quality) plus the pad capacitance (refer to *Table 54: I/O static characteristics*). A high $C_{parasitic}$ value downgrades conversion accuracy. To remedy this, f_{ADC} should be reduced.
3. Refer to *Table 54: I/O static characteristics* for the value of I_{lkg}.
4. Refer to *Figure 13: Power supply scheme*.

General PCB design guidelines

Power supply decoupling should be performed as shown in *Figure 45* or *Figure 46*, depending on whether V_{REF+} is connected to V_{DDA} or not. The 100 nF capacitors should be ceramic (good quality). They should be placed them as close as possible to the chip.

Figure 45. Power supply and reference decoupling (V_{REF+} not connected to V_{DDA})

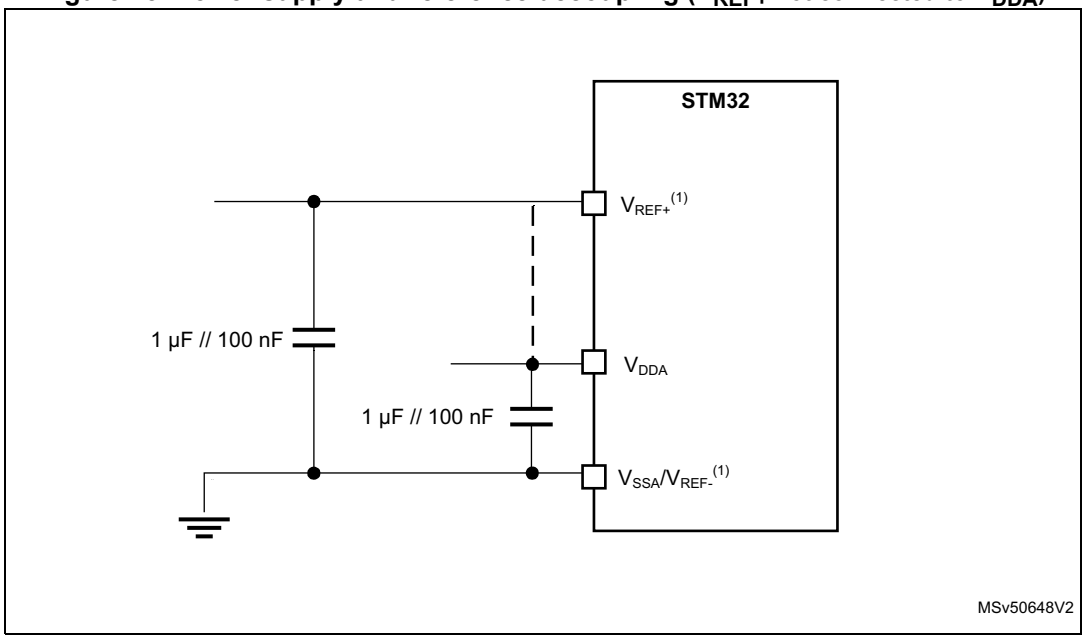

1. When V_{REF+} and V_{REF-} inputs are not available, they are internally connected to V_{DDA} and V_{SSA}, respectively.

Figure 46. Power supply and reference decoupling (V_{REF+} connected to V_{DDA})

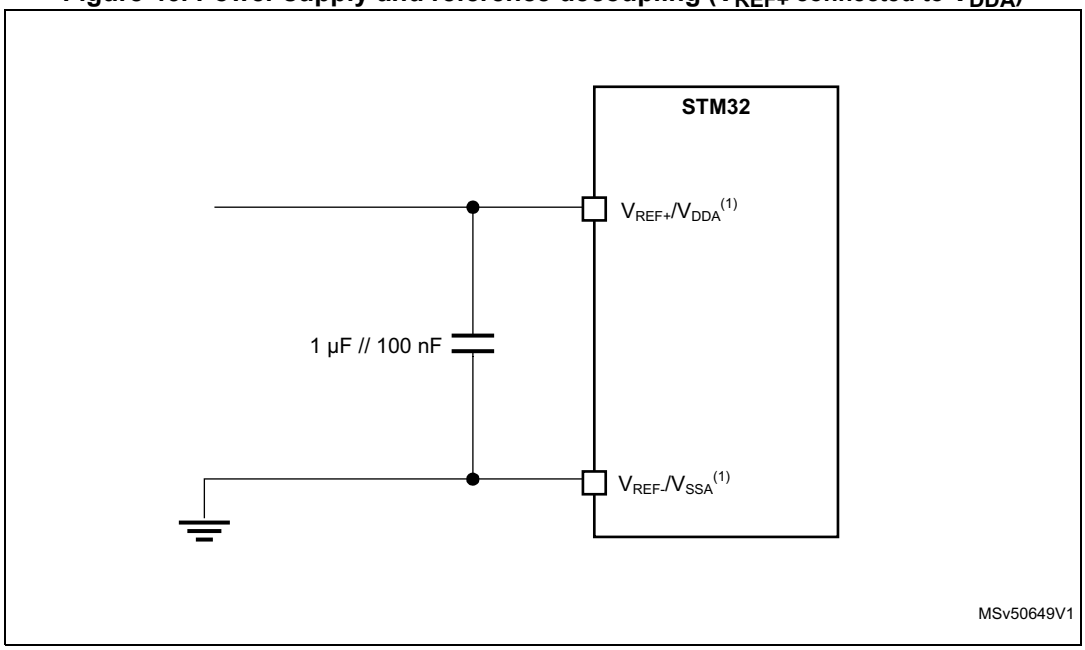

1. When V_{REF+} and V_{REF-} inputs are not available, they are internally connected to V_{DDA} and V_{SSA}, respectively.

6.3.23 12-bit ADC characteristics

Unless otherwise specified, the parameters given in *Table 86*, *Table 87* and *Table 88* are derived from tests performed under the ambient temperature and V_{DDA} supply voltage conditions summarized in *Table 12: General operating conditions*. In *Table 86*, *Table 87* and *Table 88*, f_{ADC} refers to $f_{adc_ker_ck}$.

Table 86. 12-bit ADC characteristics(1)(2)

Sym-bol	Parameter	Conditions						Min	Typ	Max	Unit
V_{DDA}	Analog power supply for ADC ON	-						1.62	-	3.6	V
V_{REF+} (3)	Positive reference voltage	$V_{DDA} \geq V_{REF+}$						1.62	-	V_{DDA}	V
V_{REF-}	Negative reference voltage	-						V_{SSA}	-	-	V
f_{ADC}	ADC clock frequency	1,62 V ≤ V_{DDA} ≤ 3.6 V						1.5	-	75	MHz
f_S(4)	Sampling rate for Direct channels	Resolution = 12 bits	Continuous and Discontinuous mode(5)	2.4 V ≤ V_{DDA} ≤ 3.6 V	–40 °C ≤ T_J ≤ 130 °C	f_{ADC} = 75 MHz	SMP = 2.5	-	-	5	MSPS
				1.6V ≤ V_{DDA} ≤ 3.6 V		f_{ADC} = 60 MHz		-	-	4	
			Single mode	2.4 V ≤ V_{DDA} ≤ 3.6 V		f_{ADC} = 50 MHz(6)		-	-	3.33	
				1.6 V ≤ V_{DDA} ≤ 3.6 V		f_{ADC} = 38 MHz(6)		-	-	2.53	
		Resolution = 10 bits	Continuous and Discontinuous mode(5)	1.6V ≤ V_{DDA} ≤ 3.6V	–40 °C ≤ T_J ≤ 130 °C	f_{ADC} = 75 MHz	SMP = 2.5	-	-	5.77	
			Single mode	2.4 V ≤ V_{DDA} ≤ 3.6 V		f_{ADC} = 58 MHz(6)		-	-	4.46	
				1.6V ≤ V_{DDA} ≤ 3.6V		f_{ADC} = 42 MHz(6)		-	-	3.23	
		Resolution = 8 bits	Continuous and Discontinuous mode(5)	1.6V ≤ V_{DDA} ≤ 3.6V	–40 °C ≤ T_J ≤ 130 °C	f_{ADC} = 75 MHz	SMP = 2.5	-	-	6.82	
			Single mode	2.4 V ≤ V_{DDA} ≤ 3.6 V		f_{ADC} = 67 MHz(6)		-	-	6.09	
				1.6V ≤ V_{DDA} ≤ 3.6V		f_{ADC} = 48 MHz(6)		-	-	4.36	
		Resolution = 6 bits	Continuous and Discontinuous mode(5)	1.6V ≤ V_{DDA} ≤ 3.6V	–40 °C ≤ T_J ≤ 130 °C	f_{ADC} = 75 MHz	SMP = 2.5	-	-	8.33	
			Single mode	2.4 V ≤ V_{DDA} ≤ 3.6 V		f_{ADC} = 75 MHz(6)		-	-	8.33	
				1.6V ≤ V_{DDA} ≤ 3.6V		f_{ADC} = 55 MHz(6)		-	-	6.11	

Table 86. 12-bit ADC characteristics(1)(2) (continued)

Symbol	Parameter	Conditions						Min	Typ	Max	Unit
f_S(4) (continued)	Sampling rate for fast channels (VIN[0:5])	Resolution = 12 bits	Continuous and Discontinuous mode(5)	2.4 V ≤ V_{DDA} ≤ 3.6 V	–40 °C ≤ T_J ≤ 130 °C	f_{ADC} = 65 MHz	SMP = 2.5	-	-	4.33	MSPS
				1.6V ≤ V_{DDA} ≤ 3.6V		f_{ADC} = 58 MHz		-	-	3.87	
			Single mode	2.4 V ≤ V_{DDA} ≤ 3.6 V		f_{ADC} = 32 MHz(6)		-	-	2.13	
				1.6V ≤ V_{DDA} ≤ 3.6V		f_{ADC} = 26 MHz(6)		-	-	1.73	
		Resolution = 10 bits	Continuous and Discontinuous mode(5)	1.6V ≤ V_{DDA} ≤ 3.6V		f_{ADC} = 75 MHz		-	-	5.77	
			Single mode	2.4 V ≤ V_{DDA} ≤ 3.6 V		f_{ADC} = 36 MHz(6)		-	-	2.77	
				1.6V ≤ V_{DDA} ≤ 3.6V		f_{ADC} = 30 MHz(6)		-	-	2.31	
		Resolution = 8 bits	Continuous and Discontinuous mode(5)	1.6V ≤ V_{DDA} ≤ 3.6V		f_{ADC} = 75 MHz		-	-	6.82	
			Single mode	2.4 V ≤ V_{DDA} ≤ 3.6 V		f_{ADC} =44 MHz(6)		-	-	4.00	
				1.6V ≤ V_{DDA} ≤ 3.6V		f_{ADC} = 35 MHz(6)		-	-	3.18	
		Resolution = 6 bits	Continuous and Discontinuous mode(5)	1.6V ≤ V_{DDA} ≤ 3.6V		f_{ADC} = 75 MHz		-	-	8.33	
			Single mode	2.4 V ≤ V_{DDA} ≤ 3.6 V		f_{ADC} = 56 MHz(6)		-	-	6.22	
				1.6V ≤ V_{DDA} ≤ 3.6V		f_{ADC} = 42 MHz(6)		-	-	4.66	
	Sampling rate for slow channels	Resolution = 12 bits	-	-	–40 °C ≤ T_J ≤ 130 °C	f_{ADC} = 15 MHz(6)	SMP = 2.5	-	-	1.00	
		Resolution = 10 bits						-	-	1.28	
		Resolution = 8 bits						-	-	1.63	
		Resolution = 6 bits						-	-	2.08	
t_{TRIG}	External trigger period	Resolution = 12 bits						-	-	15	$1/f_{ADC}$
V_{AIN}	Conversion voltage range	-						0	-	V_{REF+}	V
V_{CMIV}	Common mode input voltage	-						V_{REF} /2– 10%	V_{REF} /2	V_{REF}/2 + 10%	
R_{AIN} (7)	External input impedance	Resolution = 12 bits, T_J = 125 °C						-	-	220	Ω
		Resolution = 10 bits, T_J = 125 °C						-	-	2100	
		Resolution = 8 bits, T_J = 125 °C						-	-	12000	
		Resolution = 6 bits, T_J = 125 °C						-	-	80000	

Table 86. 12-bit ADC characteristics(1)(2) (continued)

Symbol	Parameter	Conditions	Min	Typ	Max	Unit
C_{ADC}	Internal sample and hold capacitor	-	-	5	-	pF
$t_{ADCVREG_STUP}$	ADC LDO startup time	-	-	5	10	µs
t_{STAB}	ADC power-up time	LDO already started	1	-	-	conversion cycle
t_{OFF_CAL}	Offset calibration time	-	135	-	-	$1/f_{ADC}$
t_{LATR}	Trigger conversion latency for regular and injected channels without aborting the conversion	CKMODE = 00	1.5	2	2.5	
		CKMODE = 01	-	-	2.5	
		CKMODE = 10	-	-	2.5	
		CKMODE = 11	-	-	2.25	
$t_{LATRINJ}$	Trigger conversion latency for regular and injected channels when a regular conversion is aborted	CKMODE = 00	2.5	3	3.5	
		CKMODE = 01	-	-	3.5	
		CKMODE = 10	-	-	3.5	
		CKMODE = 11	-	-	3.25	
t_S	Sampling time	-	2.5	-	640.5	
t_{CONV}	Total conversion time (including sampling time)	N-bits resolution	t_S + 0.5 + N	-	-	
$I_{DDA_D(ADC)}$	ADC consumption on V_{DDA} and V_{REF}, Differential mode	f_S= 5 MSPS	-	430	-	µA
		f_S = 1 MSPS	-	133	-	
		f_S = 0.1 MSPS	-	51	-	
$I_{DDA_SE(ADC)}$	ADC consumption on V_{DDA} and V_{REF}, Single-ended mode	f_S= 5 MSPS	-	350	-	
		f_S = 1 MSPS	-	122	-	
		f_S = 0.1 MSPS	-	47	-	
$I_{DD(ADC)}$	ADC consumption on V_{DD} per f_{ADC}	-	-	2.4	-	µA/MHz

1. Guaranteed by design.
2. The voltage booster on ADC switches must be used for V_{DDA} < 2.4 V (embedded I/O switches).
3. Depending on the package, VREF+ can be internally connected to V_{DDA} and VREF- to V_{SSA}.
4. Guaranteed by characterization for BGA and CSP packages. The values for LQFP packages may be different.
5. The conversion of the first element in the group is excluded.

6. f_{ADC} value corresponds to the maximum frequency that can be reached considering a 2.5 sampling period. For other SMPy sampling periods, the maximum frequency is f_{ADC} value * SMPy / 2.5 with a limitation to 75 MHz.
7. The tolerance is 2 LSBs for 12-bit, 10-bit and 8-bit resolutions. It is otherwise specified.

Table 87. Minimum sampling time vs R_{AIN} (12-bit ADC)(1)(2)

Resolution	R_{AIN} (Ω)	Minimum sampling time (s)		
		Direct channels(3)	Fast channels(4)	Slow channels(5)
12 bits	47	5.55E-08	7.04E-08	1.03E-07
	68	5.76E-08	7.22E-08	1.05E-07
	100	6.17E-08	7.65E-08	1.07E-07
	150	7.02E-08	8.45E-08	1.13E-07
	220	8.59E-08	1.00E-07	1.22E-07
	330	1.11E-07	1.26E-07	1.41E-07
	470	1.46E-07	1.61E-07	1.69E-07
	680	1.98E-07	2.17E-07	2.25E-07
10 bits	47	4.90E-08	6.06E-08	8.77E-08
	68	5.07E-08	6.27E-08	8.95E-08
	100	5.41E-08	6.67E-08	9.22E-08
	150	6.18E-08	7.50E-08	9.59E-08
	220	7.51E-08	8.70E-08	1.04E-07
	330	9.46E-08	1.07E-07	1.17E-07
	470	1.22E-07	1.34E-07	1.42E-07
	680	1.63E-07	1.77E-07	1.86E-07
	1000	2.27E-07	2.42E-07	2.43E-07
	1500	3.27E-07	3.40E-07	3.35E-07
	2200	4.53E-07	4.86E-07	4.73E-07
	3300	6.56E-07	6.93E-07	6.72E-07

Table 87. Minimum sampling time vs R_{AIN} (12-bit ADC)(1)(2) (continued)

Resolution	R_{AIN} (Ω)	Minimum sampling time (s)		
		Direct channels(3)	Fast channels(4)	Slow channels(5)
8 bits	47	4.35E-08	5.31E-08	7.36E-08
	68	4.47E-08	5.48E-08	7.47E-08
	100	4.72E-08	5.79E-08	7.63E-08
	150	5.33E-08	6.35E-08	7.88E-08
	220	6.26E-08	7.26E-08	8.47E-08
	330	7.84E-08	8.80E-08	9.48E-08
	470	9.80E-08	1.07E-07	1.14E-07
	680	1.28E-07	1.39E-07	1.43E-07
	1000	1.76E-07	1.88E-07	1.90E-07
	1500	2.49E-07	2.66E-07	2.64E-07
	2200	3.50E-07	3.63E-07	3.63E-07
	3300	5.09E-07	5.27E-07	5.24E-07
	4700	7.00E-07	7.28E-07	7.09E-07
	6800	9.84E-07	1.03E-06	1.00E-06
	10000	1.43E-06	1.48E-06	1.44E-06
	15000	2.10E-06	2.18E-06	2.11E-06
6 bits	47	3.79E-08	4.58E-08	5.74E-08
	68	3.88E-08	4.69E-08	5.81E-08
	100	4.09E-08	4.89E-08	5.93E-08
	150	4.48E-08	5.25E-08	6.14E-08
	220	5.07E-08	5.81E-08	6.58E-08
	330	6.04E-08	6.79E-08	7.46E-08
	470	7.37E-08	8.10E-08	8.60E-08
	680	9.31E-08	1.01E-07	1.04E-07
	1000	1.23E-07	1.32E-07	1.34E-07
	1500	1.71E-07	1.82E-07	1.82E-07
	2200	2.39E-07	2.50E-07	2.49E-07
	3300	3.43E-07	3.57E-07	3.49E-07
	4700	4.72E-07	4.92E-07	4.81E-07
	6800	6.65E-07	6.89E-07	6.68E-07
	10000	9.54E-07	9.88E-07	9.54E-07
	15000	1.40E-06	1.45E-06	1.39E-06

1. Guaranteed by design.
2. Data valid up to 130 °C, with a 22 pF PCB capacitor and V_{DDA} = 1.62 V.

3. Direct channels are connected to analog I/Os (PA0_C, PA1_C, PC2_C and PC3_C) to optimize ADC performance.
4. Fast channels correspond to ADCx_INx[0:5].
5. Slow channels correspond to all ADC inputs except for the Direct and Fast channels.

Table 88. 12-bit ADC accuracy(1)(2)

Symbol	Parameter	Conditions		Min	Typ	Max	Unit
ET	Total unadjusted error	Direct channel	Single ended	-	3.5	5	±LSB
			Differential	-	2.5	3	
		Fast channel	Single ended	-	3.5	5	
			Differential	-	2.5	3	
		Slow channel	Single ended	-	3.5	5	
			Differential	-	2.5	3	
EO	Offset error	-		-	+/-2	+/-5	
EG	Gain error	-		-	TBD (3)	-	
ED	Differential linearity error	Single ended		-	+/- 0.75	+1.5/-1	
		Differential		-	+/-0.5	+1.25 /-1	
EL	Integral linearity error	Direct channel	Single ended	-	+/-1	+/-2.5	
			Differential	-	+/-1	+/-2	
		Fast channel	Single ended	-	+/-1	+/-2.5	
			Differential	-	+/-1	+/-2	
		Slow channel	Single ended	-	+/-1	+/-2.5	
			Differential	-	+/-1	+/-2	
ENOB	Effective number of bits	Single ended		-	11.2	-	bits
		Differential		-	11.5	-	
SINAD	Signal-to-noise and distortion ratio	Single ended		-	68.9	-	dB
		Differential		-	71.1	-	
SNR	Signal-to-noise ratio	Single ended		-	69.1	-	
		Differential		-	71.4	-	
THD	Total harmonic distortion	Single ended		-	-79.6	-	
		Differential		-	-81.8	-	

1. Guaranteed by characterization for BGA packages. The maximum values are preliminary data. The values for LQFP packages may be different.
2. ADC DC accuracy values are measured after internal calibration in Continuous and Discontinuous mode.
3. TBD stands for “to be defined”.

6.3.24 DAC characteristics

Table 89. DAC characteristics(1)

Symbol	Parameter	Conditions		Min	Typ	Max	Unit
V_{DDA}	Analog supply voltage	-		1.8	3.3	3.6	V
V_{REF+}	Positive reference voltage	-		1.80	-	V_{DDA}	
V_{REF-}	Negative reference voltage	-		-	V_{SSA}	-	
R_L	Resistive Load	DAC output buffer ON	connected to V_{SSA}	5	-	-	kΩ
			connected to V_{DDA}	25	-	-	
R_O	Output Impedance	DAC output buffer OFF		10.3	13	16	
R_{BON}	Output impedance sample and hold mode, output buffer ON	DAC output buffer ON	V_{DD} = 2.7 V	-	-	1.6	kΩ
			V_{DD} = 2.0 V	-	-	2.6	
R_{BOFF}	Output impedance sample and hold mode, output buffer OFF	DAC output buffer OFF	V_{DD} = 2.7 V	-	-	17.8	kΩ
			V_{DD} = 2.0 V	-	-	18.7	
C_L	Capacitive Load	DAC output buffer OFF		-	-	50	pF
C_{SH}		Sample and Hold mode		-	0.1	1	µF
V_{DAC_OUT}	Voltage on DAC_OUT output	DAC output buffer ON		0.2	-	V_{REF+} − 0.2	V
		DAC output buffer OFF		0	-	V_{REF+}	
$t_{SETTLING}$	Settling time (full scale: for a 12-bit code transition between the lowest and the highest input codes when DAC_OUT reaches the final value of ±0.5LSB, ±1LSB, ±2LSB, ±4LSB, ±8LSB)	Normal mode, DAC output buffer ON, $C_L \leq 50$ pF, $R_L \geq 5$ kΩ	±0.5 LSB	-	2.05	3	µs
			±1 LSB	-	1.97	2.87	
			±2 LSB	-	1.67	2.84	
			±4 LSB	-	1.66	2.78	
			±8 LSB	-	1.65	2.7	
		Normal mode, DAC output buffer OFF, ±1LSB C_L=10 pF		-	1.7	2	
t_{WAKEUP}(2)	Wakeup time from off state (setting the ENx bit in the DAC Control register) until the final value of ±1LSB is reached	Normal mode, DAC output buffer ON, $C_L \leq 50$ pF, R_L = 5 kΩ		-	5	7.5	µs
		Normal mode, DAC output buffer OFF, $C_L \leq 10$ pF			2	5	
PSRR	DC V_{DDA} supply rejection ratio	Normal mode, DAC output buffer ON, $C_L \leq 50$ pF, R_L = 5 kΩ		-	−80	−28	dB

Table 89. DAC characteristics(1) (continued)

Symbol	Parameter	Conditions		Min	Typ	Max	Unit
t_{SAMP}	Sampling time in Sample and Hold mode C_L=100 nF (code transition between the lowest input code and the highest input code when DAC_OUT reaches the ±1LSB final value)	MODE<2:0>_V12=100/101 (BUFFER ON)		-	0.7	2.6	ms
		MODE<2:0>_V12=110 (BUFFER OFF)		-	11.5	18.7	
		MODE<2:0>_V12=111 (INTERNAL BUFFER OFF)		-	0.3	0.6	µs
I_{leak}	Output leakage current	-			(3)		nA
C_{lint}	Internal sample and hold capacitor	-		1.8	2.2	2.6	pF
t_{TRIM}	Middle code offset trim time	Minimum time to verify the each code		50	-	-	µs
V_{offset}	Middle code offset for 1 trim code step	V_{REF+} = 3.6 V		-	850	-	µV
		V_{REF+} = 1.8 V		-	425	-	
$I_{DDA(DAC)}$	DAC quiescent consumption from V_{DDA}	DAC output buffer ON	No load, middle code (0x800)	-	360	-	µA
			No load, worst code (0xF1C)	-	490	-	
		DAC output buffer OFF	No load, middle/ worst code (0x800)	-	20	-	
		Sample and Hold mode, C_{SH}=100 nF		-	$360*T_{ON}/(T_{ON}+T_{OFF})$ (4)	-	
I_{DDV}(DAC)	DAC consumption from V_{REF+}	DAC output buffer ON	No load, middle code (0x800)	-	170	-	
			No load, worst code (0xF1C)	-	170	-	
		DAC output buffer OFF	No load, middle/ worst code (0x800)	-	160	-	
		Sample and Hold mode, Buffer ON, C_{SH}=100 nF (worst code)		-	$170*T_{ON}/(T_{ON}+T_{OFF})$ (4)	-	
		Sample and Hold mode, Buffer OFF, C_{SH}=100 nF (worst code)		-	$160*T_{ON}/(T_{ON}+T_{OFF})$ (4)	-	

1. Guaranteed by design unless otherwise specified.

2. In buffered mode, the output can overshoot above the final value for low input code (starting from the minimum value).
3. Refer to *Table 54: I/O static characteristics*.
4. T_{ON} is the refresh phase duration, while T_{OFF} is the hold phase duration. Refer to the product reference manual for more details.

Table 90. DAC accuracy(1)

Symbol	Parameter	Conditions		Min	Typ	Max	Unit
DNL	Differential non linearity(2)	DAC output buffer ON		−2	-	2	LSB
		DAC output buffer OFF		−2	-	2	
-	Monotonicity	10 bits		-	-	-	-
INL	Integral non linearity(3)	DAC output buffer ON, $C_L \le 50$ pF, $R_L \ge 5$ kΩ		−4	-	4	LSB
		DAC output buffer OFF, $C_L \le 50$ pF, no R_L		−4	-	4	
Offset	Offset error at code 0x800 (3)	DAC output buffer ON, $C_L \le 50$ pF, $R_L \ge 5$ kΩ	V_{REF+} = 3.6 V	-	-	±12	LSB
			V_{REF+} = 1.8 V	-	-	±25	
		DAC output buffer OFF, $C_L \le 50$ pF, no R_L		-	-	±8	
Offset1	Offset error at code 0x001(4)	DAC output buffer OFF, $C_L \le 50$ pF, no R_L		-	-	±5	LSB
OffsetCal	Offset error at code 0x800 after factory calibration	DAC output buffer ON, $C_L \le 50$ pF, $R_L \ge 5$ kΩ	V_{REF+} = 3.6 V	-	-	±5	LSB
			V_{REF+} = 1.8 V	-	-	±7	
Gain	Gain error(5)	DAC output buffer ON,$C_L \le 50$ pF, $R_L \ge 5$ kΩ		-	-	±1	%
		DAC output buffer OFF, $C_L \le 50$ pF, no R_L		-	-	±1	
TUE	Total unadjusted error	DAC output buffer ON, $C_L \le 50$ pF, $R_L \ge 5$ kΩ		-	-	±30	LSB
		DAC output buffer OFF, $C_L \le 50$ pF, no R_L				±12	
TUECal	Total unadjusted error after calibration	DAC output buffer ON, $C_L \le 50$ pF, $R_L \ge 5$ kΩ		-	-	±23	
SNR	Signal-to-noise ratio(6)	DAC output buffer ON,$C_L \le 50$ pF, $R_L \ge 5$ kΩ , 1 kHz, BW = 500 KHz		-	67.8	-	dB
		DAC output buffer OFF, $C_L \le 50$ pF, no R_L,1 kHz, BW = 500 KHz		-	67.8	-	

Table 90. DAC accuracy(1) (continued)

Symbol	Parameter	Conditions	Min	Typ	Max	Unit
THD	Total harmonic distortion(6)	DAC output buffer ON, $C_L \le 50$ pF, $R_L \ge 5$ kΩ , 1 kHz	-	−78.6	-	dB
		DAC output buffer OFF, $C_L \le 50$ pF, no R_L, 1 kHz	-	−78.6	-	
SINAD	Signal-to-noise and distortion ratio(6)	DAC output buffer ON, $C_L \le 50$ pF, $R_L \ge 5$ kΩ , 1 kHz	-	67.5	-	dB
		DAC output buffer OFF, $C_L \le 50$ pF, no R_L, 1 kHz	-	67.5	-	
ENOB	Effective number of bits	DAC output buffer ON, $C_L \le 50$ pF, $R_L \ge 5$ kΩ , 1 kHz	-	10.9	-	bits
		DAC output buffer OFF, $C_L \le 50$ pF, no R_L, 1 kHz	-	10.9	-	

1. Guaranteed by characterization results.
2. Difference between two consecutive codes minus 1 LSB.
3. Difference between the value measured at Code i and the value measured at Code i on a line drawn between Code 0 and last Code 4095.
4. Difference between the value measured at Code (0x001) and the ideal value.
5. Difference between the ideal slope of the transfer function and the measured slope computed from code 0x000 and 0xFFF when the buffer is OFF, and from code giving 0.2 V and (V_{REF+} - 0.2 V) when the buffer is ON.
6. Signal is −0.5dBFS with $F_{sampling}$=1 MHz.

Figure 47. 12-bit buffered /non-buffered DAC

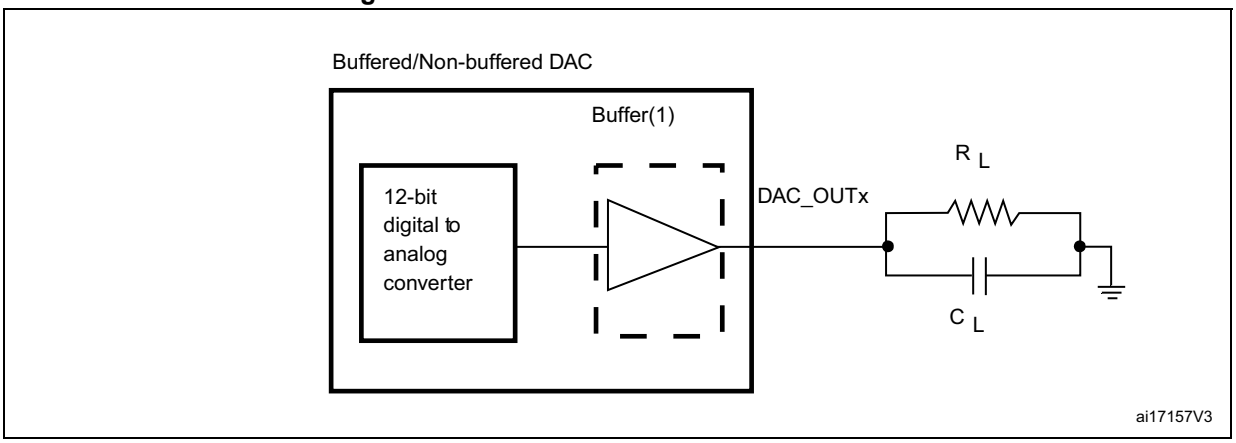

1. The DAC integrates an output buffer that can be used to reduce the output impedance and to drive external loads directly without the use of an external operational amplifier. The buffer can be bypassed by configuring the BOFFx bit in the DAC_CR register.

6.3.25 Voltage reference buffer characteristics

Table 91. VREFBUF characteristics(1)

Symbol	Parameter	Conditions		Min	Typ	Max	Unit
V_{DDA}	Analog supply voltage	Normal mode, V_{DDA} = 3.3 V	VSCALE = 000	2.8	3.3	3.6	V
			VSCALE = 001	2.4	-	3.6	
			VSCALE = 010	2.1	-	3.6	
			VSCALE = 011	1.8	-	3.6	
		Degraded mode(2)	VSCALE = 000	1.62	-	2.80	
			VSCALE = 001	1.62	-	2.40	
			VSCALE = 010	1.62	-	2.10	
			VSCALE = 011	1.62	-	1.80	
V_{REFBUF_OUT}	Voltage Reference Buffer Output, at 30 °C, I_{load}= 100 µA	Normal mode at 30 °C, I_{load} = 100 µA	VSCALE = 000	2.4980	2.5000	2.5035	
			VSCALE = 001	2.0460	2.0490	2.0520	
			VSCALE = 010	1.8010	1.8040	1.8060	
			VSCALE = 011	1.4995	1.5015	1.5040	
		Degraded mode(2)	VSCALE = 000	V_{DDA}– 150 mV	-	V_{DDA}	
			VSCALE = 001	V_{DDA}– 150 mV	-	V_{DDA}	
			VSCALE = 010	V_{DDA}– 150 mV	-	V_{DDA}	
			VSCALE = 011	V_{DDA}– 150 mV	-	V_{DDA}	
TRIM	Trim step resolution	-	-	-	±0.05	±0.1	%
C_L	Load capacitor	-	-	0.5	1	1.50	µF
esr	Equivalent Serial Resistor of C_L	-	-	-	-	2	Ω
I_{LOAD}	Static load current	-	-	-	-	4	mA
I_{line_reg}	Line regulation	2.8 V ≤ V_{DDA} ≤ 3.6 V	I_{load} = 500 µA	-	200	-	ppm/V
			I_{load} = 4 mA	-	100	-	
I_{load_reg}	Load regulation	500 µA ≤ I_{LOAD} ≤ 4 mA	Normal mode	-	50	-	ppm/ mA
T_{coeff}	Temperature coefficient	−40 °C < T_J < +130 °C		-	-	T_{coeff} V_{REFINT} + 100	ppm/ °C
PSRR	Power supply rejection	DC	-	-	60	-	dB
		100KHz	-	-	40	-	

Table 91. VREFBUF characteristics(1) (continued)

Symbol	Parameter	Conditions		Min	Typ	Max	Unit
t_{START}	Start-up time	C_L=0.5 µF	-	-	300	-	µs
		C_L=1 µF	-	-	500	-	
		C_L=1.5 µF	-	-	650	-	
I_{INRUSH}	Control of maximum DC current drive on V_{REFBUF_OUT} during startup phase(3)	-		-	8	-	mA
I_{DDA} (VREFBUF)	VREFBUF consumption from V_{DDA}	I_{LOAD} = 0 µA	-	-	15	25	µA
		I_{LOAD} = 500 µA	-	-	16	30	
		I_{LOAD} = 4 mA	-	-	32	50	

1. Guaranteed by design, unless otherwise specified.
2. In degraded mode, the voltage reference buffer cannot accurately maintain the output voltage (V_{DDA}−drop voltage).
3. To properly control VREFBUF I_{INRUSH} current during the startup phase and the change of scaling, V_{DDA} voltage should be in the range of 1.8 V-3.6 V, 2.1 V-3.6 V, 2.4 V-3.6 V and 2.8 V-3.6 V for VSCALE = 011, 010, 001 and 000, respectively.

6.3.26 Analog temperature sensor characteristics

Table 92. Temperature sensor characteristics

Symbol	Parameter	Min	Typ	Max	Unit
T_L(1)	V_{SENSE} linearity with temperature	-	-	±3	°C
Avg_Slope(2)	Average slope	-	2	-	mV/°C
V_{30}(3)	Voltage at 30°C ± 5 °C	-	0.62	-	V
t_{start_run}	Startup time in Run mode (buffer startup)	-	-	25.2	µs
t_{S_temp}(1)	ADC sampling time when reading the temperature	9	-	-	
I_{sens}(1)	Sensor consumption	-	0.18	0.31	µA
$I_{sensbuf}$(1)	Sensor buffer consumption	-	3.8	6.5	

1. Guaranteed by design.
2. Guaranteed by characterization results.
3. Measured at V_{DDA} = 3.3 V ± 10 mV. The V_{30} ADC conversion result is stored in the TS_CAL1 byte.

Table 93. Temperature sensor calibration values

Symbol	Parameter	Memory address
TS_CAL1	Temperature sensor raw data acquired value at 30 °C, V_{DDA}=3.3 V	0x1FF1 E820 -0x1FF1 E821
TS_CAL2	Temperature sensor raw data acquired value at 130 °C, V_{DDA}=3.3 V	0x1FF1 E840 - 0x1FF1 E841

6.3.27 Digital temperature sensor characteristics

Table 94. Digital temperature sensor characteristics(1)

Symbol	Parameter	Conditions	Min	Typ	Max	Unit
f_{DTS}(2)	Output Clock frequency	-	500	750	1150	kHz
T_{LC}(2)	Temperature linearity coefficient	VOS2	1660	2100	2750	Hz/°C
T_{TOTAL_ERROR}(2)	Temperature offset measurement, all VOS	T_J = −40°C to 30°C	−13	-	4	°C
		T_J = 30°C to Tjmax	−7	-	2	
T_{VDD_CORE}	Additional error due to supply variation	VOS2	0	-	0	°C
		VOS0, VOS1, VOS3	−1	-	1	
t_{TRIM}	Calibration time	-	-	-	2	ms
t_{WAKE_UP}	Wake-up time from off state until DTS ready bit is set	-	-	67	116.00	µs
I_{DDCORE_DTS}	DTS consumption on VDD_CORE	-	8.5	30	70.0	µA

1. Guaranteed by design, unless otherwise specified.
2. Guaranteed by characterization results.

6.3.28 Temperature and V_{BAT} monitoring

Table 95. V_{BAT} monitoring characteristics

Symbol	Parameter	Min	Typ	Max	Unit
R	Resistor bridge for V_{BAT}	-	26	-	KΩ
Q	Ratio on V_{BAT} measurement	-	4	-	-
Er(1)	Error on Q	–10	-	+10	%
t_{S_vbat}(1)	ADC sampling time when reading V_{BAT} input	9	-	-	µs
$V_{BAThigh}$	High supply monitoring	-	3.55	-	V
V_{BATlow}	Low supply monitoring	-	1.36	-	

1. Guaranteed by design.

Table 96. V_{BAT} charging characteristics

Symbol	Parameter	Condition	Min	Typ	Max	Unit
R_{BC}	Battery charging resistor	VBRS in PWR_CR3= 0	-	5	-	KΩ
		VBRS in PWR_CR3= 1		1.5	-	

Table 97. Temperature monitoring characteristics

Symbol	Parameter	Min	Typ	Max	Unit
$TEMP_{high}$	High temperature monitoring	-	117	-	°C
$TEMP_{low}$	Low temperature monitoring	-	–25	-	

6.3.29 Voltage booster for analog switch

Table 98. Voltage booster for analog switch characteristics(1)

Symbol	Parameter	Condition	Min	Typ	Max	Unit
V_{DD}	Supply voltage	-	1.62	2.6	3.6	V
$t_{SU(BOOST)}$	Booster startup time	-	-	-	50	µs
$I_{DD(BOOST)}$	Booster consumption	1.62 V ≤ V_{DD} ≤ 2.7 V	-	-	125	µA
		2.7 V < V_{DD} < 3.6 V	-	-	250	

1. Guaranteed by characterization results.

6.3.30 Comparator characteristics

Table 99. COMP characteristics(1)

Symbol	Parameter	Conditions	Min	Typ	Max	Unit
V_{DDA}	Analog supply voltage	-	1.62	3.3	3.6	V
V_{IN}	Comparator input voltage range	-	0	-	V_{DDA}	
V_{BG}	Scaler input voltage	-	(2)			
V_{SC}	Scaler offset voltage	-	-	±5	±10	mV
$I_{DDA(SCALER)}$	Scaler static consumption from V_{DDA}	BRG_EN=0 (bridge disable)	-	0.2	0.3	µA
		BRG_EN=1 (bridge enable)	-	0.8	1	
t_{START_SCALER}	Scaler startup time	-	-	140	250	µs
t_{START}	Comparator startup time to reach propagation delay specification	High-speed mode	-	2	5	µs
		Medium mode	-	5	20	
		Ultra-low-power mode	-	15	80	
t_D(3)	Propagation delay for 200 mV step with 100 mV overdrive	High-speed mode	-	50	80	ns
		Medium mode	-	0.5	0.9	µs
		Ultra-low-power mode	-	2.5	7	
	Propagation delay for step > 200 mV with 100 mV overdrive only on positive inputs	High-speed mode	-	50	120	ns
		Medium mode	-	0.5	1.2	µs
		Ultra-low-power mode	-	2.5	7	
V_{offset}	Comparator offset error	Full common mode range	-	±5	±20	mV

Table 99. COMP characteristics(1) (continued)

Symbol	Parameter	Conditions		Min	Typ	Max	Unit
V_{hys}	Comparator hysteresis	No hysteresis		-	0	-	mV
		Low hysteresis		4	10	22	
		Medium hysteresis		8	20	37	
		High hysteresis		16	30	52	
I_{DDA}(COMP)	Comparator consumption from V_{DDA}	Ultra-low-power mode	Static	-	400	600	nA
			With 50 kHz ±100 mV overdrive square signal	-	800	-	
		Medium mode	Static	-	5	7	µA
			With 50 kHz ±100 mV overdrive square signal	-	6	-	
		High-speed mode	Static	-	70	100	
			With 50 kHz ±100 mV overdrive square signal	-	75	-	

1. Guaranteed by design, unless otherwise specified.
2. Refer to *Table 20: Embedded reference voltage*.
3. Guaranteed by characterization results.

6.3.31 Operational amplifier characteristics

Table 100. Operational amplifier characteristics(1)

Symbol	Parameter	Conditions	Min	Typ	Max	Unit
V_{DDA}	Analog supply voltage Range	-	2	3.3	3.6	V
CMIR	Common Mode Input Range	-	0	-	V_{DDA}	
VI_{OFFSET}	Input offset voltage	25°C, no load on output	-	-	±1.5	mV
		All voltages and temperature, no load	-	-	±2.5	
ΔVI_{OFFSET}	Input offset voltage drift	-	-	±3.0	-	µV/°C
TRIMOFFSETP TRIMLPOFFSETP	Offset trim step at low common input voltage ($0.1*V_{DDA}$)	-	-	1.1	1.5	mV
TRIMOFFSETN TRIMLPOFFSETN	Offset trim step at high common input voltage ($0.9*V_{DDA}$)	-	-	1.1	1.5	
I_{LOAD}	Drive current	-	-	-	500	µA
I_{LOAD_PGA}	Drive current in PGA mode	-	-	-	270	

Table 100. Operational amplifier characteristics(1) (continued)

Symbol	Parameter	Conditions		Min	Typ	Max	Unit
C_{LOAD}	Capacitive load	-		-	-	50	pF
CMRR	Common mode rejection ratio	-		-	80	-	dB
PSRR	Power supply rejection ratio	C_{LOAD} ≤ 50pf / R_{LOAD} ≥ 4 kΩ(2) at 1 kHz, $V_{com}=V_{DDA}/2$		50	66	-	dB
GBW	Gain bandwidth for high supply range	200 mV ≤ Output dynamic range ≤ V_{DDA} - 200 mV		4	7.3	12.3	MHz
SR	Slew rate (from 10% and 90% of output voltage)	Normal mode		-	3	-	V/µs
		High-speed mode		-	24	-	
AO	Open loop gain	200 mV ≤ Output dynamic range ≤ V_{DDA} - 200 mV		59	90	129	dB
φm	Phase margin	-		-	55	-	°
GM	Gain margin	-		-	12	-	dB
V_{OHSAT}	High saturation voltage	I_{load}=max or R_{LOAD}=min, Input at V_{DDA}		V_{DDA} −100 mV	-	-	mV
V_{OLSAT}	Low saturation voltage	I_{load}=max or R_{LOAD}=min, Input at 0 V		-	-	100	
t_{WAKEUP}	Wake up time from OFF state	Normal mode	C_{LOAD} ≤ 50pf, R_{LOAD} ≥ 4 kΩ, follower configuration	-	0.8	3.2	µs
		High speed mode	C_{LOAD} ≤ 50pf, R_{LOAD} ≥ 4 kΩ, follower configuration	-	0.9	2.8	
PGA gain	Non inverting gain error value	PGA gain = 2		−1	-	1	%
		PGA gain = 4		−2	-	2	
		PGA gain = 8		−2.5	-	2.5	
		PGA gain = 16		−3	-	3	
	Inverting gain error value	PGA gain = 2		−1	-	1	
		PGA gain = 4		−1	-	1	
		PGA gain = 8		−2	-	2	
		PGA gain = 16		−3	-	3	
	External non-inverting gain error value	PGA gain = 2		−1	-	1	
		PGA gain = 4		−3	-	3	
		PGA gain = 8		−3.5	-	3.5	
		PGA gain = 16		−4	-	4	

Table 100. Operational amplifier characteristics(1) (continued)

Symbol	Parameter	Conditions		Min	Typ	Max	Unit
$R_{network}$	R2/R1 internal resistance values in non-inverting PGA mode(3)	PGA Gain=2		-	10/10	-	kΩ/ kΩ
		PGA Gain=4		-	30/10	-	
		PGA Gain=8		-	70/10	-	
		PGA Gain=16		-	150/10	-	
	R2/R1 internal resistance values in inverting PGA mode(3)	PGA Gain = -1		-	10/10	-	
		PGA Gain = -3		-	30/10	-	
		PGA Gain = -7		-	70/10	-	
		PGA Gain = -15		-	150/10	-	
Delta R	Resistance variation (R1 or R2)	-		−15	-	15	%
PGA BW	PGA bandwidth for different non inverting gain	Gain=2		-	GBW/2	-	MHz
		Gain=4		-	GBW/4	-	
		Gain=8		-	GBW/8	-	
		Gain=16		-	GBW/16	-	
	PGA bandwidth for different inverting gain	Gain = -1		-	5.00	-	MHz
		Gain = -3		-	3.00	-	
		Gain = -7		-	1.50	-	
		Gain = -15		-	0.80	-	
en	Voltage noise density	at 1 KHz	output loaded with 4 kΩ	-	140	-	nV/√ Hz
		at 10 KHz		-	55	-	
$I_{DDA(OPAMP)}$	OPAMP consumption from V_{DDA}	Normal mode	no Load, quiescent mode, follower	-	570	1000	µA
		High-speed mode		-	610	1200	

1. Guaranteed by design, unless otherwise specified.
2. R_{LOAD} is the resistive load connected to V_{SSA} or to V_{DDA}.
3. R2 is the internal resistance between the OPAMP output and th OPAMP inverting input. R1 is the internal resistance between the OPAMP inverting input and ground. PGA gain = 1 + R2/R1.

6.3.32 Digital filter for Sigma-Delta Modulators (DFSDM) characteristics

Unless otherwise specified, the parameters given in *Table 101* for DFSDM are derived from tests performed under the ambient temperature, fPCLKx frequency and supply voltage conditions summarized in *Table 12: General operating conditions*.

- Output speed is set to OSPEEDRy[1:0] = 10
- Capacitive load C_L = 30 pF
- Measurement points are done at CMOS levels: $0.5V_{DD}$
- VOS level set to VOS0

Refer to *Section 6.3.17: I/O port characteristics* for more details on the input/output alternate function characteristics (DiFSDM_CKINx, DFSDM_DATINx, DFSDM_CKOUT for DFSDM).

Table 101. DFSDM measured timing

Symbol	Parameter	Conditions		Min	Typ	Max	Unit
$f_{DFSDMCLK}$	DFSDM clock	1.62 < V_{DD} < 3.6 V		-	-	(1)	MHz
f_{CKIN} ($1/T_{CKIN}$)	Input clock frequency	SPI mode (SITP[1:0] = 0,1), External clock mode (SPICKSEL[1:0] = 0)		-	-	20	
		SPI mode (SITP[1:0] = 0,1), Internal clock mode (SPICKSEL[1:0] # 0)		-	-	20	
f_{CKOUT}	Output clock frequency	1.62 < V_{DD} < 3.6 V		-	-	20	
$DuCy_{CKOUT}$	Output clock frequency duty cycle	1.62 < V_{DD} < 3.6 V	Even division, CKOUTDIV = n, 1, 3, 5..	45	50	55	%
			Odd division, CKOUTDIV = n, 2, 4, 6..	(((n/2+1)/(n+1)) *100)−5	(((n/2+1)/(n+1)) *100)	(((n/2+1)/(n+1)) *100)+5	

Table 101. DFSDM measured timing (continued)

Symbol	Parameter	Conditions	Min	Typ	Max	Unit
$t_{wh(CKIN)}$ $t_{wl(CKIN)}$	Input clock high and low time	SPI mode (SITP[1:0] = 0,1), External clock mode (SPICKSEL[1:0] = 0)	$T_{CKIN}/2-0.5$	$T_{CKIN}/2$	-	ns
t_{su}	Data input setup time	SPI mode (SITP[1:0] = 0,1), External clock mode (SPICKSEL[1:0] = 0)	2	-	-	
t_h	Data input hold time	SPI mode (SITP[1:0] = 0,1), External clock mode (SPICKSEL[1:0] = 0)	1	-	-	
$T_{Manchester}$	Manchester data period (recovered clock period)	Manchester mode (SITP[1:0] = 2,3), Internal clock mode (SPICKSEL[1:0] # 0)	(CKOUTDIV+1) * $T_{DFSDMCLK}$	-	(2*CKOUTDIV) * $T_{DFSDMCLK}$	

1. The maximum DFSDM kernel clock frequency is specified in the RCC chapter of the reference manual (RM0468).

Figure 48. Channel transceiver timing diagrams

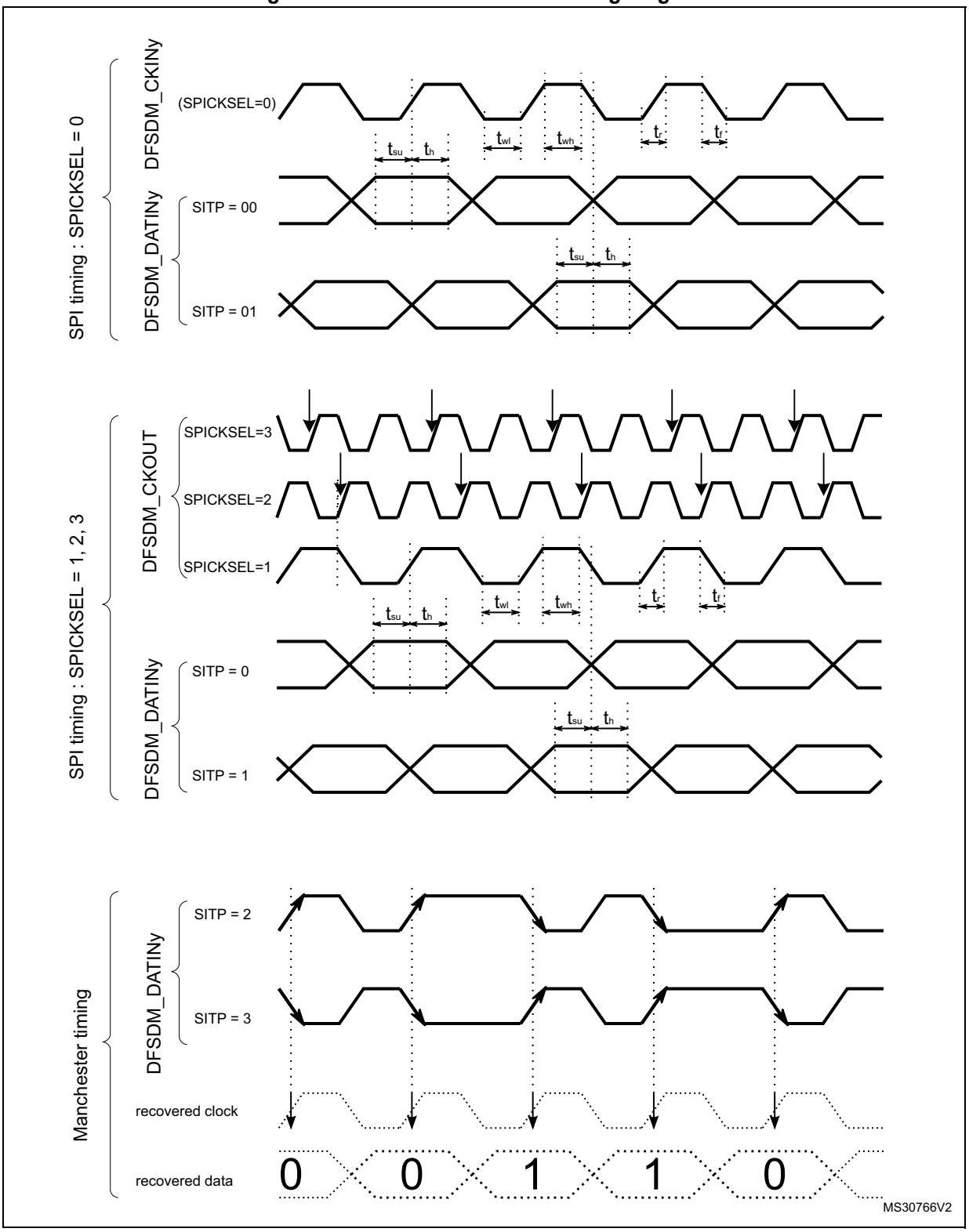

6.3.33 Camera interface (DCMI) timing specifications

Unless otherwise specified, the parameters given in *Table 102* for DCMI are derived from tests performed under the ambient temperature, f_{HCLK} frequency and VDD supply voltage summarized in *Table 12: General operating conditions*, with the following configuration:

- DCMI_PIXCLK polarity: falling
- DCMI_VSYNC and DCMI_HSYNC polarity: high
- Data formats: 14 bits
- Capacitive load C_L=30 pF
- Measurement points are done at CMOS levels: $0.5V_{DD}$
- VOS level set to VOS0

Table 102. DCMI characteristics(1)

Symbol	Parameter	Min	Max	Unit
-	Frequency ratio DCMI_PIXCLK/f_{HCLK}	-	0.4	-
DCMI_PIXCLK	Pixel Clock input	-	110	MHz
D_{pixel}	Pixel Clock input duty cycle	30	70	%
$t_{su(}$DATA)	Data input setup time	2	-	ns
t_h(DATA)	Data hold time	1	-	
tsu(HSYNC), tsu(VSYNC)	DCMI_HSYNC/ DCMI_VSYNC input setup time	2	-	
th(HSYNC), th(VSYNC)	DCMI_HSYNC/ DCMI_VSYNC input hold time	1	-	

1. Guaranteed by characterization results.

Figure 49. DCMI timing diagram

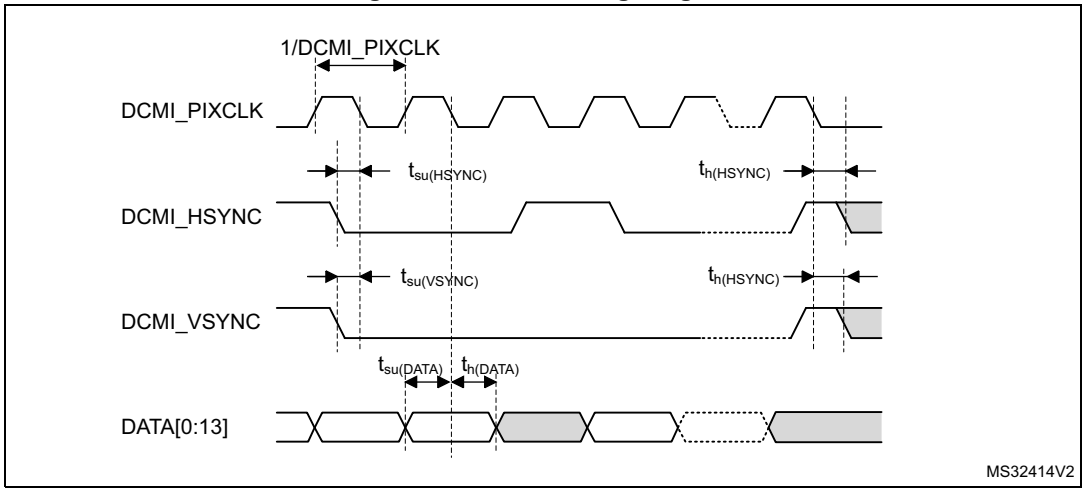

6.3.34 Parallel synchronous slave interface (PSSI) characteristics

Unless otherwise specified, the parameters given in *Table 103* and *Table 104* for PSSI are derived from tests performed under the ambient temperature, f_{HCLK} frequency and VDD supply voltage summarized in *Table 12: General operating conditions*.

Table 103. PSSI transmit characteristics(1)

Symbol	Parameter	Min	Max	Unit
-	Frequency ratio PSSI_PDCK/f_{HCLK}	-	0.4	-
PSSI_PDCK	PSSI Clock input	-	50	MHz
		-	35(2)	
D_{pixel}	PSSI Clock input duty cycle	30	70	%
t_{ov}(DATA)	Data output valid time	-	10	ns
-	-	-	14(2)	
t_{oh}(DATA)	Data output hold time	4.5	-	
$t_{ov(}$(DE)	DE output valid time	-	10	
t_{oh}(DE)	DE output hold time	4	-	
tsu(RDY)	RDY input setup time	0	-	
th(RDY)	RDY input hold time	0	-	

1. Guaranteed by characterization results.
2. This value is obtained by using PA9, PA10 or PH4 I/O.

Table 104. PSSI receive characteristics(1)

Symbol	Parameter	Min	Max	Unit
-	Frequency ratio PSSI_PDCK/f_{HCLK}	-	0.4	-
PSSI_PDCK	PSSI Clock input	-	110	MHz
D_{pixel}	PSSI Clock input duty cycle	30	70	%
t_{su}(DATA)	Data input setup time	1.5	-	ns
t_{h}(DATA)	Data input hold time	0.5	-	
$t_{su(}$(DE)	DE input setup time	2	-	
t_{h}(DE)	DE input hold time	1	-	
tov(RDY)	RDY output valid time	-	15	
toh(RDY)	RDY output hold time	5.5	-	

1. Guaranteed by characterization results.

6.3.35 LCD-TFT controller (LTDC) characteristics

Unless otherwise specified, the parameters given in *Table 105* for LCD-TFT are derived from tests performed under the ambient temperature, f_{HCLK} frequency and VDD supply voltage summarized in *Table 12: General operating conditions*, with the following configuration:

- LCD_CLK polarity: high
- LCD_DE polarity: low
- LCD_VSYNC and LCD_HSYNC polarity: high
- Pixel formats: 24 bits
- Output speed is set to OSPEEDRy[1:0] = 11
- Capacitive load C_L=30 pF
- Measurement points are done at CMOS levels: 0.5VDD
- IO Compensation cell activated.
- HSLV activated when $V_{DD} \leq 2.7$ V
- VOS level set to VOS0

Table 105. LTDC characteristics(1)

Symbol	Parameter		Min	Max	Unit
f_{CLK}	LTDC clock output frequency	2.7<V_{DD}<3.6 V, 20 pF	-	150	MHz
		2.7<V_{DD}<3.6 V		133	
		1.62<V_{DD}<3.6 V		90/76.5(2)	
D_{CLK}	LTDC clock output duty cycle		45	55	%
$t_{w(CLKH)}$, $t_{w(CLKL)}$	Clock High time, low time		$t_{w(CLK)}$//2−0.5	$t_{w(CLK)}$/2+0.5	ns
$t_{v(DATA)}$	Data output valid time	2.7<V_{DD}<3.6 V	-	2.0	
		1.62<V_{DD}<3.6 V		2.5/6.5(2)	
$t_{h(DATA)}$	Data output hold time		0	-	
$t_{v(HSYNC)}$, $t_{v(VSYNC)}$, $t_{v(DE)}$	HSYNC/VSYNC/DE output valid time	2.7<V_{DD}<3.6 V	-	1.5	
		1.62<V_{DD}<3.6 V	-	2.0	
$t_{h(HSYNC)}$, $t_{h(VSYNC)}$, $t_{h(DE)}$	HSYNC/VSYNC/DE output hold time		0	-	

1. Guaranteed by characterization results.
2. This value is valid when PA[9], PA[10], PA[11], PA[12], PA[15], PB[11], PH[4], PJ[8], PJ[9], PJ[10], PJ[11], PK[0], PK[1] or PK[2] is used.

Figure 50. LCD-TFT horizontal timing diagram

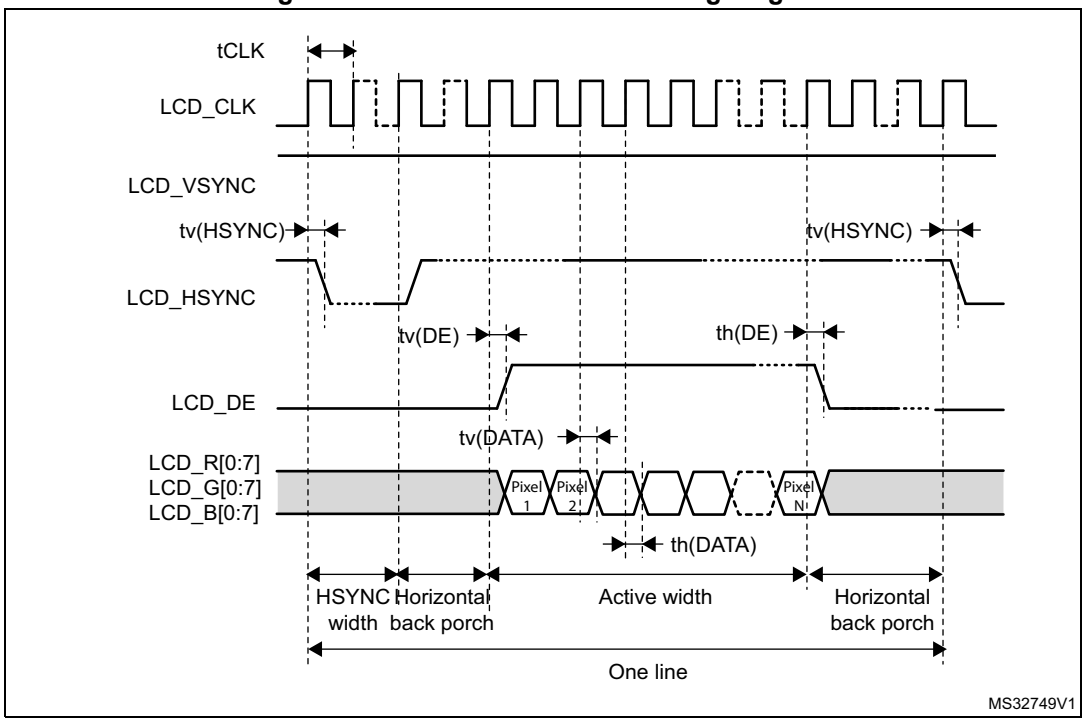

Figure 51. LCD-TFT vertical timing diagram

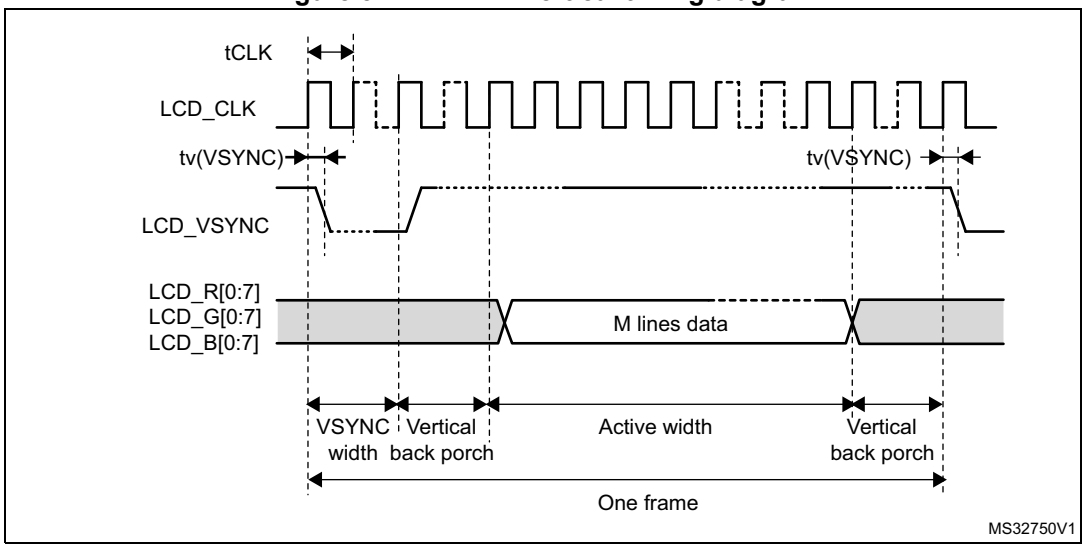

6.3.36 Timer characteristics

The parameters given in *Table 106* are guaranteed by design.

Refer to *Section 6.3.17: I/O port characteristics* for details on the input/output alternate function characteristics (output compare, input capture, external clock, PWM output).

Table 106. TIMx characteristics(1)(2)

Symbol	Parameter	Conditions(3)	Min	Max	Unit
$t_{res(TIM)}$	Timer resolution time	AHB/APBx prescaler=1 or 2 or 4, $f_{TIMxCLK}$ = 275 MHz	1	-	$t_{TIMxCLK}$
		AHB/APBx prescaler>4, $f_{TIMxCLK}$ = 137.5 MHz	1	-	$t_{TIMxCLK}$
f_{EXT}	Timer external clock frequency on CH1 to CH4	$f_{TIMxCLK}$ = 240 MHz	0	$f_{TIMxCLK}/2$	MHz
Res_{TIM}	Timer resolution		-	16/32	bit
t_{MAX_COUNT}	Maximum possible count with 32-bit counter	-	-	65536 × 65536	$t_{TIMxCLK}$

1. TIMx is used as a general term to refer to the TIM1 to TIM17 timers.
2. Guaranteed by design.
3. The maximum timer frequency on APB1 or APB2 is up to 275 MHz, by setting the TIMPRE bit in the RCC_CFGR register, if APBx prescaler is 1 or 2 or 4, then TIMxCLK = rcc_hclk1, otherwise TIMxCLK = 4x F_{rcc_pclkx1} or TIMxCLK = 4x F_{rcc_pclkx2}.

6.3.37 Low-power timer characteristics

The parameters given in *Table 107* are guaranteed by design.

Refer to *Section 6.3.17: I/O port characteristics* for details on the input/output alternate function characteristics (output compare, input capture, external clock, PWM output).

Table 107. LPTIMx characteristics(1)(2)

Symbol	Parameter	Min	Max	Unit
$t_{res(TIM)}$	Timer resolution time	1	-	$t_{TIMxCLK}$
$f_{LPTIMxCLK}$	Timer kernel clock	0	137.5	MHz
f_{EXT}	Timer external clock frequency on Input1 and Input2	0	$f_{LPTIMxCLK}/2$	
Res_{TIM}	Timer resolution	-	16	bit
t_{MAX_COUNT}	Maximum possible count	-	65536	$t_{TIMxCLK}$

1. LPTIMx is used as a general term to refer to the LPTIM1 to LPTIM5 timers.
2. Guaranteed by design.

6.3.38 Communication interfaces

I²C interface characteristics

The I²C interface meets the timings requirements of the I²C-bus specification and user manual revision 03 for:

- Standard-mode (Sm): with a bit rate up to 100 kbit/s
- Fast-mode (Fm): with a bit rate up to 400 kbit/s
- Fast-mode Plus (Fm+): with a bit rate up to 1 Mbit/s.

The I²C timings requirements are guaranteed by design when the I²C peripheral is properly configured (refer to RM0399 reference manual) and when the i2c_ker_ck frequency is greater than the minimum shown in the table below:

Table 108. Minimum i2c_ker_ck frequency in all I²C modes

Symbol	Parameter	Condition		Min	Unit
f(I2CCLK)	I2CCLK frequency	Standard-mode	-	2	MHz
		Fast-mode	Analog Filtre ON DNF=0	8	
			Analog Filtre OFF DNF=1	9	
		Fast-mode Plus	Analog Filtre ON DNF=0	17	
			Analog Filtre OFF DNF=1	16	-

The SDA and SCL I/O requirements are met with the following restrictions:

- The SDA and SCL I/O pins are not “true” open-drain. When configured as open-drain, the PMOS connected between the I/O pin and V_{DD} is disabled, but still present.
- The 20 mA output drive requirement in Fast-mode Plus is not supported. This limits the maximum load C_{Load} supported in Fm+, which is given by these formulas:

  $t_{r(SDA/SCL)}=0.8473xR_P * C_{Load}$

  $R_{P(min)}= (V_{DD}-V_{OL(max)})/I_{OL(max)}$

  Where R_P is the I2C lines pull-up. Refer to *Section 6.3.17: I/O port characteristics* for the I²C I/Os characteristics.

All I²C SDA and SCL I/Os embed an analog filter. Refer to the table below for the analog filter characteristics:

Table 109. I²C analog filter characteristics(1)

Symbol	Parameter	Min	Max	Unit
t_{AF}	Maximum pulse width of spikes that are suppressed by analog filter	50(2)	80(3)	ns

1. Guaranteed by characterization results.
2. Spikes with widths below $t_{AF(min)}$ are filtered.
3. Spikes with widths above $t_{AF(max)}$ are not filtered.

USART interface characteristics

Unless otherwise specified, the parameters given in *Table 110* for USART are derived from tests performed under the ambient temperature, f_{PCLKx} frequency and V_{DD} supply voltage conditions summarized in *Table 12: General operating conditions*, with the following configuration:

- Output speed is set to OSPEEDRy[1:0] = 11
- Capacitive load C_L = 30 pF
- Measurement points are done at CMOS levels: $0.5V_{DD}$
- IO Compensation cell activated.
- VOS level set to VOS0

Refer to *Section 6.3.17: I/O port characteristics* for more details on the input/output alternate function characteristics (NSS, CK, TX, RX for USART).

Table 110. USART characteristics(1)

Symbol	Parameter	Conditions	Min	Typ	Max	Unit
f_{CK}	USART clock frequency	Master mode, 1.62 V < V_{DD} < 3.6 V	-	-	17.0	MHz
		Slave receiver mode, 1.62 V < V_{DD} < 3.6 V			45.0	
		Slave transmitter mode, 1.62 V < V_{DD} < 3.6 V	-	-	27.0	
		Slave transmitter mode, 2.5 V < V_{DD} < 3.6 V			37.0	
$t_{su(NSS)}$	NSS setup time	Slave mode	t_{ker}+1	-	-	ns
$t_{h(NSS)}$	NSS hold time	Slave mode	2	-	-	
$t_{w(CKH)}$, $t_{w(CKL)}$	CK high and low time	Master mode	$1/f_{CK}/2-2$	$1/f_{CK}/2$	$1/f_{CK}/2+2$	
$t_{su(RX)}$	Data input setup time	Master mode	16	-	-	
		Slave mode	1.0	-	-	
$t_{h(RX)}$	Data input hold time	Master mode	0	-	-	
		Slave mode	2.0	-	-	
$t_{v(TX)}$	Data output valid time	Slave mode, , 1.62 V < V_{DD} < 3.6 V	-	12.0	18	
		Slave mode, , 2.5 V < V_{DD} < 3.6 V	-	12.0	13.5	
		Master mode	-	0.5	1	
$t_{h(TX)}$	Data output hold time	Slave mode	9	-	-	
		Master mode	0	-	-	

1. Guaranteed by characterization results.

Figure 52. USART timing diagram in master mode

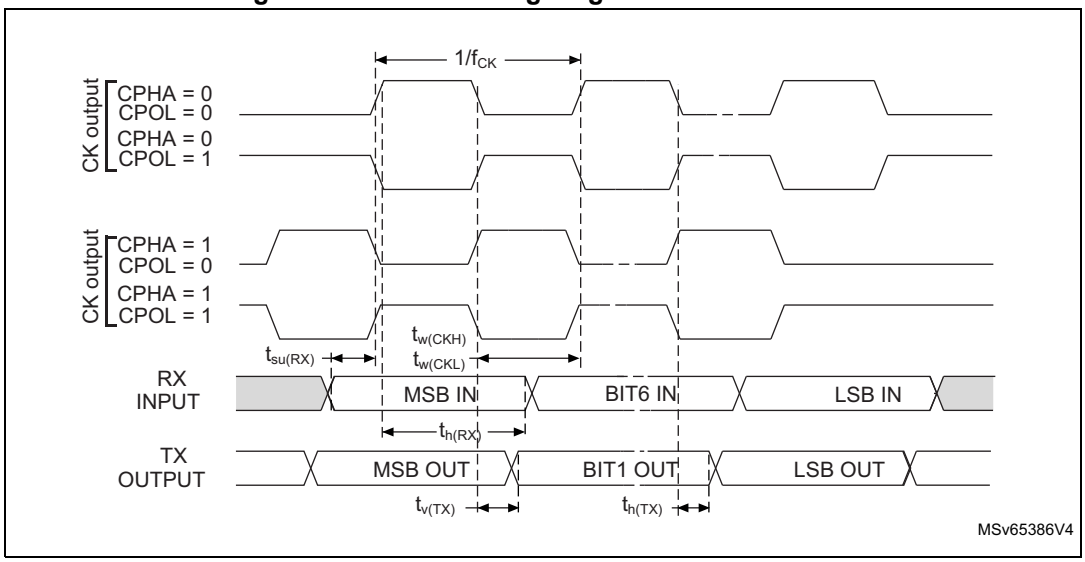

1. Measurement points are done at $0.5V_{DD}$ and with external C_L = 30 pF.

Figure 53. USART timing diagram in slave mode

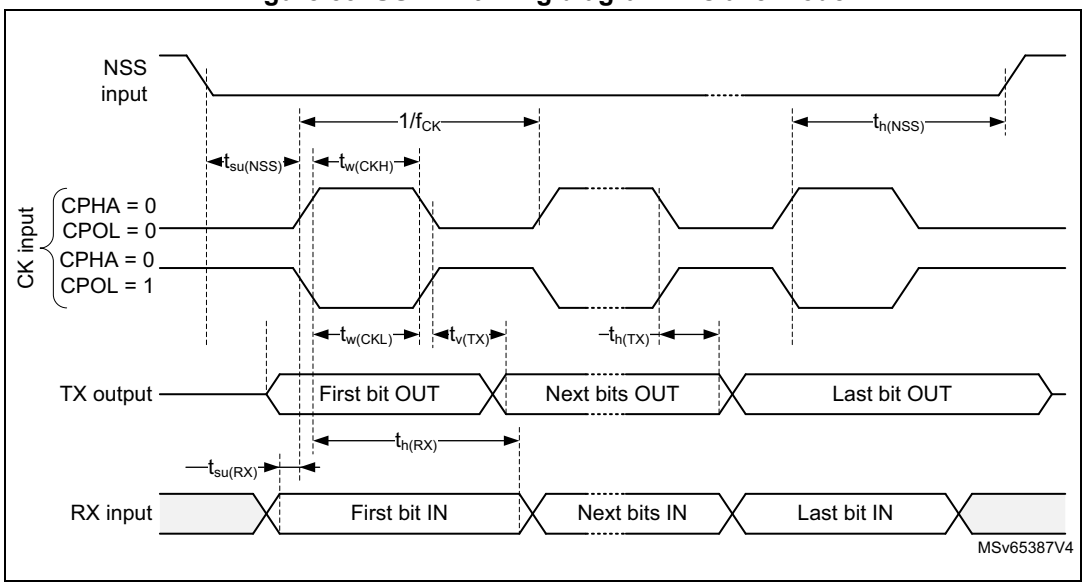

SPI interface characteristics

Unless otherwise specified, the parameters given in *Table 111* for SPI are derived from tests performed under the ambient temperature, f_{PCLKx} frequency and V_{DD} supply voltage conditions summarized in *Table 12: General operating conditions*, with the following configuration:

- Output speed is set to OSPEEDRy[1:0] = 11
- Capacitive load C_L = 30 pF
- Measurement points are done at CMOS levels: $0.5V_{DD}$
- IO Compensation cell activated.
- HSLV activated when VDD ≤ 2.7 V
- VOS level set to VOS0

Refer to *Section 6.3.17: I/O port characteristics* for more details on the input/output alternate function characteristics (SS, SCK, MOSI, MISO for SPI).

Table 111. SPI characteristics(1)(2)

Symbol	Parameter	Conditions	Min	Typ	Max	Unit
f_{SCK}	SPI clock frequency	Master mode, 2.7 V < V_{DD} < 3.6 V, SPI1, 2, 3	-	-	125	MHz
		Master mode, 1.62 V < V_{DD} < 3.6 V, SPI1, 2, 3			80/66(3)	
		Master mode, 1.62 V < V_{DD} < 3.6 V, SPI4, 5, 6			68.5	
		Slave receiver mode, 1.62 V < V_{DD} < 3.6 V, SPI1, 2, 3			100	
		Slave receiver mode, 1.62 V < V_{DD} < 3.6 V, SPI4, 5, 6			68.5	
		Slave mode transmitter/full duplex, 2.7 V < V_{DD} < 3.6 V			45	
		Slave mode transmitter/full duplex, 1.62 V < V_{DD} < 3.6 V			42.5/31(4)	
$t_{su(NSS)}$	NSS setup time	Slave mode	2	-	-	-
$t_{h(NSS)}$	NSS hold time	Slave mode	1	-	-	
$t_{w(SCKH)}$, $t_{w(SCKL)}$	SCK high and low time	Master mode	$t_{SCK}/2-1$(5)	$t_{SCK}/2$(5)	$t_{SCK}/2+1$(5)	

Table 111. SPI characteristics(1)(2) (continued)

Symbol	Parameter	Conditions	Min	Typ	Max	Unit
$t_{su(MI)}$	Data input setup time	Master mode	2.5	-	-	ns
$t_{su(SI)}$		Slave mode	1	-	-	
$t_{h(MI)}$	Data input hold time	Master mode	3	-	-	
$t_{h(SI)}$		Slave mode	1.5	-	-	
$t_{a(SO)}$	Data output access time	Slave mode	9	13	27	
$t_{dis(SO)}$	Data output disable time	Slave mode	0	1	5	
$t_{v(SO)}$	Data output valid time	Slave mode, 2.7 V < V_{DD} < 3.6 V	-	7.5	11	
		Slave mode, 1.62 V < V_{DD} < 3.6 V	-	7.5	12/16(4)	
$t_{v(MO)}$		Master mode, 1.62 V < V_{DD} < 3.6 V	-	1	1.5/5.5(6)	
$t_{h(SO)}$	Data output hold time	Slave mode	7	-	-	
$t_{h(MO)}$		Master mode	0.5	-	-	

1. Guaranteed by characterization results.
2. The values given in the above table might be degraded when PC3_C/PC2_C I/Os are used (not available on all packages).
3. This value is obtained by using PA9 or PA12 I/O.
4. This value is obtained by using PC2 or PJ11 I/O.
5. $t_{SCK} = t_{ker_ck}$ * baud rate prescaler.
6. This value is obtained by using PC3 or PJ10 I/O.

Figure 54. SPI timing diagram - slave mode and CPHA = 0

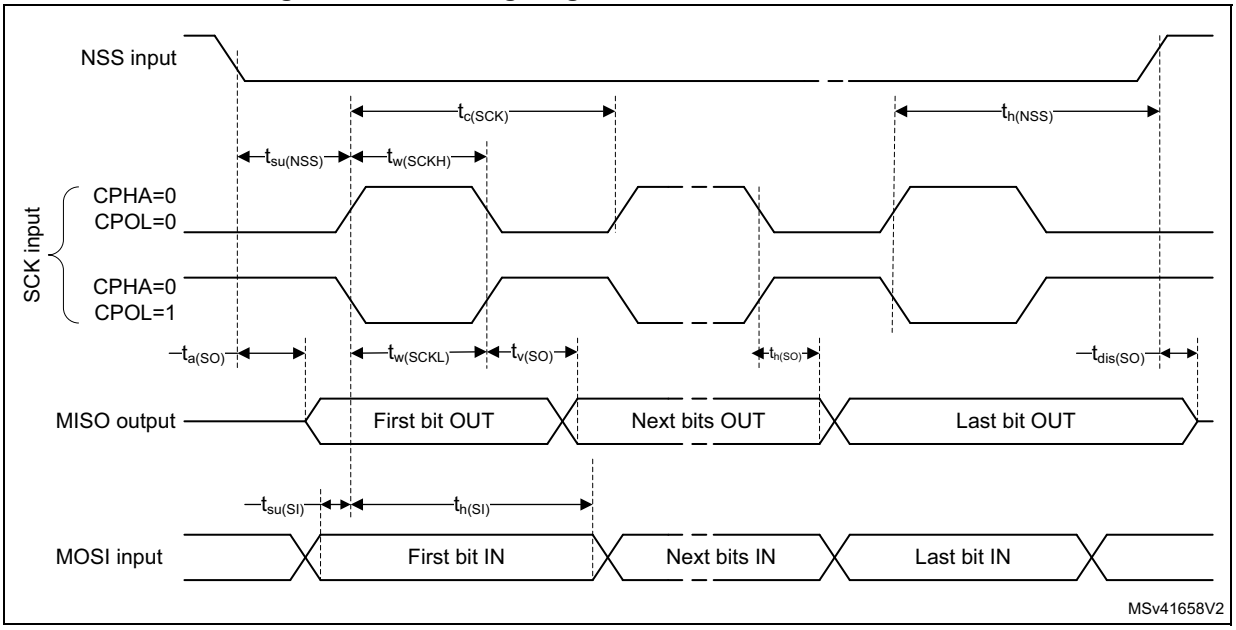

Figure 55. SPI timing diagram - slave mode and CPHA = 1

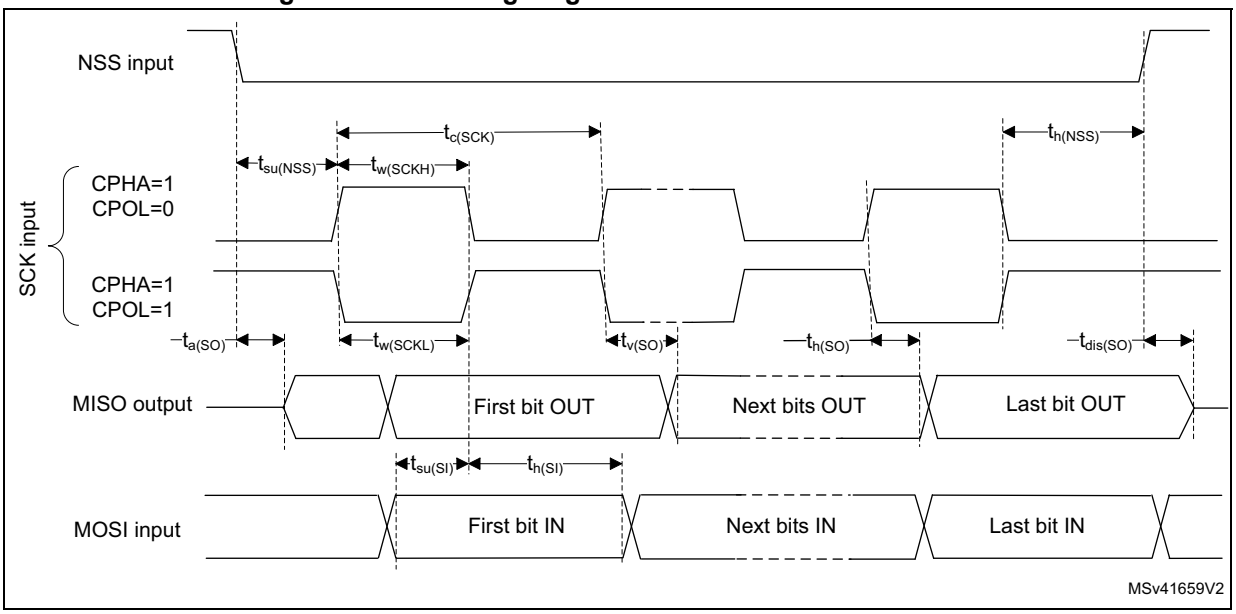

Figure 56. SPI timing diagram - master mode

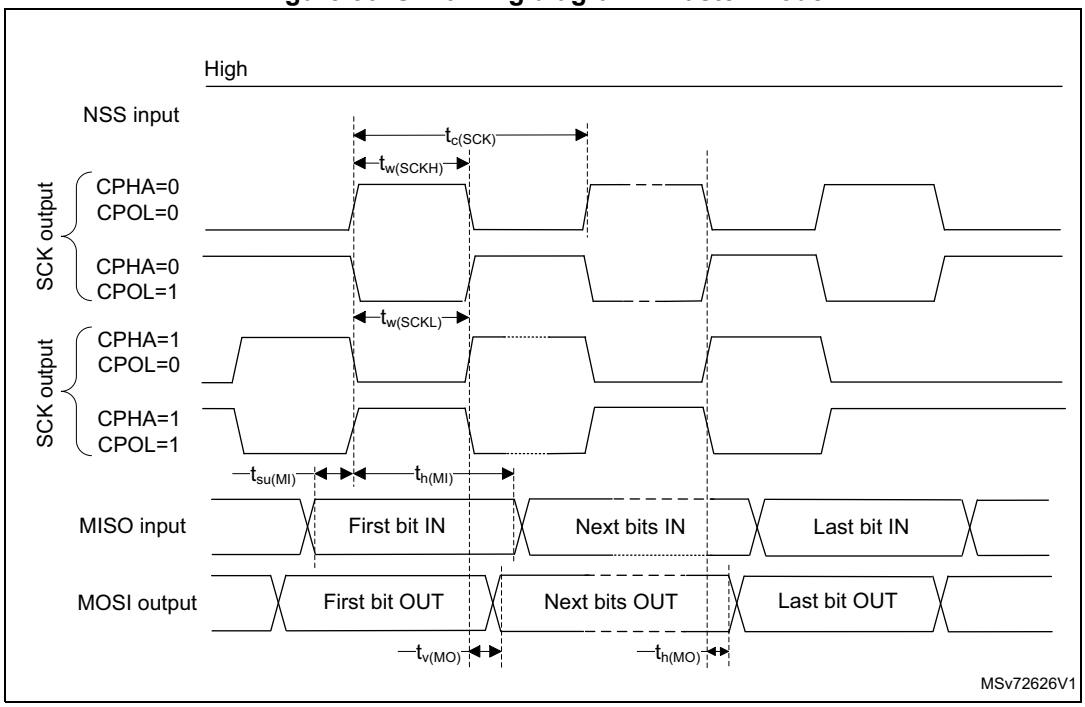

I²S Interface characteristics

Unless otherwise specified, the parameters given in *Table 112* for I²S are derived from tests performed under the ambient temperature, f_{PCLKx} frequency and V_{DD} supply voltage conditions summarized in *Table 12: General operating conditions*, with the following configuration:

- Output speed is set to OSPEEDRy[1:0] = 11
- Capacitive load C_L = 30 pF
- Measurement points are done at CMOS levels: $0.5V_{DD}$
- IO Compensation cell activated.
- HSLV activated when VDD ≤ 2.7 V
- VOS level set to VOS0

Refer to *Section 6.3.17: I/O port characteristics* for more details on the input/output alternate function characteristics (CK,SD,WS).

Table 112. I²S dynamic characteristics(1)

Symbol	Parameter	Conditions	Min	Max	Unit
f_{MCK}	I²S main clock output	-	-	50	MHz
		Master transmitter	-	50/40(2)	
		Master receiver	-	50/40(2)	
		Slave transmitter	-	41.5/31(3)	
		Slave receiver	-	50	
$t_{v(WS)}$	WS valid time	Master mode	-	2/6(4)	ns
$t_{h(WS)}$	WS hold time		1	-	
$t_{su(WS)}$	WS setup time	Slave mode	3	-	
$t_{h(WS)}$	WS hold time		1	-	
$t_{su(SD_MR)}$	Data input setup time	Master receiver	2.5	-	
$t_{su(SD_SR)}$		Slave receiver	1	-	
$t_{h(SD_MR)}$	Data input hold time	Master receiver	3	-	
$t_{h(SD_SR)}$		Slave receiver	1.5	-	
$t_{v(SD_ST)}$	Data output valid time	Slave transmitter (after enable edge)	-	12/16(3)	
$t_{v(SD_MT)}$		Master transmitter (after enable edge)	-	2/6(5)	
$t_{h(SD_ST)}$	Data output hold time	Slave transmitter (after enable edge)	6.5	-	
$t_{h(SD_MT)}$		Master transmitter (after enable edge)	0.5	-	

1. Guaranteed by characterization results.
2. This value is obtained when PA9 or PA12 are used.
3. This value is obtained when PC2 is used.
4. This value is obtained when PA11 or PA15 are used.

5. This value is obtained when PC3 is used.

Figure 57. I²S slave timing diagram (Philips protocol)(1)

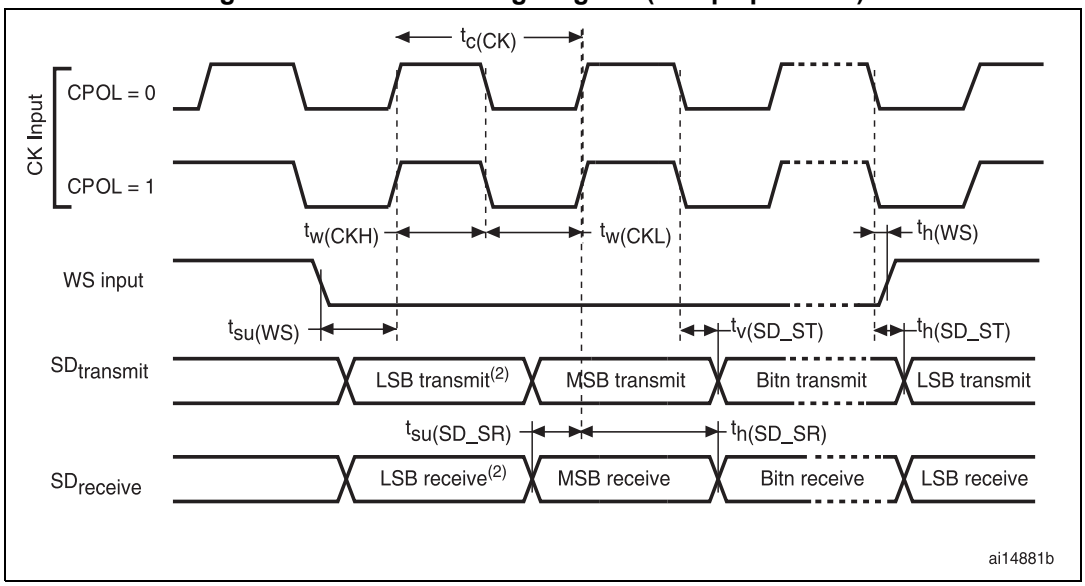

1. LSB transmit/receive of the previously transmitted byte. No LSB transmit/receive is sent before the first byte.

Figure 58. I²S master timing diagram (Philips protocol)(1)

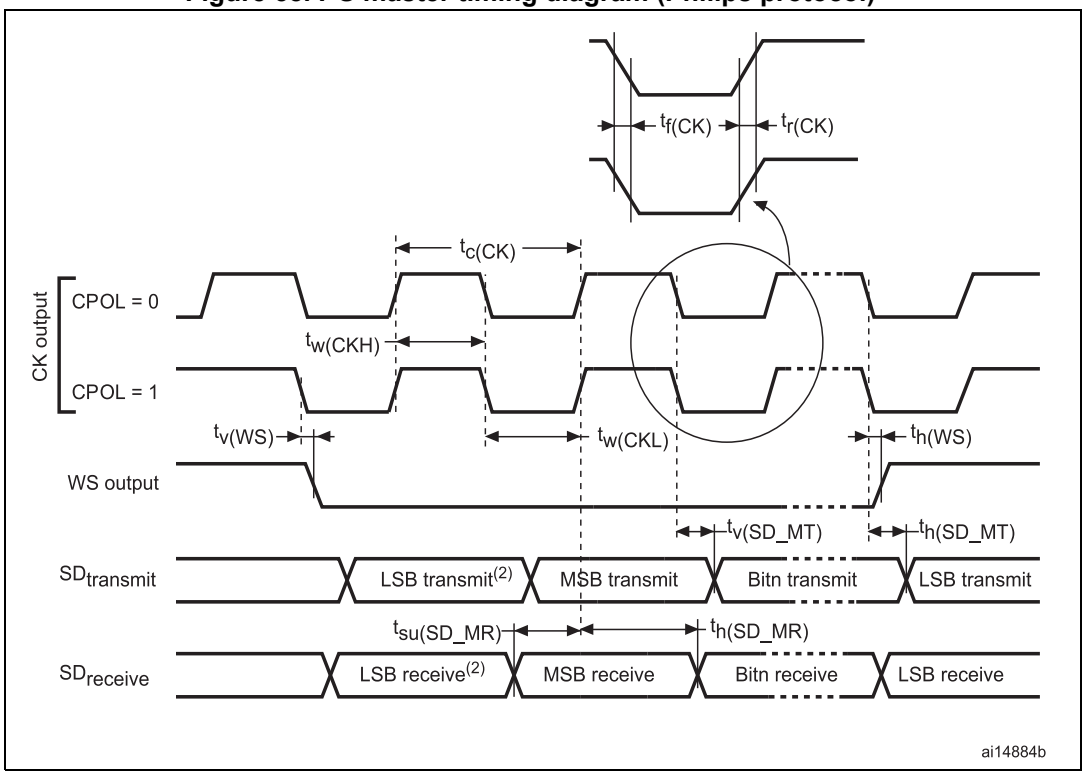

1. LSB transmit/receive of the previously transmitted byte. No LSB transmit/receive is sent before the first byte.

SAI characteristics

Unless otherwise specified, the parameters given in *Table 113* for SAI are derived from tests performed under the ambient temperature, f_{PCLKx} frequency and VDD supply voltage conditions summarized in *Table 12: General operating conditions*, with the following configuration:

- Output speed is set to OSPEEDRy[1:0] = 10
- Capacitive load C_L = 30 pF
- IO Compensation cell activated.
- Measurement points are done at CMOS levels: $0.5V_{DD}$
- VOS level set to VOS0

Refer to *Section 6.3.17: I/O port characteristics* for more details on the input/output alternate function characteristics (SCK,SD,WS).

Table 113. SAI characteristics(1)

Symbol	Parameter	Conditions	Min	Max	Unit
f_{MCK}	SAI Main clock output	-	-	50	MHz
f_{CK}	SAI clock frequency(2)	Master transmitter, 2.7 V ≤ V_{DD} ≤ 3.6 V	-	45	
		Master transmitter, 1.62 V ≤ V_{DD} ≤ 3.6 V	-	32	
		Master receiver, 1.62 V ≤ V_{DD} ≤ 3.6 V	-	32	
		Slave transmitter, 2.7 V ≤ V_{DD} ≤ 3.6 V	-	47.5	
		Slave transmitter, 1.62 V ≤ V_{DD} ≤ 3.6 V	-	41.5	
		Slave receiver, 1.62 V ≤ V_{DD} ≤ 3.6 V	-	50	

Table 113. SAI characteristics(1) (continued)

Symbol	Parameter	Conditions	Min	Max	Unit
$t_{v(FS)}$	F_S valid time	Master mode, 2.7 V ≤ V_{DD} ≤ 3.6 V	-	11	ns
		Master mode, 1.62 V ≤ V_{DD} ≤ 3.6 V	-	15.5	
$t_{su(FS)}$	F_S setup time	Slave mode	2.5	-	
$t_{h(FS)}$	F_S hold time	Master mode	6	-	
		Slave mode	0.5	-	
$t_{su(SD_A_MR)}$	Data input setup time	Master receiver	3	-	
$t_{su(SD_B_SR)}$		Slave receiver	3.5	-	
$t_{h(SD_A_MR)}$	Data input hold time	Master receiver	3.5	-	
$t_{h(SD_B_SR)}$		Slave receiver	0	-	
$t_{v(SD_B_ST)}$	Data output valid time	Slave transmitter (after enable edge), 2.7 V ≤ V_{DD} ≤ 3.6 V	-	10.5	
		Slave transmitter (after enable edge), 1.62 V ≤ V_{DD} ≤ 3.6 V	-	12	
$t_{h(SD_B_ST)}$	Data output hold time	Slave transmitter (after enable edge)	6.5	-	
$t_{v(SD_A_MT)}$	Data output valid time	Master transmitter (after enable edge), 2.7 V ≤ V_{DD} ≤ 3.6 V	-	10.5	
		Master transmitter (after enable edge), 1.62 V ≤ V_{DD} ≤ 3.6 V	-	14.5	
$t_{h(SD_A_MT)}$	Data output hold time	Master transmitter (after enable edge)	6	-	

1. Guaranteed by characterization results.
2. APB clock frequency must be at least twice SAI clock frequency.

Figure 59. SAI master timing waveforms

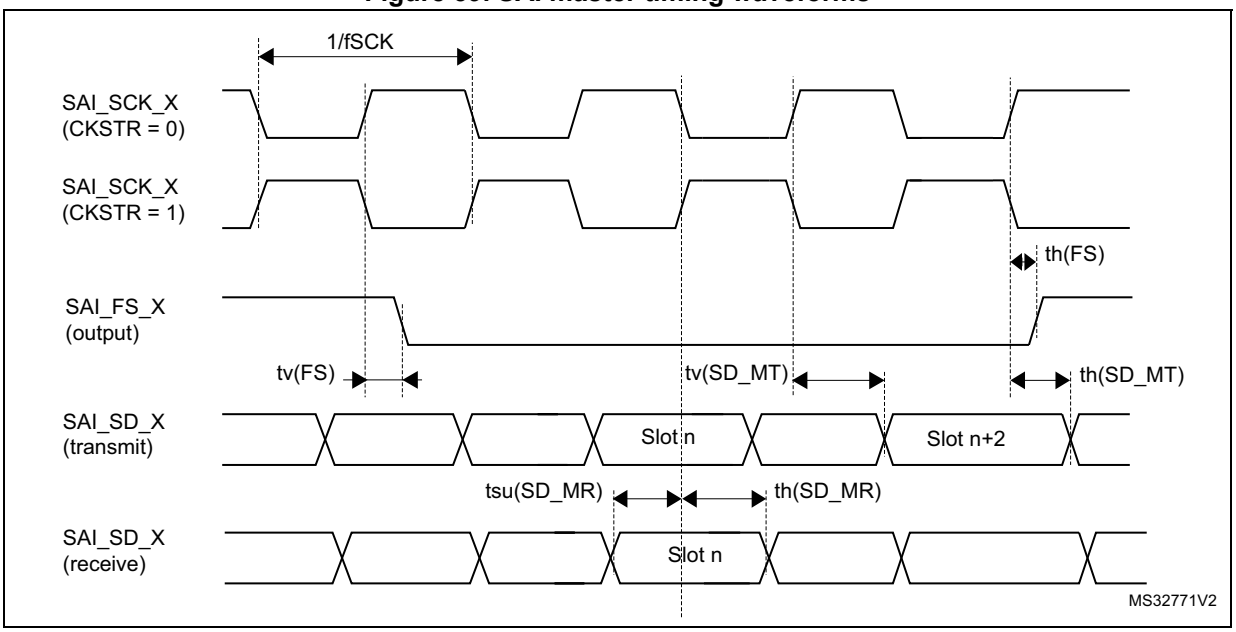

Figure 60. SAI slave timing waveforms

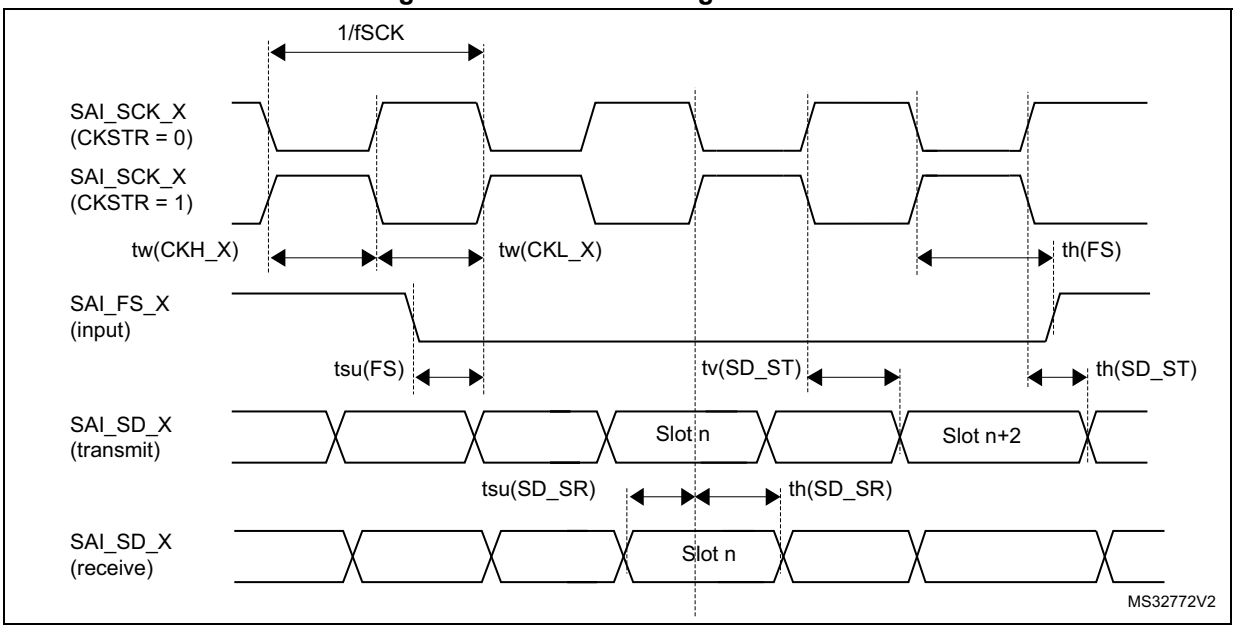

MDIO characteristics

Unless otherwise specified, the parameters given in *Table 114* for the MDIO are derived from tests performed under the ambient temperature, f_{PCLKx} frequency and VDD supply voltage conditions summarized in *Table 12: General operating conditions*, with the following configuration:

- Output speed is set to OSPEEDRy[1:0] = 10
- I/O Compensation cell activated.
- Measurement points are done at CMOS levels: $0.5V_{DD}$
- HSLV activated when $V_{DD} \leq 2.7$ V
- VOS level set to VOS0

Table 114. MDIO slave timing parameters

Symbol	Parameter	Min	Typ	Max	Unit
F_{MDC}	Management Data Clock	-	-	30	MHz
$t_{d(MDIO)}$	Management Data Iput/output output valid time	8	10	18	ns
$t_{su(MDIO)}$	Management Data Iput/output setup time	1	-	-	
$t_{h(MDIO)}$	Management Data Iput/output hold time	1	-	-	

Figure 61. MDIO slave timing diagram

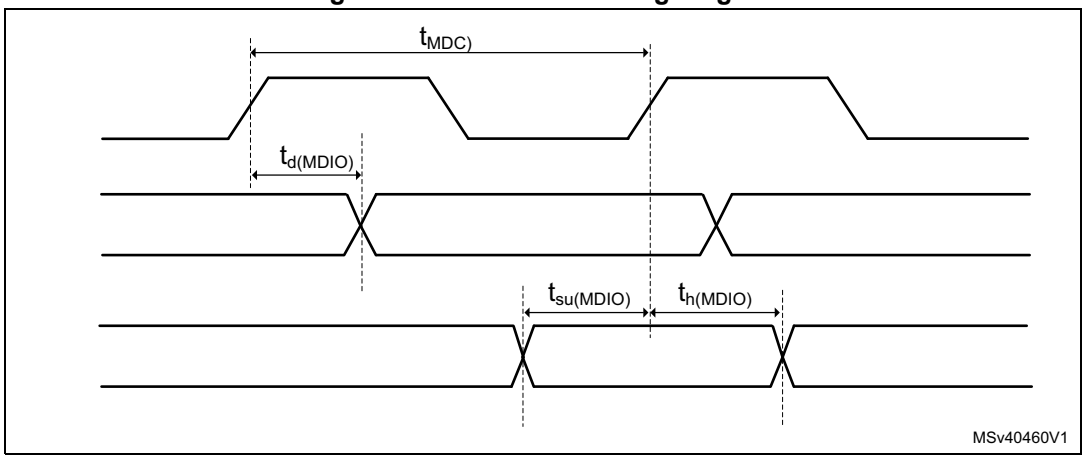

SD/SDIO MMC card host interface (SDMMC) characteristics

Unless otherwise specified, the parameters given in *Table 115* and *Table 116* for SDIO are derived from tests performed under the ambient temperature, f_{PCLKx} frequency and VDD supply voltage summarized in *Table 12: General operating conditions*, with the following configuration:

- Output speed is set to OSPEEDRy[1:0] = 11
- Capacitive load C_L=30 pF
- Measurement points are done at CMOS levels: $0.5V_{DD}$
- IO Compensation cell activated.
- HSLV activated when $V_{DD} \leq 2.7$ V
- VOS level set to VOS0

Refer to *Section 6.3.17: I/O port characteristics* for more details on the input/output characteristics.

Table 115. Dynamics characteristics: SD / MMC characteristics, V_{DD} = 2.7 to 3.6 V(1)(2)

Symbol	Parameter	Conditions	Min	Typ	Max	Unit
f_{PP}	Clock frequency in data transfer mode	-	0	-	120	MHz
-	SDIO_CK/fPCLK2 frequency ratio	-	-	-	8/3	-
$t_{W(CKL)}$	Clock low time	f_{PP} =52MHz	8.5	9.5	-	ns
$t_{W(CKH)}$	Clock high time		8.5	9.5	-	
CMD, D inputs (referenced to CK) in eMMC legacy/SDR/DDR and SD HS/SDR/DDR mode						
t_{ISU}	Input setup time HS	-	2.5	-	-	ns
t_{IH}	Input hold time HS	-	0.5	-	-	
t_{IDW}(3)	Input valid window (variable window)	-	1.5	-	-	
CMD, D outputs (referenced to CK) in eMMC legacy/SDR/DDR and SD HS/SDR/DDR mode						
t_{OV}	Output valid time HS	-	-	5.5	6	ns
t_{OH}	Output hold time HS	-	4.5	-	-	

Table 115. Dynamics characteristics: SD / MMC characteristics, V_{DD} = 2.7 to 3.6 V(1)(2)

Symbol	Parameter	Conditions	Min	Typ	Max	Unit
CMD, D inputs (referenced to CK) in SD default mode						
t_{ISUD}	Input setup time SD	-	1.5		-	ns
t_{IHD}	Input hold time SD	-	0.5		-	
CMD, D outputs (referenced to CK) in SD default mode						
t_{OVD}	Output valid default time SD	-	-	1	1	ns
t_{OHD}	Output hold default time SD	-	0	-	-	

1. Guaranteed by characterization results.
2. Above 100 MHz, C_L = 20 pF.
3. The minimum window of time where the data needs to be stable for proper sampling in tuning mode.

Table 116. Dynamics characteristics: eMMC characteristics VDD = 1.71V to 1.9V(1)(2)

Symbol	Parameter	Conditions	Min	Typ	Max	Unit
f_{PP}	Clock frequency in data transfer mode	-	0	-	85	MHz
-	SDIO_CK/fPCLK2 frequency ratio	-	-	-	8/3	-
$t_{W(CKL)}$	Clock low time	f_{PP} =52 MHz	8.5	9.5	-	ns
$t_{W(CKH)}$	Clock high time		8.5	9.5	-	
CMD, D inputs (referenced to CK) in eMMC mode						
t_{ISU}	Input setup time HS	-	1.5	-	-	ns
t_{IH}	Input hold time HS	-	1.5	-	-	
t_{IDW}(3)	Input valid window (variable window)	-	3.5	-	-	
CMD, D outputs (referenced to CK) in eMMC mode						
t_{OVD}	Output valid time HS	-	-	6	6.5	ns
t_{OHD}	Output hold time HS	-	5.5	-	-	

1. Guaranteed by characterization results.
2. C_L = 20 pF.
3. The minimum window of time where the data needs to be stable for proper sampling in tuning mode.

Figure 62. SD high-speed mode

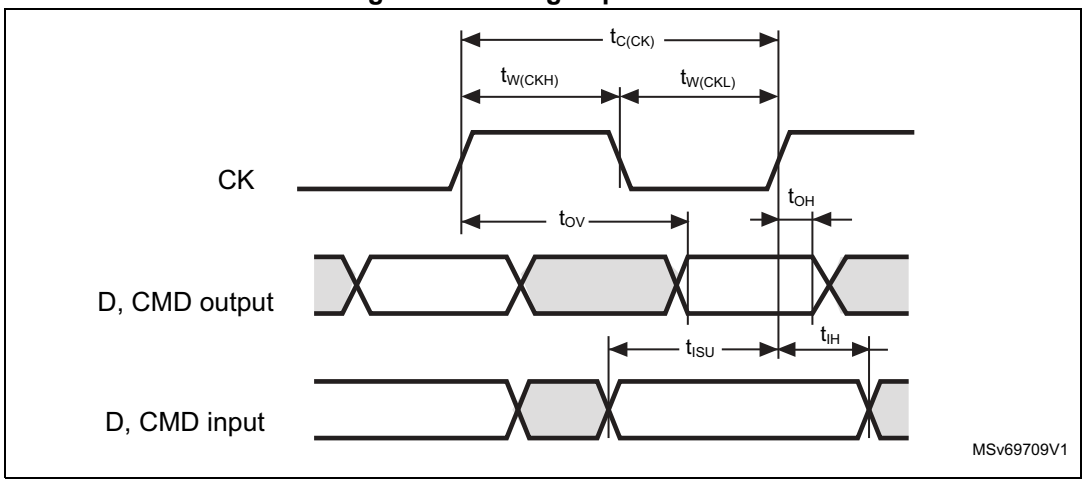

Figure 63. SD default mode

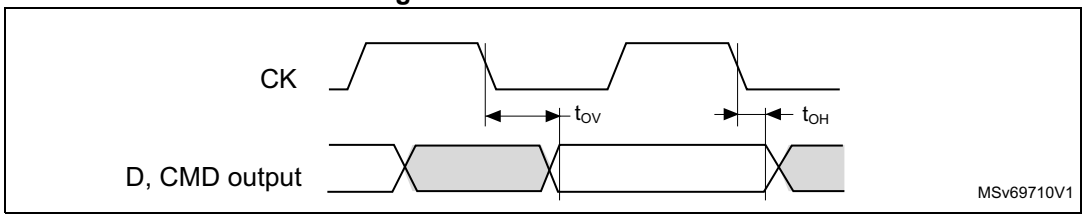

Figure 64. SDMMC DDR mode

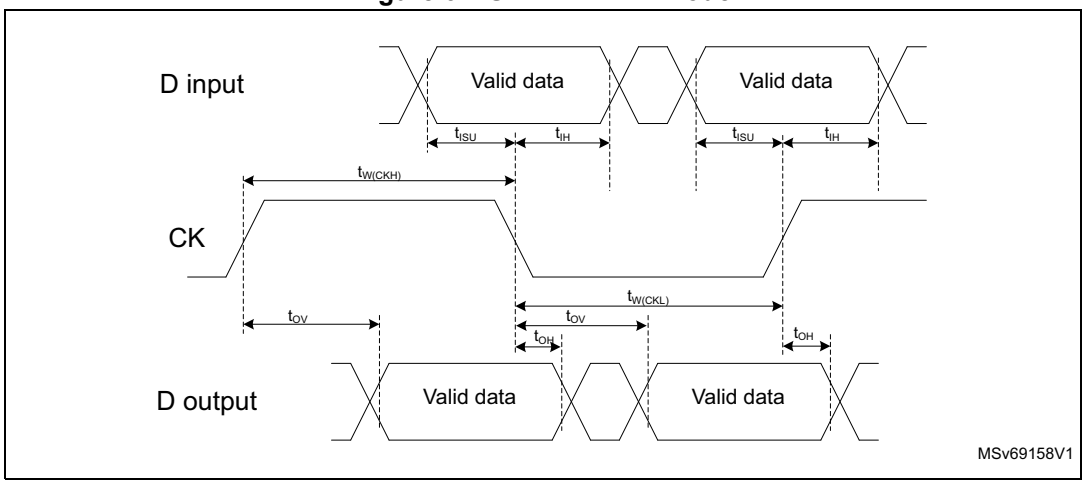

USB OTG_FS characteristics

Unless otherwise specified, the parameters given in *Table 118* for ULPI are derived from tests performed under the ambient temperature, f_{PCLKx} frequency and V_{DD} supply voltage summarized in *Table 12: General operating conditions*, with the following configuration:

- Output speed is set to OSPEEDRy[1:0] = 11
- Capacitive load C_L=20 pF
- Measurement points are done at CMOS levels: $0.5V_{DD}$
- IO Compensation cell activated.
- VOS level set to VOS0

Refer to *Section 6.3.17: I/O port characteristics* for more details on the input/output characteristics.

Table 117. USB OTG_FS electrical characteristics

Symbol	Parameter	Condition	Min	Typ	Max	Unit
$V_{DD33USB}$	USB transceiver operating voltage	-	3.0(1)	-	3.6	V
R_{PUI}	Embedded USB_DP pull-up value during idle	-	900	1250	1600	Ω
R_{PUR}	Embedded USB_DP pull-up value during reception	-	1400	2300	3200	
Z_{DRV}	Output driver impedance(2)	Driver high and low	28	36	44	

1. The USB functionality is ensured down to 2.7 V. However, not all USB electrical characteristics are degraded in the 2.7 to 3.0 V voltage range.
2. No external termination series resistors are required on USB_DP (D+) and USB_DM (D-); the matching impedance is already included in the embedded driver.

USB OTG_HS characteristics

Unless otherwise specified, the parameters given in *Table 118* for ULPI are derived from tests performed under the ambient temperature, f_{PCLKx} frequency and V_{DD} supply voltage summarized in *Table 12: General operating conditions*, with the following configuration:

- Output speed is set to OSPEEDRy[1:0] = 11
- Capacitive load C_L=20 pF
- Measurement points are done at CMOS levels: $0.5V_{DD}$
- IO Compensation cell activated.
- VOS level set to VOS0

Refer to *Section 6.3.17: I/O port characteristics* for more details on the input/output characteristics.

Table 118. Dynamics characteristics: USB ULPI(1)

Symbol	Parameter	Condition	Min	Typ	Max	Unit
t_{SC}	Control in (ULPI_DIR , ULPI_NXT) setup time	-	5.5	-	-	ns
t_{HC}	Control in (ULPI_DIR, ULPI_NXT) hold time	-	0	-	-	
t_{SD}	Data in setup time	-	2.5	-	-	
t_{HD}	Data in hold time	-	0	-	-	
t_{DC}/t_{DD}	Control/Datal output delay	2.7 V < V_{DD} < 3.6 V, C_L = 20 pF	-	6.0	8.0	
		1.71 V < V_{DD} < 3.6 V , C_L = 15 pF	-	6.0	12	

1. Guaranteed by characterization results.

Figure 65. ULPI timing diagram

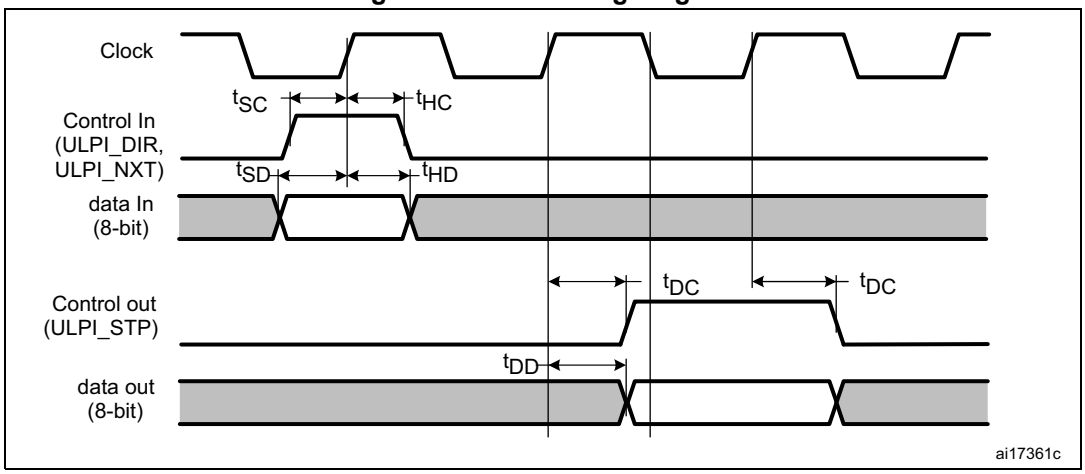

Ethernet interface characteristics

Unless otherwise specified, the parameters given in *Table 119*, *Table 120* and *Table 121* for SMI, RMII and MII are derived from tests performed under the ambient temperature, $f_{rcc_c_ck}$ frequency and V_{DD} supply voltage conditions summarized in *Table 12: General operating conditions*, with the following configuration:

- Output speed is set to OSPEEDRy[1:0] = 10
- Capacitive load C_L=20 pF
- Measurement points are done at CMOS levels: $0.5V_{DD}$
- IO Compensation cell activated.
- HSLV activated when VDD ≤ 2.7 V
- VOS level set to VOS1

Due to timing constraint Pxy_C I/Os cannot be used as ethernet signals.

Refer to *Section 6.3.17: I/O port characteristics* for more details on the input/output characteristics:

Table 119. Dynamics characteristics: Ethernet MAC signals for SMI (1)

Symbol	Parameter	Min	Typ	Max	Unit
t_{MDC}	MDC cycle time(2.5 MHz)	400	400	403	ns
$T_{d(MDIO)}$	Write data valid time	0.5	1.5	4	
$t_{su(MDIO)}$	Read data setup time	12.5	-	-	
$t_{h(MDIO)}$	Read data hold time	0	-	-	

1. Guaranteed by characterization results.

Figure 66. Ethernet SMI timing diagram

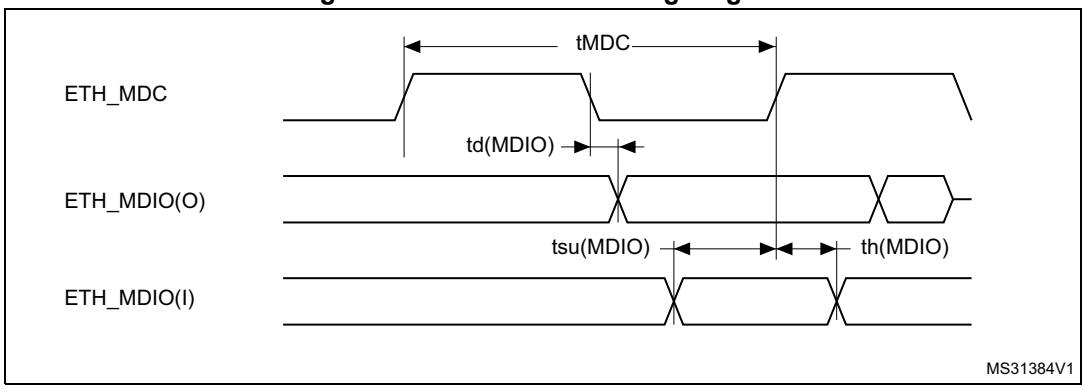

Table 120. Dynamics characteristics: Ethernet MAC signals for RMII (1)

Symbol	Parameter	Min	Typ	Max	Unit
$t_{su(RXD)}$	Receive data setup time	2	-	-	ns
$t_{ih(RXD)}$	Receive data hold time	2	-	-	
$t_{su(CRS)}$	Carrier sense setup time	1.5	-	-	
$t_{ih(CRS)}$	Carrier sense hold time	1.5	-	-	
$t_{d(TXEN)}$	Transmit enable valid delay time	8	9	10.5	
$t_{d(TXD)}$	Transmit data valid delay time	7	8	9.5	

1. Guaranteed by characterization results.

Figure 67. Ethernet RMII timing diagram

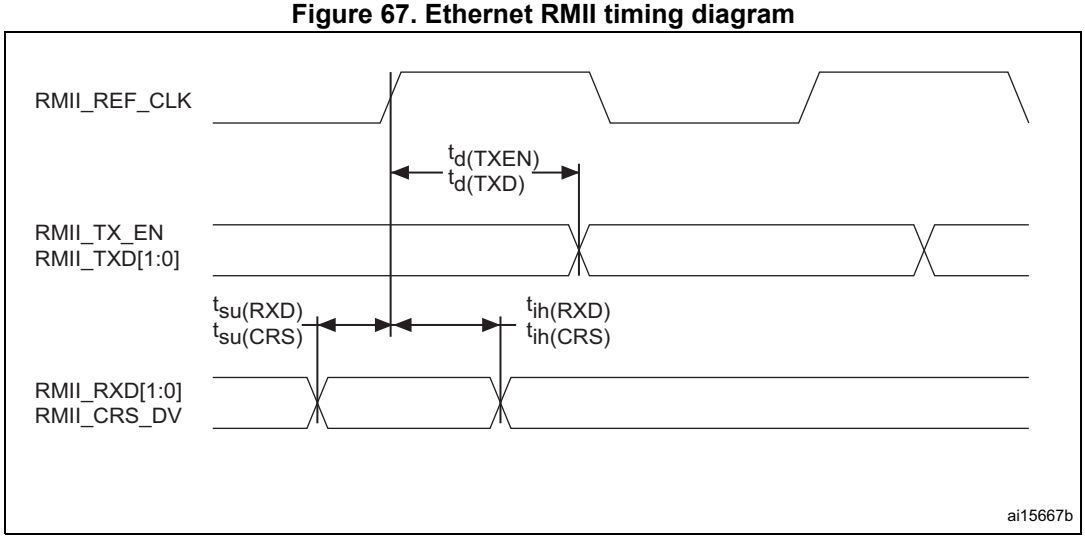

Table 121. Dynamics characteristics: Ethernet MAC signals for MII (1)

Symbol	Parameter	Min	Typ	Max	Unit
$t_{su(RXD)}$	Receive data setup time	2.0	-	-	ns
$t_{ih(RXD)}$	Receive data hold time	2.0	-	-	
$t_{su(DV)}$	Data valid setup time	1.5	-	-	
$t_{ih(DV)}$	Data valid hold time	1.5	-	-	
$t_{su(ER)}$	Error setup time	1.5	-	-	
$t_{ih(ER)}$	Error hold time	0.5	-	-	
$t_{d(TXEN)}$	Transmit enable valid delay time	9.0	11	19	
$t_{d(TXD)}$	Transmit data valid delay time	8.5	10	19	

1. Guaranteed by characterization results.

Figure 68. Ethernet MII timing diagram

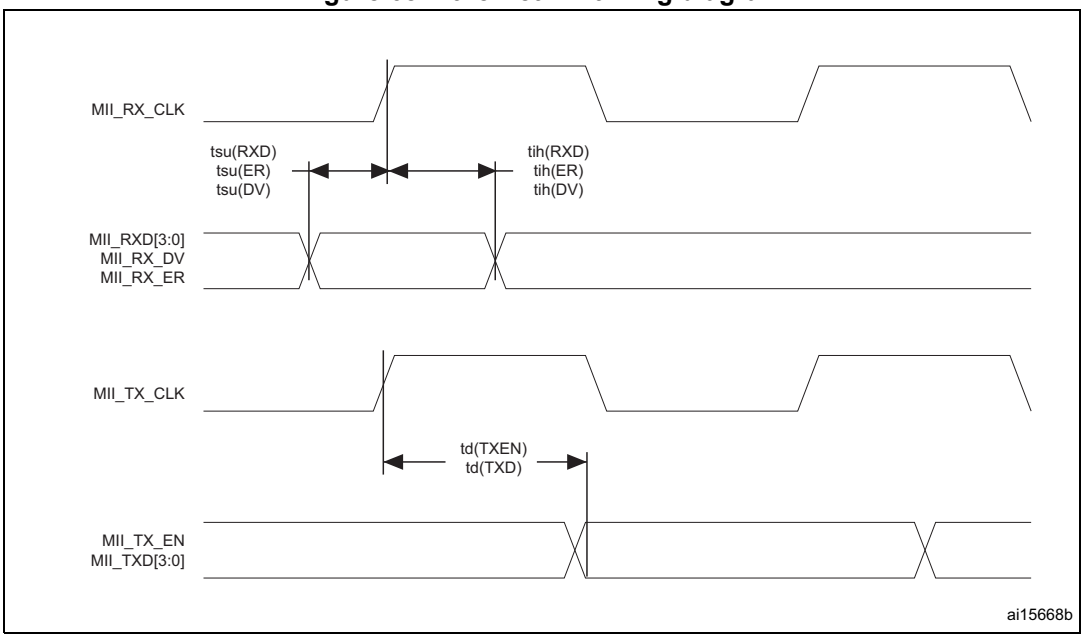

JTAG/SWD interface characteristics

Unless otherwise specified, the parameters given in *Table 122* and *Table 123* for JTAG/SWD are derived from tests performed under the ambient temperature, $f_{rcc_c_ck}$ frequency and V_{DD} supply voltage summarized in *Table 12: General operating conditions*, with the following configuration:

- Output speed is set to OSPEEDRy[1:0] = 11
- Capacitive load C_L=30 pF
- Measurement points are done at CMOS levels: $0.5V_{DD}$
- VOS level set to VOS0

Refer to *Section 6.3.17: I/O port characteristics* for more details on the input/output characteristics:

Table 122. Dynamics JTAG characteristics

Symbol	Parameter	Conditions	Min	Typ	Max	Unit
F_{pp}	T_{CK} clock frequency	2.7V <V_{DD}< 3.6 V	-	-	37	MHz
$1/t_{c(TCK)}$		1.62 <V_{DD}< 3.6 V	-	-	27.5	
$ti_{su(TMS)}$	TMS input setup time	-	2.5	-	-	
$ti_{h(TMS)}$	TMS input hold time	-	1	-	-	
$ti_{su(TDI)}$	TDI input setup time	-	1.5	-	-	-
$ti_{h(TDI)}$	TDI input hold time	-	1	-	-	-
$t_{ov(TDO)}$	TDO output valid time	2.7V <V_{DD}< 3.6 V	-	8	13.5	-
		1.62 <V_{DD}< 3.6 V	-	8	18	-
$t_{oh(TDO)}$	TDO output hold time	-	7	-	-	-

Table 123. Dynamics SWD characteristics

Symbol	Parameter	Conditions	Min	Typ	Max	Unit
F_{pp}	SWCLK clock frequency	2.7V <V_{DD}< 3.6 V	-	-	71	MHz
$1/t_{c(SWCLK)}$		1.62 <V_{DD}< 3.6 V	-	-	52.5	
$ti_{su(SWDIO)}$	SWDIO input setup time	-	2.5	-	-	-
$ti_{h(SWDIO)}$	SWDIO input hold time	-	1	-	-	-
$t_{ov(SWDIO)}$	SWDIO output valid time	2.7V <V_{DD}< 3.6 V	-	8.5	14	-
		1.62 <V_{DD}< 3.6 V	-	8.5	19	-
$t_{oh(SWDIO)}$	SWDIO output hold time	-	8	-	-	-

Figure 69. JTAG timing diagram

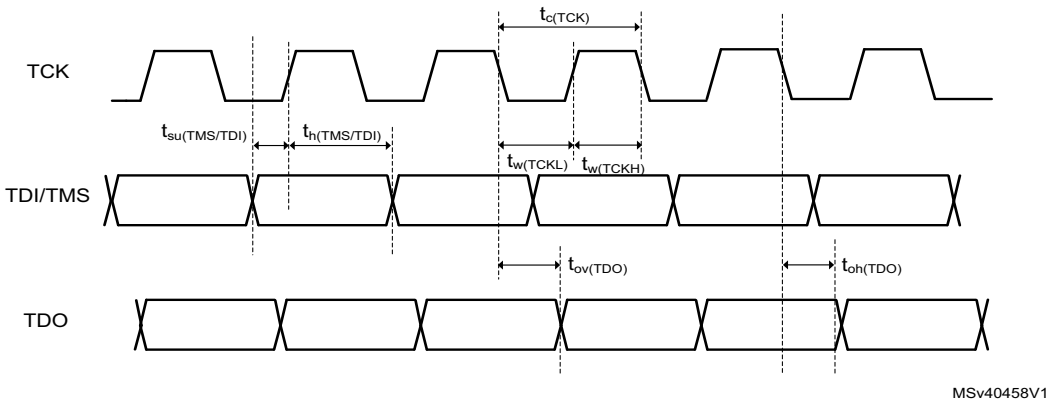

Figure 70. SWD timing diagram

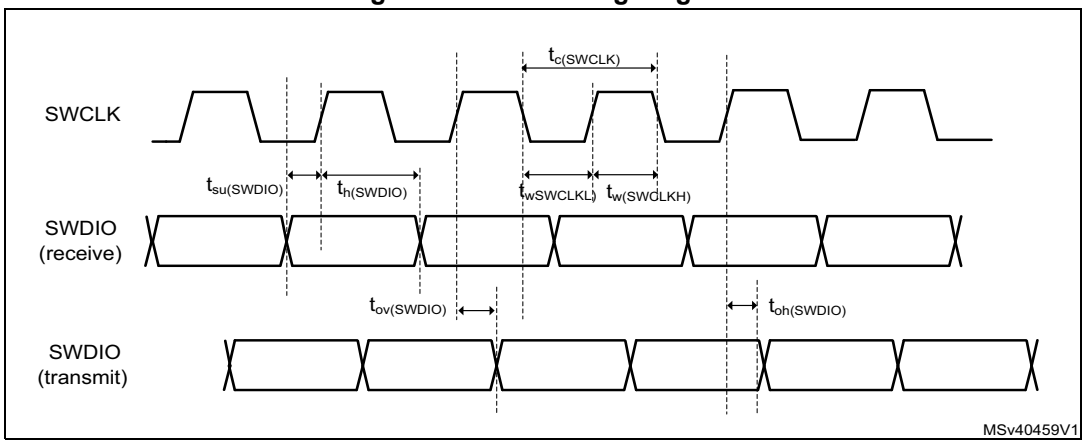

7 Package information

In order to meet environmental requirements, ST offers these devices in different grades of ECOPACK packages, depending on their level of environmental compliance. ECOPACK specifications, grade definitions and product status *are available at www.st.com.* ECOPACK is an ST trademark.

7.1 Device marking

Refer to technical note “Reference device marking schematics for STM32 microcontrollers and microprocessors” (TN1433) available on *www.st.com*, for the location of pin 1 / ball A1 as well as the location and orientation of the marking areas versus pin 1 / ball A1.

Parts marked as “ES”, “E” or accompanied by an engineering sample notification letter, are not yet qualified and therefore not approved for use in production. ST is not responsible for any consequences resulting from such use. In no event will ST be liable for the customer using any of these engineering samples in production. ST’s Quality department must be contacted prior to any decision to use these engineering samples to run a qualification activity.

A WLCSP simplified marking example (if any) is provided in the corresponding package information subsection.

7.2 LQFP100 package information (1L)

This LQFP is 100 lead, 14 x 14 mm low-profile quad flat package.

Note: See list of notes in the notes section.

Figure 71. LQFP100 - Outline(15)

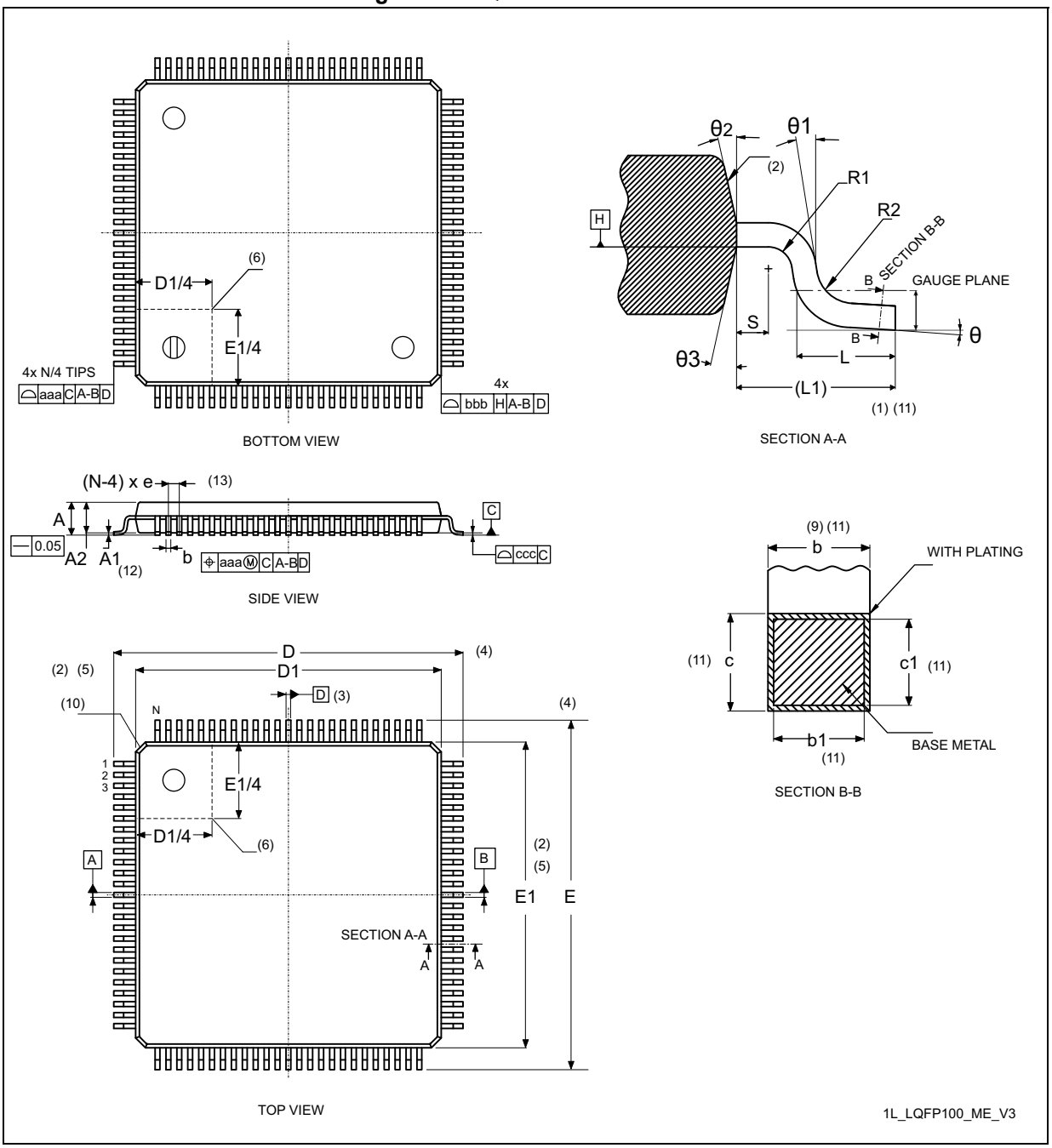

Table 124. LQFP100 - Mechanical data

Symbol	millimeters			inches(14)		
	Min	Typ	Max	Min	Typ	Max
A	-	1.50	1.60	-	0.0590	0.0630
A1(12)	0.05	-	0.15	0.0019	-	0.0059
A2	1.35	1.40	1.45	0.0531	0.0551	0.0570

Table 124. LQFP100 - Mechanical data (continued)

Symbol	millimeters			inches[14]		
	Min	Typ	Max	Min	Typ	Max
b[9][11]	0.17	0.22	0.27	0.0067	0.0087	0.0106
b1[11]	0.17	0.20	0.23	0.0067	0.0079	0.0090
c[11]	0.09	-	0.20	0.0035	-	0.0079
c1[11]	0.09	-	0.16	0.0035	-	0.0063
D[4]	16.00 BSC			0.6299 BSC		
D1[2][5]	14.00 BSC			0.5512 BSC		
E[4]	16.00 BSC			0.6299 BSC		
E1[2][5]	14.00 BSC			0.5512 BSC		
e	0.50 BSC			0.0197 BSC		
L	0.45	0.60	0.75	0.177	0.0236	0.0295
L1[1][11]	1.00			-	0.0394	-
N[13]	100					
θ	0°	3.5°	7°	0°	3.5°	7°
θ1	0°	-	-	0°	-	-
θ2	10°	12°	14°	10°	12°	14°
θ3	10°	12°	14°	10°	12°	14°
R1	0.08	-	-	0.0031	-	-
R2	0.08	-	0.20	0.0031	-	0.0079
S	0.20	-	-	0.0079	-	-
aaa[1]	0.20			0.0079		
bbb[1]	0.20			0.0079		
ccc[1]	0.08			0.0031		
ddd[1]	0.08			0.0031		

Notes:

1. Dimensioning and tolerancing schemes conform to ASME Y14.5M-1994.
2. The Top package body size may be smaller than the bottom package size by as much as 0.15 mm.
3. Datums A-B and D to be determined at datum plane H.
4. To be determined at seating datum plane C.
5. Dimensions D1 and E1 do not include mold flash or protrusions. Allowable mold flash or protrusions is “0.25 mm” per side. D1 and E1 are Maximum plastic body size dimensions including mold mismatch.
6. Details of pin 1 identifier are optional but must be located within the zone indicated.
7. All Dimensions are in millimeters.
8. No intrusion allowed inwards the leads.
9. Dimension “b” does not include dambar protrusion. Allowable dambar protrusion shall not cause the lead width to exceed the maximum “b” dimension by more than 0.08 mm. Dambar cannot be located on the lower radius or the foot. Minimum space between protrusion and an adjacent lead is 0.07 mm for 0.4 mm and 0.5 mm pitch packages.
10. Exact shape of each corner is optional.
11. These dimensions apply to the flat section of the lead between 0.10 mm and 0.25 mm from the lead tip.
12. A1 is defined as the distance from the seating plane to the lowest point on the package body.
13. “N” is the number of terminal positions for the specified body size.
14. Values in inches are converted from mm and rounded to 4 decimal digits.
15. Drawing is not to scale.

Figure 72. LQFP100 - Footprint example

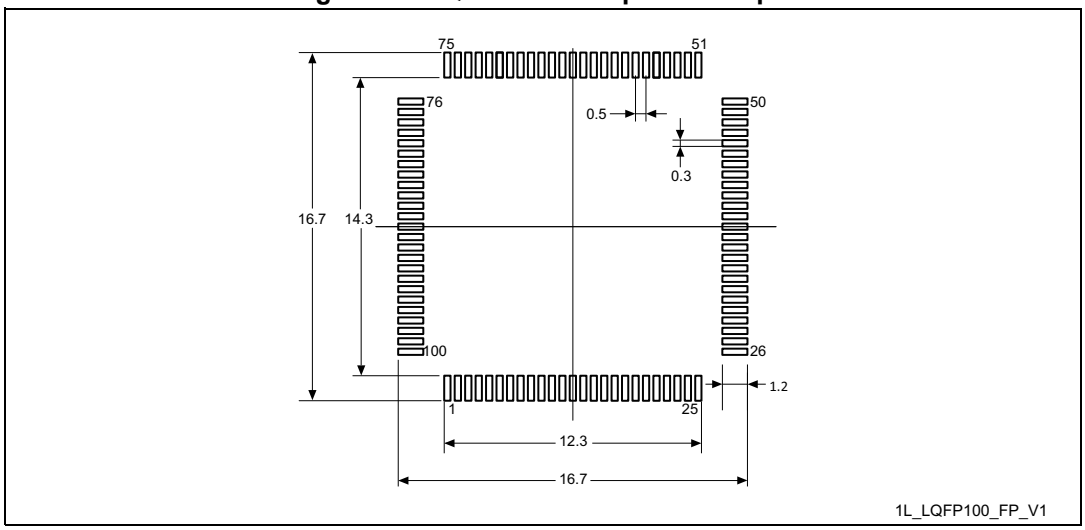

1. Dimensions are expressed in millimeters.

7.3 TFBGA100 package information (A08Q)

This TFBGA is 100 - ball, 8X8 mm, 0.8 mm pitch fine pitch ball grid array package.

Note: See list of notes in the notes section.

Figure 73. TFBGA100 - Outline(13)

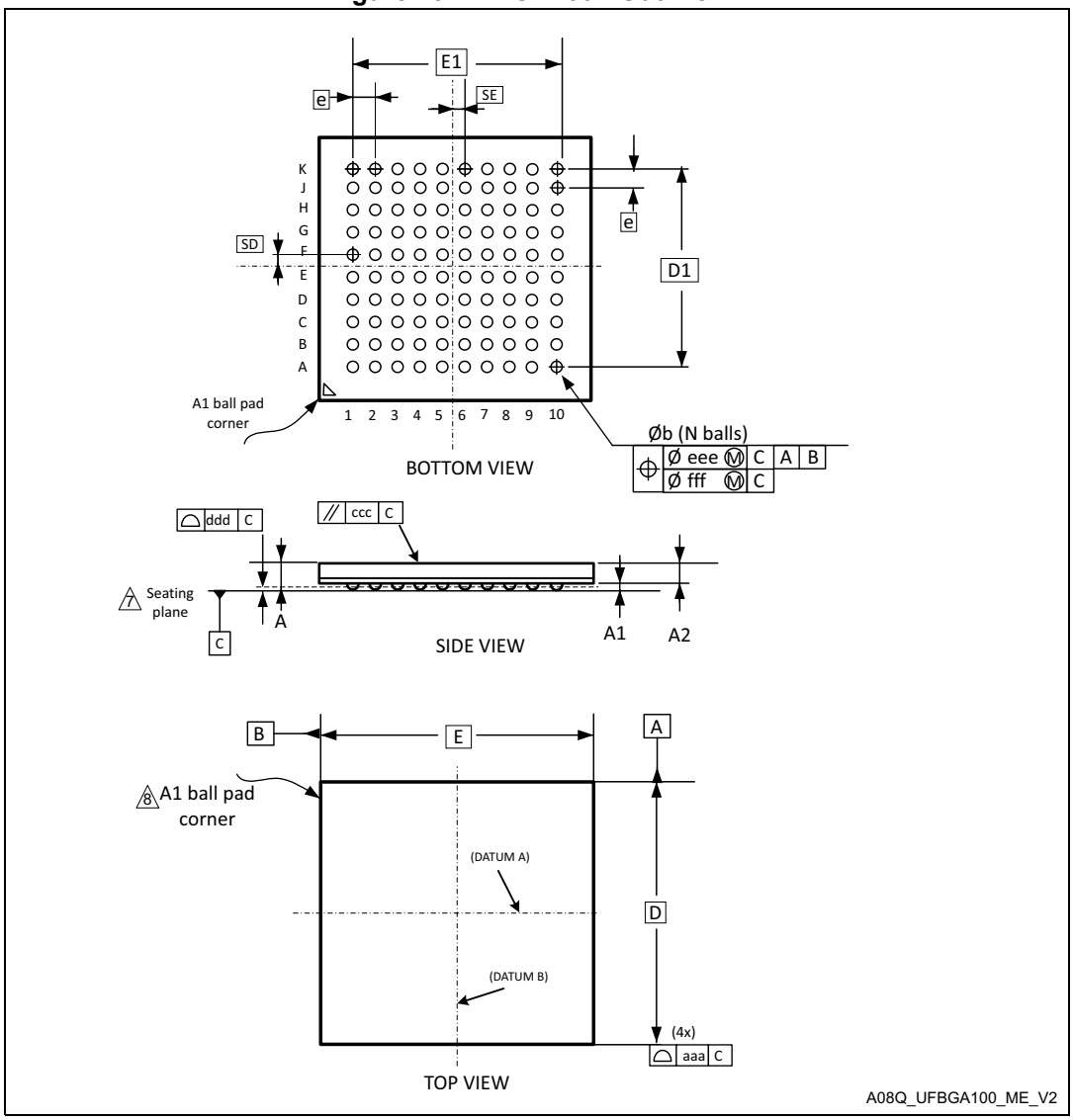

Table 125. TFBGA100 - Mechanical data

Symbol	millimeters[1]			inches[12]		
	Min	Typ	Max	Min	Typ	Max
A[2][3]	-	-	1.20	-	-	0.0472
A1[4]	0.15	-	-	0.0059	-	-
A2	-	0.74	-	-	0.0291	-
b[5]	0.35	0.40	0.45	0.0138	0.0157	0.0177
D	8.00 BSC[6]			0.3150 BSC		
D1	7.20 BSC			0.2835 BSC		
E	8.00 BSC			0.3150 BSC		
E1	7.20 BSC			0.2835 BSC		
e[9]	0.80 BSC			0.0315 BSC		
N[11]	100					
SD[12]	0.40 BSC			0.0157 BSC		
SE[12]	0.40 BSC			0.0157 BSC		
aaa	0.15			0.0059		
ccc	0.20			0.0079		
ddd	0.10			0.0039		
eee	0.15			0.0059		
fff	0.08			0.0031		

Notes:

1. Dimensioning and tolerancing schemes conform to ASME Y14.5M-2018.
2. TFBGA stands for thin profile fine pitch ball grid array: 1.00 mm < A ≤ 1.20 mm / fine pitch e < 1.00 mm.
3. The profile height, A, is the distance from the seating plane to the highest point on the package. It is measured perpendicular to the seating plane.
4. A1 is defined as the distance from the seating plane to the lowest point on the package body.
5. Dimension b is measured at the maximum diameter of the terminal (ball) in a plane parallel to primary datum C.
6. BSC stands for BASIC dimensions. It corresponds to the nominal value and has no tolerance. For tolerances refer to form and position table. On the drawing these dimensions are framed.
7. Primary datum C is defined by the plane established by the contact points of three or more solder balls that support the device when it is placed on top of a planar surface.
8. The terminal (ball) A1 corner must be identified on the top surface of the package by using a corner chamfer, ink or metalized markings, or other feature of package body or

integral heat slug. A distinguish feature is allowable on the bottom surface of the package to identify the terminal A1 corner. Exact shape of each corner is optional.

9. e represents the solder ball grid pitch.
10. N represents the total number of balls on the BGA.
11. Basic dimensions SD and SE are defined with respect to datums A and B. It defines the position of the centre ball(s) in the outer row or column of a fully populated matrix.
12. Values in inches are converted from mm and rounded to 4 decimal digits.
13. Drawing is not to scale.

Figure 74. TFBGA100 - Footprint example

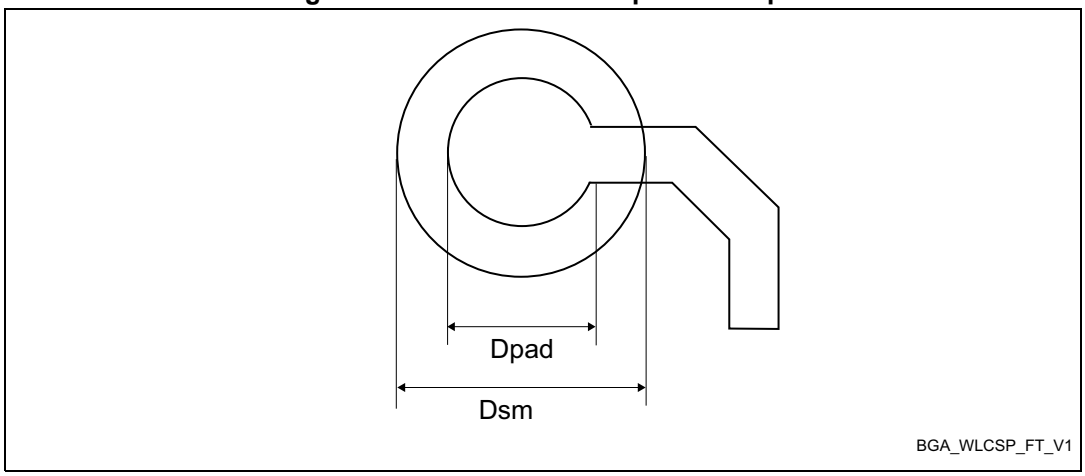

Table 126. TFBGA100 - Example of PCB design rules (0.8 mm pitch BGA)

Dimension	Values
Pitch	0.8
Dpad	0.400 mm
Dsm	0.470 mm typ. (depends on the soldermask registration tolerance)
Stencil opening	0.400 mm
Stencil thickness	Between 0.100 mm and 0.125 mm
Pad trace width	0.120 mm

7.4 LQFP144 package information (1A)

This LQFP is a 144-pin, 20 x 20 mm low-profile quad flat package.

Note: See list of notes in the notes section.

Figure 75. LQFP144 - Outline(15)

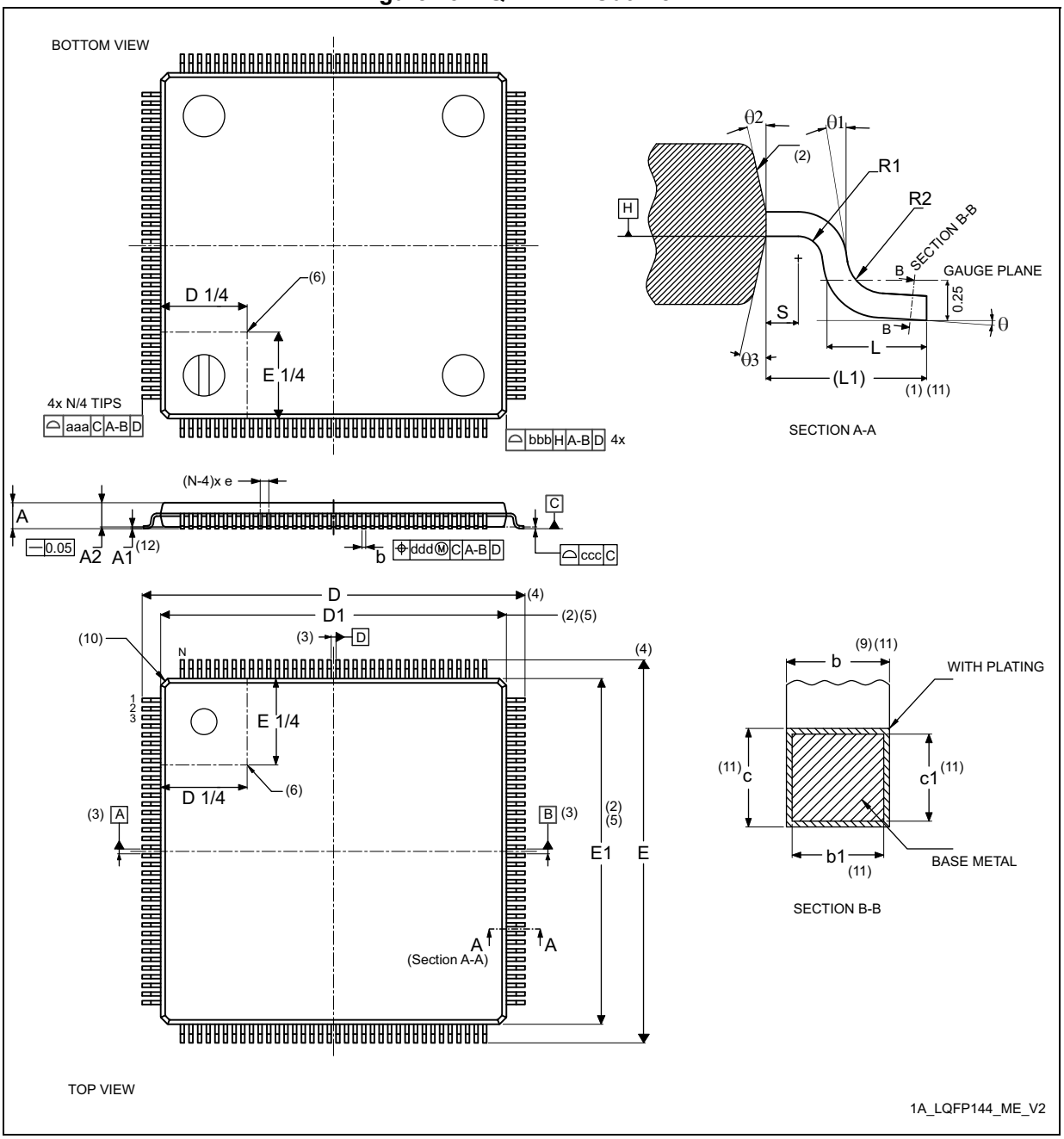

Table 127. LQFP144 - Mechanical data

Symbol	millimeters			inches[14]		
	Min	Typ	Max	Min	Typ	Max
A	-	-	1.60	-	-	0.0630
A1[12]	0.05	-	0.15	0.0020	-	0.0059
A2	1.35	1.40	1.45	0.0531	0.0551	0.0571
b[9][11]	0.17	0.22	0.27	0.0067	0.0087	0.0106
b1[11]	0.17	0.20	0.23	0.0067	0.0079	0.0090
c[11]	0.09	-	0.20	0.0035	-	0.0079
c1[11]	0.09	-	0.16	0.0035	-	0.0063
D[4]	22.00 BSC			0.8661 BSC		
D1[2][5]	20.00 BSC			0.7874 BSC		
E[4]	22.00 BSC			0.8661 BSC		
E1[2][5]	20.00 BSC			0.7874 BSC		
e	0.50 BSC			0.0197 BSC		
L	0.45	0.60	0.75	0.0177	0.0236	0.0295
L1	1.00 REF			0.0394 REF		
N[13]	144					
θ	0°	3.5°	7°	0°	3.5°	7°
θ1	0°	-	-	0°	-	-
θ2	10°	12°	14°	10°	12°	14°
θ3	10°	12°	14°	10°	12°	14°
R1	0.08	-	-	0.0031	-	-
R2	0.08	-	0.20	0.0031	-	0.0079
S	0.20	-	-	0.0079	-	-
aaa	0.20			0.0079		
bbb	0.20			0.0079		
ccc	0.08			0.0031		
ddd	0.08			0.0031		

Notes:

1. Dimensioning and tolerancing schemes conform to ASME Y14.5M-1994.
2. The Top package body size may be smaller than the bottom package size by as much as 0.15 mm.
3. Datums A-B and D to be determined at datum plane H.
4. To be determined at seating datum plane C.
5. Dimensions D1 and E1 do not include mold flash or protrusions. Allowable mold flash or protrusions is “0.25 mm” per side. D1 and E1 are Maximum plastic body size dimensions including mold mismatch.
6. Details of pin 1 identifier are optional but must be located within the zone indicated.
7. All Dimensions are in millimeters.
8. No intrusion allowed inwards the leads.
9. Dimension “b” does not include dambar protrusion. Allowable dambar protrusion shall not cause the lead width to exceed the maximum “b” dimension by more than 0.08 mm. Dambar cannot be located on the lower radius or the foot. Minimum space between protrusion and an adjacent lead is 0.07 mm for 0.4 mm and 0.5 mm pitch packages.
10. Exact shape of each corner is optional.
11. These dimensions apply to the flat section of the lead between 0.10 mm and 0.25 mm from the lead tip.
12. A1 is defined as the distance from the seating plane to the lowest point on the package body.
13. “N” is the number of terminal positions for the specified body size.
14. Values in inches are converted from mm and rounded to 4 decimal digits.
15. Drawing is not to scale.

Figure 76. LQFP144 - Footprint example

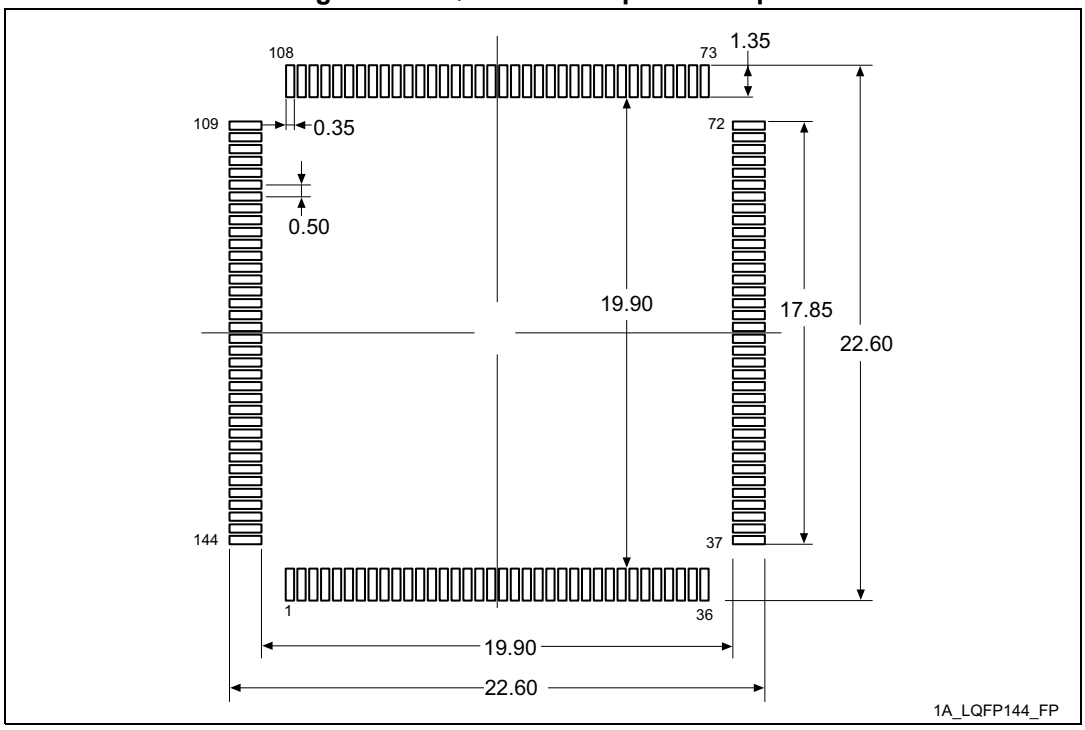

1. Dimensions are expressed in millimeters.

7.5 UFBGA144 package information

Figure 77. UFBGA - 144 balls, 7 x 7 mm, 0.50 mm pitch, ultra fine pitch ball grid array package outline

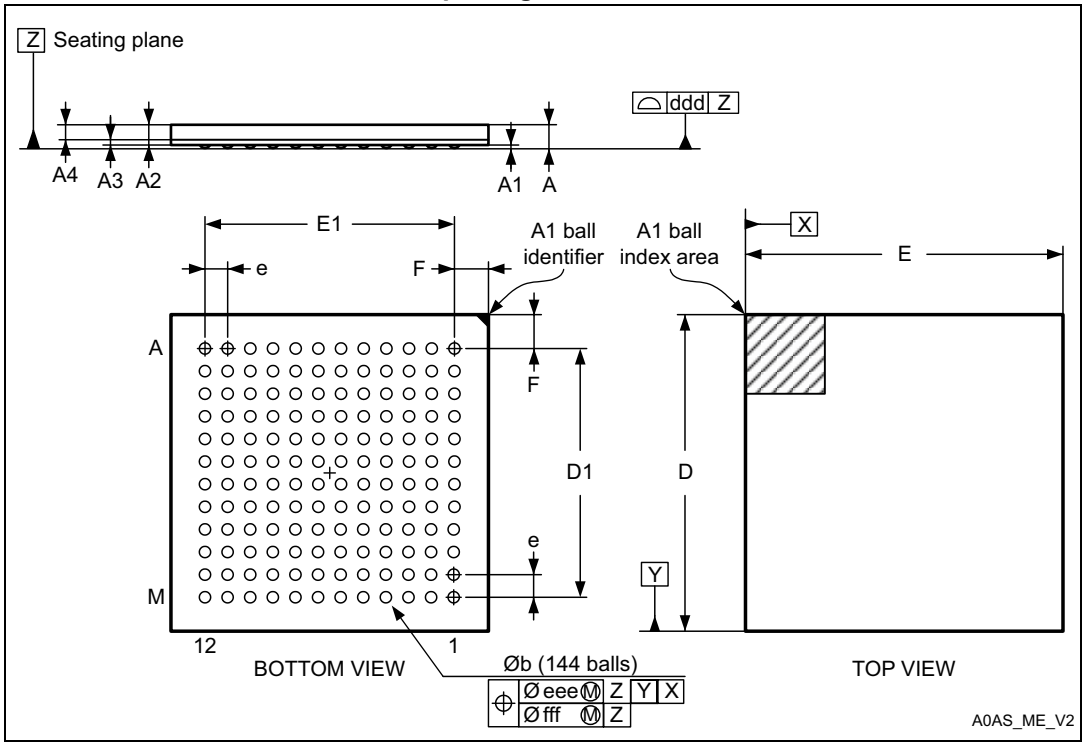

1. Drawing is not to scale.

Table 128. UFBGA - 144 balls, 7 x 7 mm, 0.50 mm pitch, ultra fine pitch ball grid array package mechanical data

Symbol	millimeters			inches[1]		
	Min.	Typ.	Max.	Min.	Typ.	Max.
A	0.460	0.530	0.600	0.0181	0.0209	0.0236
A1	0.050	0.080	0.110	0.0020	0.0031	0.0043
A2	0.400	0.450	0.500	0.0157	0.0177	0.0197
A3	-	0.130	-	-	0.0051	-
A4	0.270	0.320	0.370	0.0106	0.0126	0.0146
b	0.230	0.280	0.320	0.0091	0.0110	0.0126
D	6.950	7.000	7.050	0.2736	0.2756	0.2776
D1	5.450	5.500	5.550	0.2146	0.2165	0.2185
E	6.950	7.000	7.050	0.2736	0.2756	0.2776
E1	5.450	5.500	5.550	0.2146	0.2165	0.2185
e	-	0.500	-	-	0.0197	-
F	0.700	0.750	0.800	0.0276	0.0295	0.0315

Table 128. UFBGA - 144 balls, 7 x 7 mm, 0.50 mm pitch, ultra fine pitch ball grid array package mechanical data (continued)

Symbol	millimeters			inches[1]		
	Min.	Typ.	Max.	Min.	Typ.	Max.
ddd	-	-	0.100	-	-	0.0039
eee	-	-	0.150	-	-	0.0059
fff	-	-	0.050	-	-	0.0020

1. Values in inches are converted from mm and rounded to 4 decimal digits.

Figure 78. UFBGA - 144 balls, 7 x 7 mm, 0.50 mm pitch, ultra fine pitch ball grid array package recommended footprint

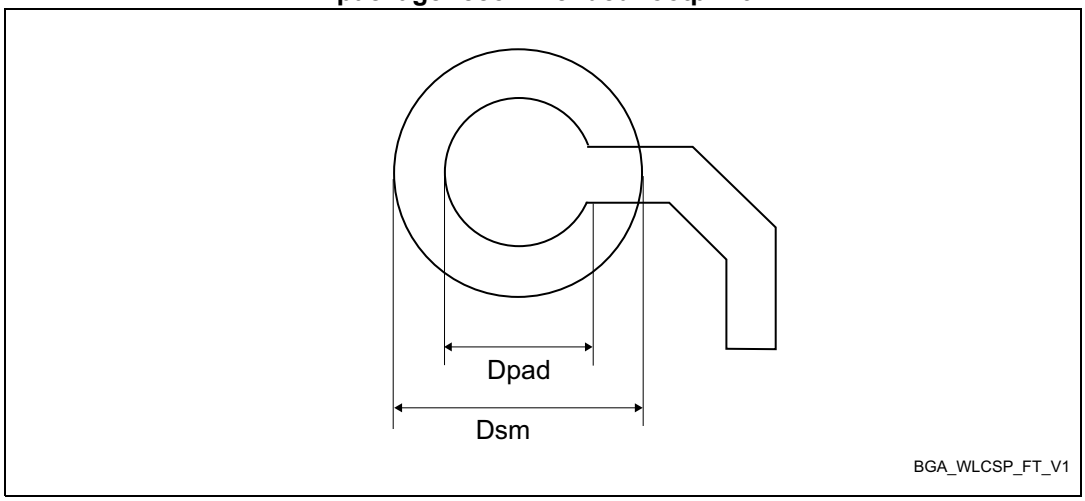

Table 129. UFBGA144 recommended PCB design rules (0.50 mm pitch BGA)

Dimension	Recommended values
Pitch	0.50 mm
Dpad	0.280 mm
Dsm	0.370 mm typ. (depends on the soldermask registration tolerance)
Stencil opening	0.280 mm
Stencil thickness	Between 0.100 mm and 0.125 mm
Pad trace width	0.120 mm

7.6 UFBGA169 package information (A0YV)

This UFBGA is a 169-ball, 7 x 7 mm, 0.50 mm pitch, ultra fine pitch ball grid array package.

Figure 79. UFBGA169 - Outline

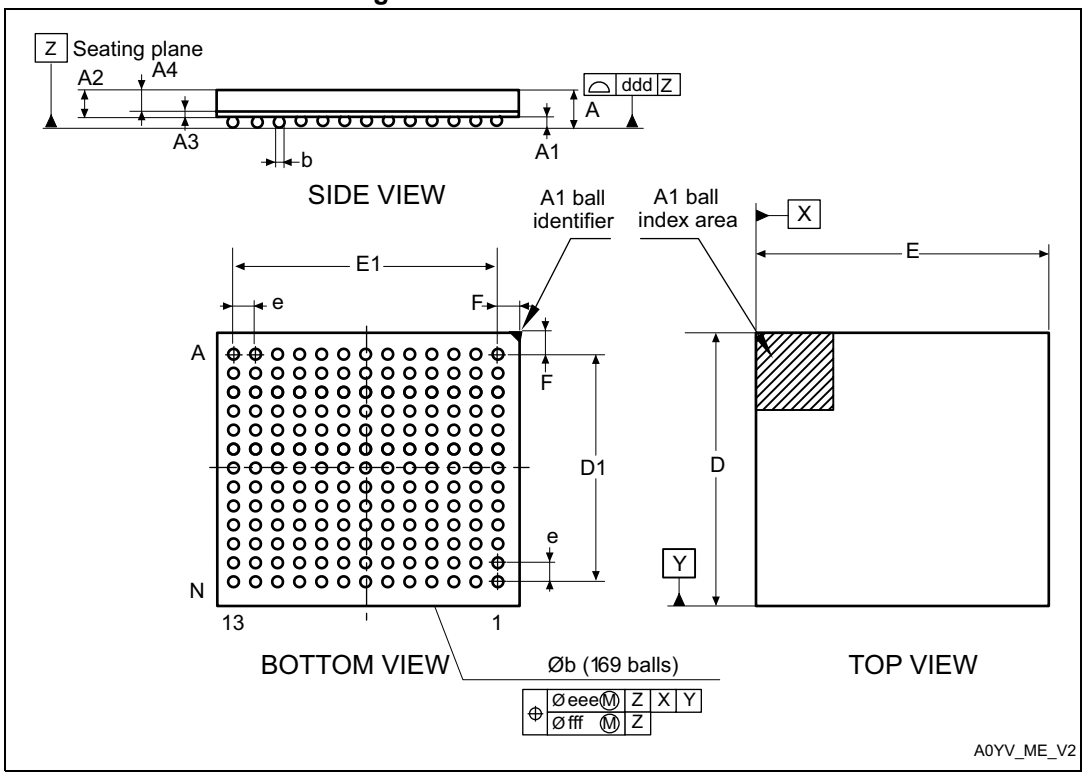

1. Drawing is not to scale.

Table 130. UFBGA169 - Mechanical data

Symbol	millimeters			inches[1]		
	Min.	Typ.	Max.	Min.	Typ.	Max.
A	0.460	0.530	0.600	0.0181	0.0209	0.0236
A1	0.050	0.080	0.110	0.0020	0.0031	0.0043
A2	0.400	0.450	0.500	0.0157	0.0177	0.0197
A3	-	0.130	-	-	0.0051	-
A4	0.270	0.320	0.370	0.0106	0.0126	0.0146
b	0.230	0.280	0.330	0.0091	0.0110	0.0130
D	6.950	7.000	7.050	0.2736	0.2756	0.2776
D1	5.950	6.000	6.050	0.2343	0.2362	0.2382
E	6.950	7.000	7.050	0.2736	0.2756	0.2776
E1	5.950	6.000	6.050	0.2343	0.2362	0.2382
e	-	0.500	-	-	0.0197	-
F	0.450	0.500	0.550	0.0177	0.0197	0.0217
ddd	-	-	0.100	-	-	0.0039

Table 130. UFBGA169 - Mechanical data (continued)

Symbol	millimeters			inches[1]		
	Min.	Typ.	Max.	Min.	Typ.	Max.
eee	-	-	0.150	-	-	0.0059
fff	-	-	0.050	-	-	0.0020

1. Values in inches are converted from mm and rounded to 4 decimal digits.

Figure 80. UFBGA169 - Footprint example

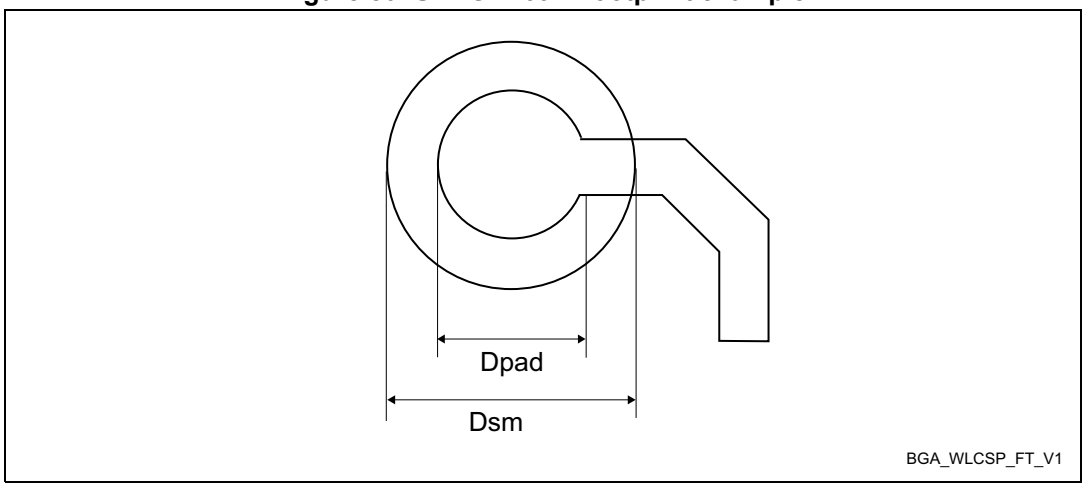

Table 131. UFBGA169 - Example of PCB design rules (0.5 mm pitch BGA)

Dimension	Values
Pitch	0.5 mm
Dpad	0.27 mm
Dsm	0.35 mm typ. (depends on the soldermask registration tolerance)
Solder paste	0.27 mm aperture diameter.

Note: Non-solder mask defined (NSMD) pads are recommended.

Note: 4 to 6 mils solder paste screen printing process.

7.7 LQFP176 package information (1T)

This LQFP is a 176-pin, 24 x 24 mm, 0.5 mm pitch, low profile quad flat package.

Note: See list of notes in the notes section.

Figure 81. LQFP176 - Outline(15)

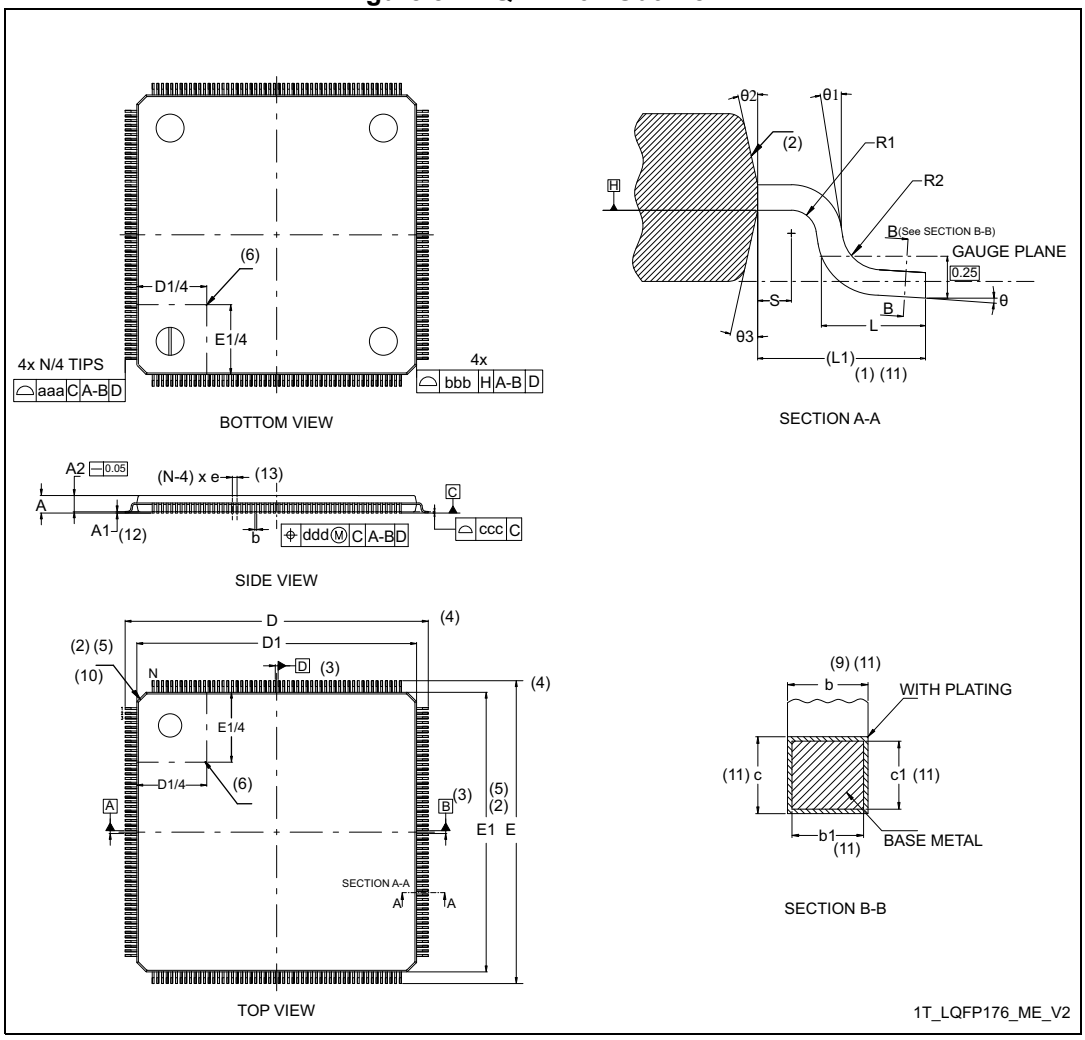

Table 132. LQFP176 - Mechanical data

Symbol	millimeters			inches[14]		
	Min	Typ	Max	Min	Typ	Max
A	-	-	1.600	-	-	0.0630
A1[12]	0.050	-	0.150	0.0020	-	0.0059
A2	1.350	1.400	1.450	0.0531	0.0551	0.0571
b[9][11]	0.170	0.220	0.270	0.0067	0.0087	0.0106
b1[11]	0.170	0.200	0.230	0.0067	0.0079	0.0091
c[11]	0.090	-	0.200	0.0035	-	0.0079
c1[11]	0.090	-	0.160	0.0035	-	0.063
D[4]	26.000			1.0236		
D1[2][5]	24.000			0.9449		
E[4]	26.000			0.0197		
E1[2][5]	24.000			0.9449		
e	0.500			0.1970		
L	0.450	0.600	0.750	0.0177	0.0236	0.0295
L1[1][11]	1			0.0394 REF		
N[13]	176					
θ	0°	3.5°	7°	0°	3.5°	7°
θ1	0°	-	-	0°	-	-
θ2	10°	12°	14°	10°	12°	14°
θ3	10°	12°	14°	10°	12°	14°
R1	0.080	-	-	0.0031	-	-
R2	0.080	-	0.200	0.0031	-	0.0079
S	0.200	-	-	0.0079	-	-
aaa[1]	0.200			0.0079		
bbb[1]	0.200			0.0079		
ccc[1]	0.080			0.0031		
ddd[1]	0.080			0.0031		

Notes:

1. Dimensioning and tolerancing schemes conform to ASME Y14.5M-1994.
2. The Top package body size may be smaller than the bottom package size by as much as 0.15 mm.
3. Datums A-B and D to be determined at datum plane H.
4. To be determined at seating datum plane C.
5. Dimensions D1 and E1 do not include mold flash or protrusions. Allowable mold flash or protrusions is “0.25 mm” per side. D1 and E1 are Maximum plastic body size dimensions including mold mismatch.
6. Details of pin 1 identifier are optional but must be located within the zone indicated.
7. All Dimensions are in millimeters.
8. No intrusion allowed inwards the leads.
9. Dimension “b” does not include dambar protrusion. Allowable dambar protrusion shall not cause the lead width to exceed the maximum “b” dimension by more than 0.08 mm. Dambar cannot be located on the lower radius or the foot. Minimum space between protrusion and an adjacent lead is 0.07 mm for 0.4 mm and 0.5 mm pitch packages.
10. Exact shape of each corner is optional.
11. These dimensions apply to the flat section of the lead between 0.10 mm and 0.25 mm from the lead tip.
12. A1 is defined as the distance from the seating plane to the lowest point on the package body.
13. “N” is the number of terminal positions for the specified body size.
14. Values in inches are converted from mm and rounded to 4 decimal digits.
15. Drawing is not to scale.

Figure 82. LQFP176 - Footprint example

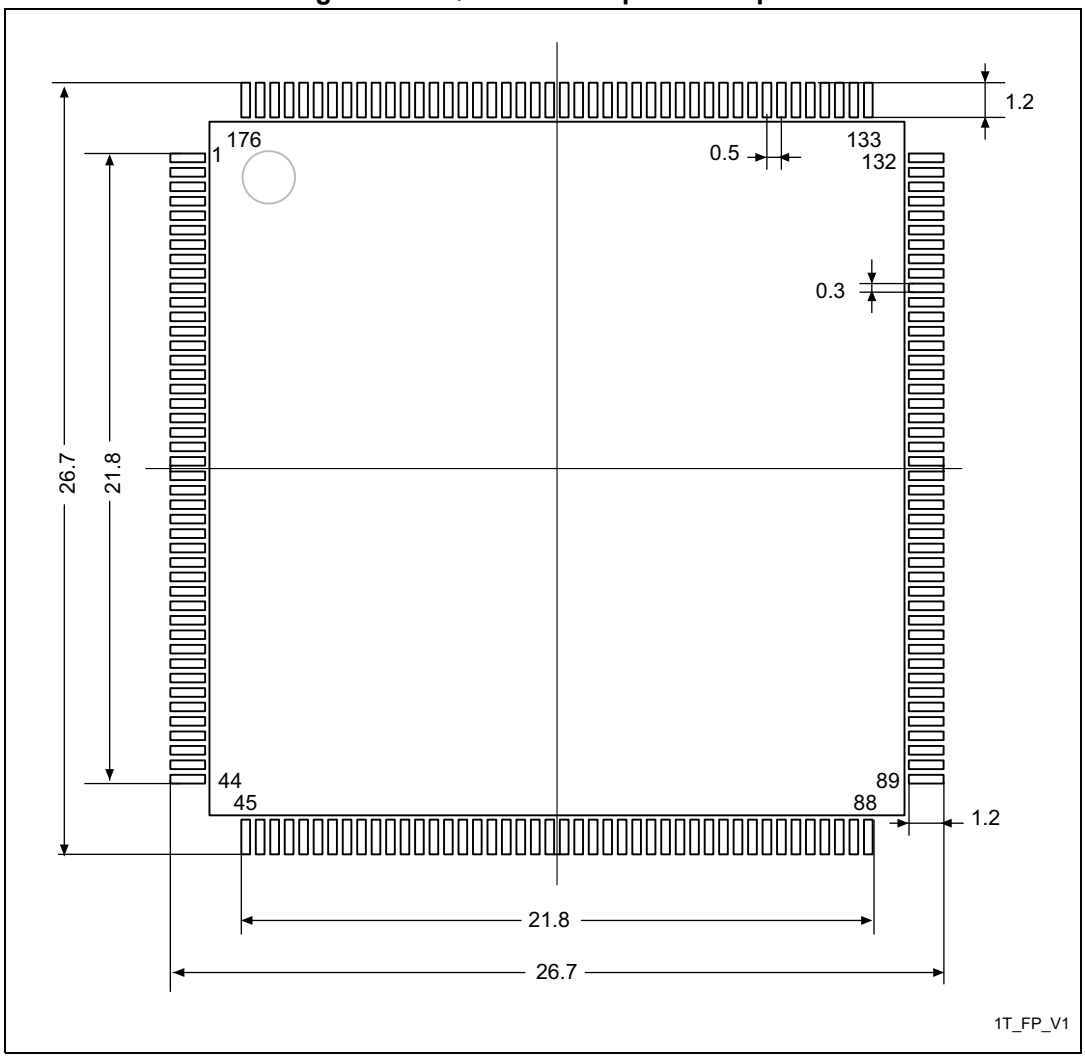

1. Dimensions are expressed in millimeters.

7.8 UFBGA(176+25) package information (A0E7)

This UFBGA is a 176+25-ball, 10 x 10 mm, 0.65 mm pitch, ultra fine pitch ball grid array package

Figure 83. UFBGA(176+25) - Outline

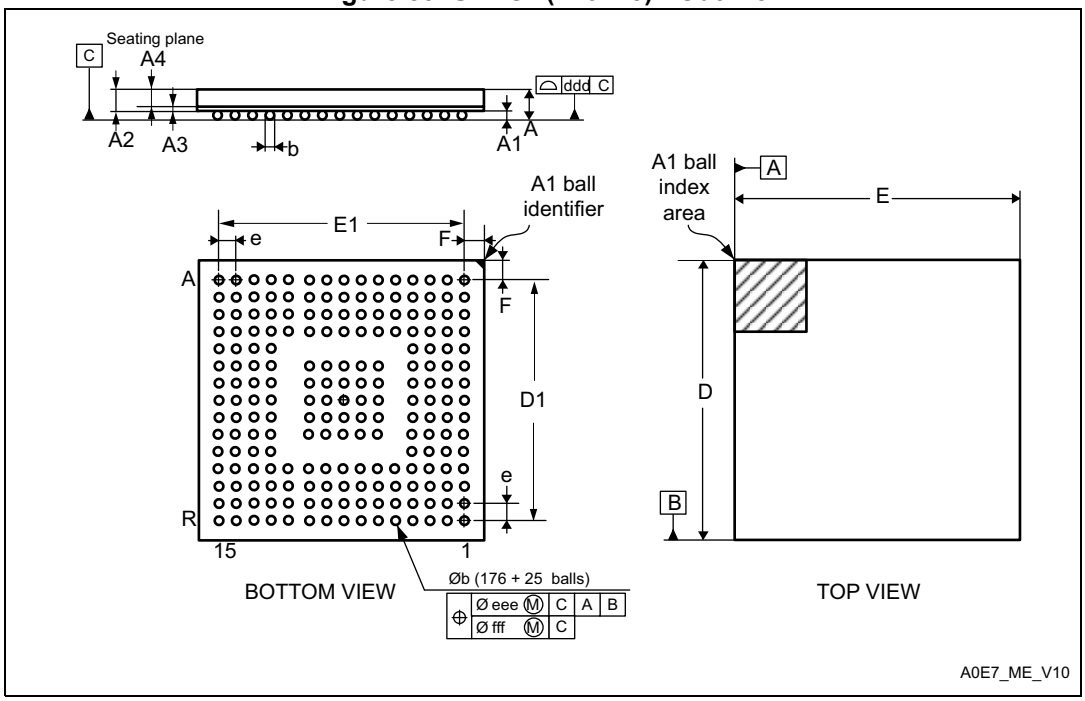

1. Drawing is not to scale.

Table 133. UFBGA(176+25) - Mechanical data

Symbol	millimeters			inches(1)		
	Min.	Typ.	Max.	Min.	Typ.	Max.
A	-	-	0.600	-	-	0.0236
A1	0.050	0.080	0.110	0.0020	0.0031	0.0043
A2	-	0.450	-	-	0.0177	-
A3	-	0.130	-	-	0.0051	-
A4	-	0.320	-	-	0.0126	-
b	0.240	0.290	0.340	0.0094	0.0114	0.0134
D	9.850	10.000	10.150	0.3878	0.3937	0.3996
D1	-	9.100	-	-	0.3583	-
E	9.850	10.000	10.150	0.3878	0.3937	0.3996
E1	-	9.100	-	-	0.3583	-
e	-	0.650	-	-	0.0256	-
F	-	0.450	-	-	0.0177	-
ddd	-	-	0.080	-	-	0.0031

Table 133. UFBGA(176+25) - Mechanical data (continued)

Symbol	millimeters			inches[1]		
	Min.	Typ.	Max.	Min.	Typ.	Max.
eee	-	-	0.150	-	-	0.0059
fff	-	-	0.050	-	-	0.0020

1. Values in inches are converted from mm and rounded to 4 decimal digits.

Figure 84. UFBGA(176+25) - Footprint example

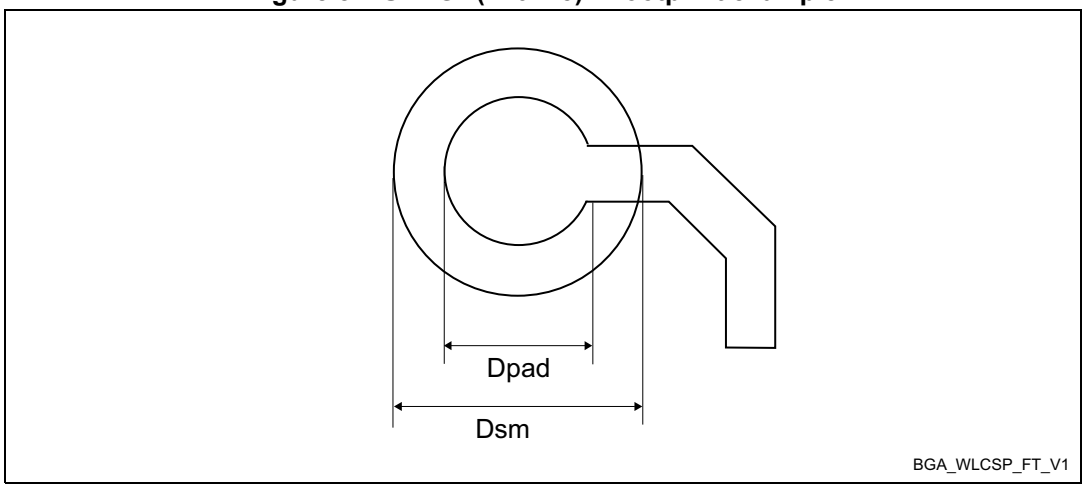

Table 134. UFBGA(176+25) - Example of PCB design rules (0.65 mm pitch BGA)

Dimension	Values
Pitch	0.65 mm
Dpad	0.300 mm
Dsm	0.400 mm typ. (depends on the soldermask registration tolerance)
Stencil opening	0.300 mm
Stencil thickness	Between 0.100 mm and 0.125 mm
Pad trace width	0.100 mm

7.9 Thermal characteristics

The maximum chip-junction temperature, T_{Jmax}, in degrees Celsius, may be calculated using the following equation:

$T_{Jmax} = T_A$ max + (P_D max × Θ_{JA})

Where:

- T_A max is the maximum ambient temperature in °C,
- Θ_{JA} is the package junction-to-ambient thermal resistance, in °C/W,
- P_D max is the sum of P_{INT} max and $P_{I/O}$ max (P_D max = P_{INT} max + $P_{I/O}$max),
- P_{INT} max is the product of I_{DD} and V_{DD}, expressed in Watts. This is the maximum chip internal power.

$P_{I/O}$ max represents the maximum power dissipation on output pins where:

$P_{I/O}$ max = Σ (V_{OL} × I_{OL}) + Σ((V_{DD} – V_{OH}) × I_{OH}),

taking into account the actual V_{OL} / I_{OL} and V_{OH} / I_{OH} of the I/Os at low and high level in the application.

Table 135. Thermal characteristics

Symbol	Definition	Parameter	Value	Unit
Θ_{JA}	Thermal resistance junction-ambient	**Thermal resistance junction-ambient** LQFP100 - 14 x 14 mm /0.5 mm pitch	43.8	°C/W
		Thermal resistance junction-ambient TFBGA100 - 8 x 8 mm /0.8 mm pitch	43.2	
		Thermal resistance junction-ambient LQFP144 - 20 x 20 mm /0.5 mm pitch	44.8	
		Thermal resistance junction-ambient UFBGA144 - 7 x 7 mm /0.5 mm pitch	36	
		Thermal resistance junction-ambient UFBGA169 - 7 x 7 mm / 0.5 mm pitch	38	
		Thermal resistance junction-ambient LQFP176 - 24 x 24 mm / 0.5 mm pitch	48.3	
		Thermal resistance junction-ambient UFBGA176+25 - 10 x 10 mm / 0.65 mm pitch	38	

Table 135. Thermal characteristics (continued)

Symbol	Definition	Parameter	Value	Unit
Θ_{JB}	Thermal resistance junction-board	**Thermal resistance junction-ambient** LQFP100 - 14 x 14 mm /0.5 mm pitch	19.8	°C/W
		Thermal resistance junction-ambient TFBGA100 - 8 x 8 mm /0.8 mm pitch	24.8	
		Thermal resistance junction-ambient LQFP144 - 20 x 20 mm /0.5 mm pitch	24.4	
		Thermal resistance junction-ambient UFBGA144 - 7 x 7 mm /0.5 mm pitch	21.1	
		Thermal resistance junction-ambient UFBGA169 - 7 x 7 mm / 0.5 mm pitch	18	
		Thermal resistance junction-ambient LQFP176 - 24 x 24 mm / 0.5 mm pitch	29.1	
		Thermal resistance junction-ambient UFBGA176+25 - 10 x 10 mm / 0.65 mm pitch	20	
Θ_{JC}	Thermal resistance junction-case	**Thermal resistance junction-ambient** LQFP100 - 14 x 14 mm /0.5 mm pitch	7.3	°C/W
		Thermal resistance junction-ambient TFBGA100 - 8 x 8 mm /0.8 mm pitch	13.2	
		Thermal resistance junction-ambient LQFP144 - 20 x 20 mm /0.5 mm pitch	7.4	
		Thermal resistance junction-ambient UFBGA144 - 7 x 7 mm /0.5 mm pitch	8.7	
		Thermal resistance junction-ambient UFBGA169 - 7 x 7 mm / 0.5 mm pitch	11	
		Thermal resistance junction-ambient LQFP176 - 24 x 24 mm / 0.5 mm pitch	7.9	
		Thermal resistance junction-ambient UFBGA176+25 - 10 x 10 mm / 0.65 mm pitch	24	

7.9.1 Reference documents

- JESD51-2 Integrated Circuits Thermal Test Method Environment Conditions - Natural Convection (Still Air). Available from www.jedec.org.
- For information on thermal management, refer to application note “*Guidelines for thermal management on STM32 applications*” (AN5036) available from *www.st.com*.

8 Ordering information

Example: STM32 H 730 V B T 6 Q TR

Device family

STM32 = Arm-based 32-bit microcontroller

Product type

H = High performance

Device subfamily

730 = STM32H730

Pin count

V = 100 pins

Z = 144 pins

A = 169 pins

I = 176 pins/balls

Flash memory size

B= 128 Kbytes

Package

T = LQFP ECOPACK2

K = UFBGA pitch 0.65 mm ECOPACK2

I = UFBGA pitch 0.5 mm ECOPACK2

H = TFBGA ECOPACK2

Temperature range

6 = –40 to 85 °C

Option

Q = with SMPS

Blank = without SMPS

Packing

TR = tape and reel

No character = tray or tube

For a list of available options (speed, package, etc.) or for further information on any aspect of this device, please contact your nearest ST sales office.

9 Important security notice

The STMicroelectronics group of companies (ST) places a high value on product security, which is why the ST product(s) identified in this documentation may be certified by various security certification bodies and/or may implement our own security measures as set forth herein. However, no level of security certification and/or built-in security measures can guarantee that ST products are resistant to all forms of attacks. As such, it is the responsibility of each of ST's customers to determine if the level of security provided in an ST product meets the customer needs both in relation to the ST product alone, as well as when combined with other components and/or software for the customer end product or application. In particular, take note that:

- ST products may have been certified by one or more security certification bodies, such as Platform Security Architecture (www.psacertified.org) and/or Security Evaluation standard for IoT Platforms (www.trustcb.com). For details concerning whether the ST product(s) referenced herein have received security certification along with the level and current status of such certification, either visit the relevant certification standards website or go to the relevant product page on www.st.com for the most up to date information. As the status and/or level of security certification for an ST product can change from time to time, customers should re-check security certification status/level as needed. If an ST product is not shown to be certified under a particular security standard, customers should not assume it is certified.
- Certification bodies have the right to evaluate, grant and revoke security certification in relation to ST products. These certification bodies are therefore independently responsible for granting or revoking security certification for an ST product, and ST does not take any responsibility for mistakes, evaluations, assessments, testing, or other activity carried out by the certification body with respect to any ST product.
- Industry-based cryptographic algorithms (such as AES, DES, or MD5) and other open standard technologies which may be used in conjunction with an ST product are based on standards which were not developed by ST. ST does not take responsibility for any flaws in such cryptographic algorithms or open technologies or for any methods which have been or may be developed to bypass, decrypt or crack such algorithms or technologies.
- While robust security testing may be done, no level of certification can absolutely guarantee protections against all attacks, including, for example, against advanced attacks which have not been tested for, against new or unidentified forms of attack, or against any form of attack when using an ST product outside of its specification or intended use, or in conjunction with other components or software which are used by customer to create their end product or application. ST is not responsible for resistance against such attacks. As such, regardless of the incorporated security features and/or any information or support that may be provided by ST, each customer is solely responsible for determining if the level of attacks tested for meets their needs, both in relation to the ST product alone and when incorporated into a customer end product or application.
- All security features of ST products (inclusive of any hardware, software, documentation, and the like), including but not limited to any enhanced security features added by ST, are provided on an "AS IS" BASIS. AS SUCH, TO THE EXTENT PERMITTED BY APPLICABLE LAW, ST DISCLAIMS ALL WARRANTIES, EXPRESS OR IMPLIED, INCLUDING BUT NOT LIMITED TO THE IMPLIED WARRANTIES OF MERCHANTABILITY OR FITNESS FOR A PARTICULAR PURPOSE, unless the applicable written and signed contract terms specifically provide otherwise.

10 Revision history

Table 136. Document revision history

Date	Revision	Changes
10-Jul-2020	1	Initial release.
03-Sep-2020	2	Renamed *Section 3.31* into *True random number generator (RNG)*. Replaced V_{DDIOx} by V_{DD} in *Section 6: Electrical characteristics*. Updated I_{IO} in *Table 10: Current characteristics* and *Table 17: Inrush current and inrush electric charge characteristics for LDO and SMPS*. Removed *Table 13: Supply voltage and maximum temperature configuration*. Updated *Table 27: Typical current consumption in Autonomous mode*, *Table 30: Typical and maximum current consumption in Standby mode* and *Table 31: Typical and maximum current consumption in VBAT mode*. Added *Section 6.3.16: I/O current injection characteristics*. Removed reference to PI8 in *Table 55: Output voltage characteristics for all I/Os except PC13, PC14 and PC15* and *Table 56: Output voltage characteristics for PC13, PC14 and PC15*. Added *Section : Analog switch between ports Pxy_C and Pxy*. Added *Figure 82: LQFP176 - Footprint example* and *Table 80: UFBGA169 - Footprint example*.
07-Dec-2021	3	Added indication that patents apply to the devices in *Section : Features*. *Table 1: STM32H730xB features and peripheral counts*: – Changed number of general-purpose 32-bit timers to 4. – For LQFP100 and TFBGA100 packages, replaced 2 Octo-SPI/Quad-SPI interfaces by 1 and remove note – Changed number of SPI/I2S from 4/4 to 6/4 for UFBGA169. In *Section 3.8.1: Power supply scheme*, changed V_{DD} power supply requirements. *Section 3.8.3: Voltage regulator*: Scale0 is available even without LDO. *Section 3.37: Universal synchronous/asynchronous receiver transmitter (USART)*: changed USART communication speed to 17 Mbit/s. *Table 7: STM32H730xB pin and ball descriptions*: – for PA15(JTDI), replaced SPI3_NSS/I2S3_WS alternate function by SPI3_NSS(boot)/I2S3_WS. – Added *Note 1.*and *Note 2.*to the package pin/balls corresponding to Pxy and Pxy_C. Added V_{BAT} in *Table 12: General operating conditions*. Moved LSI clock from backup domain to VDD domain in *Figure 13: Power supply scheme*. Modified *Section 6.3.3: SMPS step-down converter* including *Figure 16: External components for SMPS step-down converter*. Updated *Table 18: Operating conditions at power-up/power-down* title and added t_{VCORE}.

Table 136. Document revision history

Date	Revision	Changes
07-Dec-2021	3 (continued)	*Section : On-chip peripheral current consumption*: updated measurement conditions and *Table 32: Peripheral current consumption in Run mode*. Updated *Table 34: High-speed external user clock characteristics*. Changed unit for PLL long-term jitter in *Table 42: PLL1 characteristics (wide VCO frequency range)*. Renamed $_{ILEAK}$ parameter into I_{lkg} in *Table 54: I/O static characteristics*. *Table 58: Output timing characteristics (HSLV ON)*: updated load capacitance condition for t_r/t_f and for speed = 10. Updated *Figure 38: OCTOSPI SDR read/write timing diagram*, *Figure 39: OCTOSPI DTR mode timing diagram*, *Figure 40: OCTOSPI Hyperbus clock timing diagram*, *Figure 41: OCTOSPI Hyperbus read timing diagram* and *Figure 42: OCTOSPI Hyperbus write timing diagram*. *Table 83: 16-bit ADC characteristics*: updated sampling rate for slow channels. Updated *Figure 43: ADC accuracy characteristics* and *Figure 44: Typical connection diagram when using the ADC with FT/TT pins featuring analog switch function* as well as notes below figure. Updated *Figure 45: Power supply and reference decoupling (V_{REF+} not connected to V_{DDA})*. Updated T_L max value in *Table 92: Temperature sensor characteristics*. Changed temperature condition to 130 °C for TS_CAL2 in *Table 93: Temperature sensor calibration values*. Updated *Figure 52: USART timing diagram in master mode* and *Figure 53: USART timing diagram in slave mode*. Updated *Figure 62: SD high-speed mode*, *Figure 63: SD default mode* and *Figure 64: SDMMC DDR mode*. Updated *Figure 68: Ethernet MII timing diagram*. Updated *Figure 71: LQFP100 - Outline(15)*, *Table 132: LQFP176 - Mechanical data*, *Figure 74: TFBGA100 - Footprint example*, *Figure 81: LQFP176 - Outline(15)* and *Table 132: LQFP176 - Mechanical data*.
17-Nov-2023	4	Updated document title. Updated *Figure 1: STM32H730xB block diagram*. In *Table 1: STM32H730xB features and peripheral counts*: changed the number of available Ethernet MII and SAI PDM interfaces. Updated description of USB regulator bypass in *Section 3.8.1: Power supply scheme*. Updated *Section 3.39: Serial peripheral interface (SPI)/inter- integrated sound interfaces (I2S)*. Updated *Section 3.40: Serial audio interfaces (SAI)*. Updated *Table 7: STM32H730xB pin and ball descriptions* (removed ADC3_INP16 additional function from PH5 pin). Added note to *Chapter 6.2*. Updated I_{IO} definition in *Table 10: Current characteristics*. Updated V_{IN} in *Table 12: General operating conditions* to cover the case of Pxy_C. In *Table 13: Supply voltage and maximum temperature configuration*, updated V_{DDLDO} minimum value for VOS0 power source and external bypass.

Table 136. Document revision history

Date	Revision	Changes
17-Nov-2023	4 (continued)	In *Table 19: Reset and power control block characteristics*: – renamed power-on/power-down reset threshold $V_{POR/PDR}$ into $V_{BOR0/POR/PDR}$. – updated description of $V_{hyst_POR_PDR}$. – renamed Hysteresis voltage for Power-on/power-down reset (including BOR0) into $V_{hyst_POR_PDR}$. Updated measurement conditions for *Typical and maximum current consumption* parameters. Updated *Section : High-speed external clock generated from a crystal/ceramic resonator*. Updated *Table 50: EMI characteristics for fHSE = 8 MHz and fCPU = 550 MHz*. Updated *Section : I/O static current consumption* and *Section : I/O dynamic current consumption*. Updated V_{IH} and V_{OH} in *Table 54: I/O static characteristics* and *Table 55: Output voltage characteristics for all I/Os except PC13, PC14 and PC15*, respectively, to cover the case of Pxy_C I/Os. Updated note 2 in *Table 57: Output timing characteristics (HSLV OFF)* and *Table 58: Output timing characteristics (HSLV ON)*. Reorganized *Section 6.3.19: FMC characteristics* and updated *Figure 34: NAND controller waveforms for read access* and *Figure 35: NAND controller waveforms for write access*. Updated t_{TRIG} in *Table 85: 16-bit ADC accuracy*. Changed V_{DAC_OUT} maximum value (buffer ON) in *Table 89: DAC characteristics*. Updated $f_{DFSDMCLK}$ maximum value in *Table 101: DFSDM measured timing*. In *Table 110: USART characteristics*, changed $t_{w(SCKH)}$ and $t_{w(SCKL)}$ into $t_{w(CKH)}$ and $t_{w(CKL)}$, respectively. Updated *Figure 54: SPI timing diagram - slave mode and CPHA = 0*, *Figure 55: SPI timing diagram - slave mode and CPHA = 1* and *Figure 56: SPI timing diagram - master mode*. Updated *Figure 59: SAI master timing waveforms* and *Figure 60: SAI slave timing waveforms*. *Section : Ethernet interface characteristics*: – added constraints on Pxy_C I/Os. – updated typical $t_{d(TXEN)}$ value in *Table 121: Dynamics characteristics: Ethernet MAC signals for MII*. Added *Section 7.1: Device marking*, and removed device marking sections for all packages. Updated *Table 135: Thermal characteristics* with Θ_{JA}, Θ_{JB}, and Θ_{JC} values for the UFBGA144 package. Changed SPIx_SS to SPIx_NSS in: – *Figure 1: STM32H730xB block diagram*. – *Section 3.39: Serial peripheral interface (SPI)/inter- integrated sound interfaces (I2S)*. – *Table 7: STM32H730xB pin and ball descriptions*. – *Table 8: STM32H730xB pin alternate functions*. – *Section : SPI interface characteristics*.

IMPORTANT NOTICE – PLEASE READ CAREFULLY

STMicroelectronics NV and its subsidiaries (“ST”) reserve the right to make changes, corrections, enhancements, modifications, and improvements to ST products and/or to this document at any time without notice. Purchasers should obtain the latest relevant information on ST products before placing orders. ST products are sold pursuant to ST’s terms and conditions of sale in place at the time of order acknowledgement.

Purchasers are solely responsible for the choice, selection, and use of ST products and ST assumes no liability for application assistance or the design of Purchasers’ products.

No license, express or implied, to any intellectual property right is granted by ST herein.

Resale of ST products with provisions different from the information set forth herein shall void any warranty granted by ST for such product.

ST and the ST logo are trademarks of ST. For additional information about ST trademarks, please refer to *www.st.com/trademarks*. All other product or service names are the property of their respective owners.

Information in this document supersedes and replaces information previously supplied in any prior versions of this document.

© 2023 STMicroelectronics – All rights reserved