STM32WB15CC

Multiprotocol wireless 32-bit MCU Arm®-based Cortex®-M4 with FPU, Bluetooth® 5.2 radio solution

Datasheet - production data

Features

- Includes ST state-of-the-art patented technology
- Radio
  - 2.4 GHz
  - RF transceiver supporting Bluetooth® 5.2 specification
  - RX sensitivity: -95.5 dBm (Bluetooth® Low Energy at 1 Mbps)
  - Programmable output power up to +5.5 dBm with 1 dB steps
  - Integrated balun to reduce BOM
  - Support for 2 Mbps
  - Dedicated Arm® 32-bit Cortex® M0+ CPU for real-time Radio layer
  - Accurate RSSI to enable power control
  - Suitable for systems requiring compliance with radio frequency regulations ETSI EN 300 328, EN 300 440, FCC CFR47 Part 15 and ARIB STD-T66
  - Support for external PA
  - Available integrated passive device (IPD) companion chip for optimized matching solution (MLPF-WB-01E3)
- Ultra-low-power platform
  - 1.71 to 3.6 V power supply
  - – 40 °C to 85 / 105 °C temperature ranges
  - 12 nA shutdown mode
  - 610 nA Standby mode + RTC + 48 KB RAM
  - Active-mode MCU: 33 µA / MHz when RF and SMPS on
  - Radio: Rx 4.5 mA / Tx at 0 dBm 5.2 mA
- Core: Arm® 32-bit Cortex®-M4 CPU with FPU, adaptive real-time accelerator (ART Accelerator) allowing 0-wait-state execution from Flash memory, frequency up to 64 MHz, MPU, 80 DMIPS and DSP instructions
- Performance benchmark



UFQFPN48
7 x 7 mm
solder pad



WLCSP49
0.4 mm pitch

  - 1.25 DMIPS/MHz (Drystone 2.1)
- Supply and reset management
  - High efficiency embedded SMPS step-down converter with intelligent bypass mode
  - Ultra-safe, low-power BOR (brownout reset) with five selectable thresholds
  - Ultra-low-power POR/PDR
  - Programmable voltage detector (PVD)
  - V_{BAT} mode with RTC and backup registers
- Clock sources
  - 32 MHz crystal oscillator with integrated trimming capacitors (Radio and CPU clock)
  - 32 kHz crystal oscillator for RTC (LSE)
  - Internal low-power 32 kHz RC (LSI1)
  - Internal low-drift 32 kHz RC (LSI2)
  - Internal multispeed 100 kHz to 48 MHz oscillator, factory-trimmed
  - High speed internal 16 MHz factory trimmed RC
  - 1x PLL for system clock and ADC
- Memories
  - 320 KB Flash memory with sector protection (PCROP) against R/W operations, enabling radio stack and application
  - 48 KB SRAM, including 36 KB with hardware parity check
  - 20x32-bit backup register
  - Boot loader supporting USART, SPI, I2C interfaces
  - 1 Kbyte (128 double words) OTP

This is information on a product in full production. www.st.com

- Rich analog peripherals (down to 1.62 V)
  - 12-bit ADC 2.5 Msps, 190 µA/Msps
  - 1x ultra-low-power comparator
- System peripherals
  - Inter processor communication controller (IPCC) for communication with Bluetooth® Low Energy
  - HW semaphores for resources sharing between CPUs
  - 1x DMA controller (7x channels) supporting ADC, SPI, I2C, USART, AES, timers
  - 1x USART (ISO 7816, IrDA, SPI Master, Modbus and Smartcard mode)
  - 1x LPUART (low power)
  - 1x SPI 32 Mbit/s
  - 1x I2C (SMBus/PMBus®)
  - Touch sensing controller, up to eight sensors
  - 1x 16-bit, four channels advanced timer
  - 1x 32-bit, four channels timer
  - 2x 16-bit ultra-low-power timer
  - 1x independent Systick
  - 1x independent watchdog
  - 1x window watchdog
- Security and ID
  - Secure firmware installation (SFI) for Bluetooth® Low Energy SW stack
  - 2x hardware encryption AES maximum 256-bit for the application and the Bluetooth® Low Energy
  - HW public key authority (PKA)
  - Cryptographic algorithms: RSA, Diffie-Helman, ECC over GF(p)
  - True random number generator (RNG)
  - Sector protection against R/W operation (PCROP)
  - CRC calculation unit
  - Die information: 96-bit unique ID
  - IEEE 64-bit unique ID. Possibility to derive Bluetooth® Low Energy 48-bit EUI
- Up to 37 fast I/Os, 35 of them 5 V-tolerant
- Development support
  - Serial wire debug (SWD), JTAG for the application processor
  - Application cross trigger
- All packages are ECOPACK2 compliant

Contents

1 Introduction 10

2 Description 11

3 Functional overview 14

3.1 Architecture 14

3.2 Arm® Cortex®-M4 core with FPU 14

3.3 Memories 15

3.3.1 Adaptive real-time memory accelerator (ART Accelerator) 15

3.3.2 Memory protection unit 15

3.3.3 Embedded Flash memory 15

3.3.4 Embedded SRAM 16

3.4 Security and safety 17

3.5 Boot modes and FW update 17

3.6 RF subsystem 17

3.6.1 RF front-end block diagram 18

3.6.2 BLE general description 19

3.6.3 RF pin description 20

3.6.4 Typical RF application schematic 20

3.7 Power supply management 21

3.7.1 Power supply distribution 21

3.7.2 Power supply schemes 22

3.7.3 Linear voltage regulator 25

3.7.4 Power supply supervisor 25

3.7.5 Low-power modes 25

3.7.6 Reset mode 32

3.8 VBAT operation 32

3.9 Interconnect matrix 32

3.10 Clocks and startup 34

3.11 General-purpose inputs/outputs (GPIOs) 36

3.12 Direct memory access controller (DMA) 37

3.13 Interrupts and events 37

3.13.1 Nested vectored interrupt controller (NVIC) 37

3.13.2 Extended interrupts and events controller (EXTI) . . . 38
3.14 Analog to digital converter (ADC) . . . 38
3.14.1 Temperature sensor . . . 38
3.14.2 Internal voltage reference (VREFINT) . . . 39
3.15 Comparator (COMP) . . . 39
3.16 Touch sensing controller (TSC) . . . 39
3.17 True random number generator (RNG) . . . 40
3.18 Timers and watchdogs . . . 40
3.18.1 Advanced-control timer (TIM1) . . . 40
3.18.2 General-purpose timer (TIM2) . . . 41
3.18.3 Low-power timer (LPTIM1 and LPTIM2) . . . 41
3.18.4 Independent watchdog (IWDG) . . . 42
3.18.5 System window watchdog (WWDG) . . . 42
3.18.6 SysTick timer . . . 42
3.19 Real-time clock (RTC) and backup registers . . . 42
3.20 Inter-integrated circuit interface (I^2C) . . . 43
3.21 Universal synchronous/asynchronous receiver transmitter (USART) . . . 44
3.22 Low-power universal asynchronous receiver transmitter (LPUART) . . . 44
3.23 Serial peripheral interface (SPI1) . . . 45
3.24 Development support . . . 45
3.24.1 Serial wire JTAG debug port (SWJ-DP) . . . 45

4 Pinouts and pin description . . . 46

5 Memory mapping . . . 56

6 Electrical characteristics . . . 57
6.1 Parameter conditions . . . 57
6.1.1 Minimum and maximum values . . . 57
6.1.2 Typical values . . . 57
6.1.3 Typical curves . . . 57
6.1.4 Loading capacitor . . . 57
6.1.5 Pin input voltage . . . 57
6.1.6 Power supply scheme . . . 58
6.1.7 Current consumption measurement . . . 59
6.2 Absolute maximum ratings . . . 59

6.3 Operating conditions 61
6.3.1 Summary of main performance 61
6.3.2 General operating conditions 61
6.3.3 RF BLE characteristics 62
6.3.4 Operating conditions at power-up / power-down 67
6.3.5 Embedded reset and power control block characteristics 68
6.3.6 Embedded voltage reference 69
6.3.7 Supply current characteristics 70
6.3.8 Wakeup time from Low-power modes and voltage scaling transition times 83
6.3.9 External clock source characteristics 85
6.3.10 Internal clock source characteristics 88
6.3.11 PLL characteristics 93
6.3.12 Flash memory characteristics 94
6.3.13 EMC characteristics 95
6.3.14 Electrical sensitivity characteristics 96
6.3.15 I/O current injection characteristics 97
6.3.16 I/O port characteristics 98
6.3.17 NRST pin characteristics 101
6.3.18 Analog switches booster 103
6.3.19 Analog-to-Digital converter characteristics 103
6.3.20 Comparator characteristics 108
6.3.21 Temperature sensor characteristics 109
6.3.22 V_{BAT} monitoring characteristics 110
6.3.23 SMPS step-down converter characteristics 110
6.3.24 Timer characteristics 110
6.3.25 Communication interfaces characteristics 111

7 Package information 116
7.1 UFQFPN48 package information 116
7.2 WLCSP49 package information 119
7.3 Thermal characteristics 122
7.3.1 Reference document 122
7.3.2 Selecting the product temperature range 122

8 Ordering information 125

9 Revision history 126

List of tables

Table 1. STM32WB15CC device features and peripheral counts . . . 12
Table 2. Access status vs. readout protection level and execution modes . . . 16
Table 3. RF pin list . . . 20
Table 4. Typical external components . . . 21
Table 5. Power supply typical components . . . 22
Table 6. Functionalities depending on system operating mode . . . 27
Table 7. STM32WB15CC modes overview . . . 30
Table 8. STM32WB15CC CPU1 peripherals interconnect matrix . . . 32
Table 9. DMA implementation . . . 37
Table 10. Temperature sensor calibration values . . . 39
Table 11. Internal voltage reference calibration values . . . 39
Table 12. Timer features . . . 40
Table 13. I2C implementation . . . 44
Table 14. Legend/abbreviations used in the pinout table . . . 48
Table 15. STM32WB15CC pin definitions . . . 49
Table 16. Alternate functions . . . 53
Table 17. Voltage characteristics . . . 59
Table 18. Current characteristics . . . 60
Table 19. Thermal characteristics . . . 60
Table 20. Main performance at VDD = 3.3 V . . . 61
Table 21. General operating conditions . . . 61
Table 22. RF transmitter BLE characteristics . . . 62
Table 23. RF transmitter BLE characteristics (1 Mbps) . . . 63
Table 24. RF transmitter BLE characteristics (2 Mbps) . . . 63
Table 25. RF receiver BLE characteristics (1 Mbps) . . . 64
Table 26. RF receiver BLE characteristics (2 Mbps) . . . 66
Table 27. RF BLE power consumption for VDD = 3.3 V . . . 67
Table 28. Operating conditions at power-up / power-down . . . 67
Table 29. Embedded reset and power control block characteristics . . . 68
Table 30. Embedded internal voltage reference . . . 69
Table 31. Current consumption in Run and Low-power run modes, code with data processing running from Flash memory, ART enable (Cache ON Prefetch OFF), VDD = 3.3 V . . . 71
Table 32. Current consumption in Run and Low-power run modes, code with data processing running from SRAM1, VDD = 3.3 V . . . 72
Table 33. Typical current consumption in Run and Low-power run modes, with different codes running from Flash memory, ART enable (Cache ON Prefetch OFF), VDD= 3.3 V . . . 73
Table 34. Typical current consumption in Run and Low-power run modes, with different codes running from SRAM1, VDD = 3.3 V . . . 74
Table 35. Current consumption in Sleep and Low-power sleep modes, Flash memory ON . . . 75
Table 36. Current consumption in Low-power sleep modes, Flash memory in Power down . . . 75
Table 37. Current consumption in Stop 1 mode . . . 76
Table 38. Current consumption in Stop 0 mode . . . 77
Table 39. Current consumption in Standby mode . . . 77
Table 40. Current consumption in Shutdown mode . . . 79
Table 41. Current consumption in VBAT mode . . . 79
Table 42. Current under Reset condition . . . 80
Table 43. Peripheral current consumption . . . 82
Table 44. Low-power mode wakeup timings . . . 84

Table 45. Regulator modes transition times . . . 84
Table 46. Wakeup time using USART / LPUART . . . 85
Table 47. HSE crystal requirements . . . 85
Table 48. HSE clock source requirements . . . 85
Table 49. HSE oscillator characteristics . . . 86
Table 50. Low-speed external user clock characteristics . . . 86
Table 51. Low-speed external user clock characteristics – Bypass mode . . . 87
Table 52. HSI16 oscillator characteristics . . . 88
Table 53. MSI oscillator characteristics . . . 90
Table 54. LSI1 oscillator characteristics . . . 93
Table 55. LSI2 oscillator characteristics . . . 93
Table 56. PLL characteristics . . . 93
Table 57. Flash memory characteristics . . . 94
Table 58. Flash memory endurance and data retention . . . 94
Table 59. EMS characteristics . . . 95
Table 60. EMI characteristics . . . 96
Table 61. ESD absolute maximum ratings . . . 96
Table 62. Electrical sensitivity . . . 97
Table 63. I/O current injection susceptibility . . . 97
Table 64. I/O static characteristics . . . 98
Table 65. Output voltage characteristics . . . 100
Table 66. I/O AC characteristics . . . 100
Table 67. NRST pin characteristics . . . 102
Table 68. Analog switches booster characteristics . . . 103
Table 69. ADC characteristics . . . 103
Table 70. Maximum ADC R_{AIN} values . . . 105
Table 71. ADC accuracy . . . 106
Table 72. COMP characteristics . . . 108
Table 73. TS characteristics . . . 109
Table 74. V_{BAT} monitoring characteristics . . . 110
Table 75. V_{BAT} charging characteristics . . . 110
Table 76. TIMx characteristics . . . 110
Table 77. IWDG min/max timeout period at 32 kHz (LSI1) . . . 111
Table 78. Minimum I2CCLK frequency in all I2C modes . . . 111
Table 79. I2C analog filter characteristics . . . 112
Table 80. SPI characteristics . . . 112
Table 81. JTAG characteristics . . . 115
Table 82. SWD characteristics . . . 115
Table 83. UFQFPN48 mechanical data . . . 117
Table 84. WLCSP49 mechanical data . . . 120
Table 85. WLCSP49 recommended PCB design rules . . . 121
Table 86. Package thermal characteristics . . . 122
Table 87. Document revision history . . . 126

List of figures

Figure 1. STM32WB15CC block diagram . . . 13
Figure 2. STM32WB15CC RF front-end block diagram . . . 19
Figure 3. External components for the RF part . . . 21
Figure 4. Power distribution . . . 22
Figure 5. Power-up/down sequence . . . 23
Figure 6. Power supply overview . . . 24
Figure 7. Clock tree . . . 36
Figure 8. STM32WB15CCU UFQFPN48 pinout (1) (2) . . . 46
Figure 9. STM32WB15CCU UFQFPN48E pinout (1) (2) . . . 46
Figure 10. STM32WB15CCY WLCSP49 pinout (1) . . . 47
Figure 11. Pin loading conditions . . . 57
Figure 12. Pin input voltage . . . 57
Figure 13. Power supply scheme . . . 58
Figure 14. Current consumption measurement scheme . . . 59
Figure 15. VREFINT vs. temperature . . . 70
Figure 16. Typical application with a 32.768 kHz crystal . . . 87
Figure 17. Low-speed external clock source AC timing diagram . . . 87
Figure 18. HSI16 frequency vs. temperature . . . 89
Figure 19. Typical current consumption vs. MSI frequency . . . 92
Figure 20. I/O input characteristics . . . 99
Figure 21. Recommended NRST pin protection . . . 102
Figure 22. ADC accuracy characteristics . . . 107
Figure 23. Typical connection diagram when using the ADC with FT/TT pins featuring analog switch function . . . 108
Figure 24. SPI timing diagram - Slave mode and CPHA = 0 . . . 113
Figure 25. SPI timing diagram - Slave mode and CPHA = 1 . . . 114
Figure 26. SPI timing diagram - Master mode . . . 114
Figure 27. UFQFPN48 outline . . . 116
Figure 28. UFQFPN48 recommended footprint . . . 117
Figure 29. UFQFPN48 marking example (package top view) . . . 118
Figure 30. WLCSP49 outline . . . 119
Figure 31. WLCSP49 recommended footprint . . . 121

1 Introduction

This document provides the ordering information and mechanical device characteristics of the STM32WB15CC microcontroller, based on Arm® cores[(a)]. Throughout the whole document TBD indicates a value to be defined.

This document must be read in conjunction with the reference manual (RM0473), available from the STMicroelectronics website *www.st.com*.

For information on the device errata with respect to the datasheet and reference manual refer to the STM32WB15CC errata sheet (ES0557), available from the STMicroelectronics website *www.st.com*.

For information on the Arm® Cortex®-M4 and Cortex®-M0+ cores, refer, respectively, to the Cortex®-M4 Technical Reference Manual and to the Cortex®-M0+ Technical Reference Manual, both available on the www.arm.com website.

For information on Bluetooth® refer to www.bluetooth.com.

a. Arm is a registered trademark of Arm Limited (or its subsidiaries) in the US and/or elsewhere.

2 Description

The STM32WB15CC multiprotocol wireless and ultra-low-power device embeds a powerful and ultra-low-power radio compliant with the Bluetooth® Low Energy SIG specification 5.2. It contains a dedicated Arm® Cortex®-M0+ for performing all the real-time low layer operation.

The device is designed to be extremely low-power and is based on the high-performance Arm® Cortex®-M4 32-bit RISC core operating at a frequency of up to 64 MHz. This core features a Floating point unit (FPU) single precision that supports all Arm® single-precision data-processing instructions and data types. It also implements a full set of DSP instructions and a memory protection unit (MPU) that enhances application security.

Enhanced inter-processor communication is provided by the IPCC with six bidirectional channels. The HSEM provides hardware semaphores used to share common resources between the two processors.

The device embeds high-speed memories (320 Kbytes of Flash memory, 48 Kbytes of SRAM) and an extensive range of enhanced I/Os and peripherals.

Direct data transfer between memory and peripherals and from memory to memory is supported by seven DMA channels with a full flexible channel mapping by the DMAMUX peripheral.

The device feature several mechanisms for embedded Flash memory and SRAM: readout protection, write protection and proprietary code readout protection. Portions of the memory can be secured for Cortex® -M0+ exclusive access.

The AES encryption engine, PKA and RNG enable upper layer cryptography.

The device offers a fast 12-bit ADC and one ultra-low-power comparator.

The device embeds a low-power RTC, one advanced 16-bit timer, one general-purpose 32-bit timer, and two 16-bit low-power timers.

In addition, up to eight capacitive sensing channels are available.

The STM32WB15CC also features standard and advanced communication interfaces, namely one USART (ISO 7816, IrDA, Modbus and Smartcard mode), one low- power UART (LPUART), one I2C (SMBus/PMBus), one SPI up to 32 MHz.

The STM32WB15CC operates in the -40 to +85 °C (+105 °C junction) and -40 to +105 °C (+125 °C junction) temperature ranges from a 1.71 to 3.6 V power supply. A comprehensive set of power-saving modes enables the design of low-power applications.

The STM32WB15CC integrates a high efficiency SMPS step-down converter with automatic bypass mode capability when the V_{DD} falls below V_{BORx} (x=1, 2, 3, 4) voltage level (default is 2.0 V). It includes independent power supplies for analog input for ADC and comparator.

A V_{BAT} dedicated supply allows the device to back up the LSE 32.768 kHz oscillator, the RTC and the backup registers, thus enabling the STM32WB15CC to supply these functions even if the main V_{DD} is not present through a CR2032-like battery, a Supercap or a small rechargeable battery.

The STM32WB15CC offers two packages, 48 or 49 pins.

Table 1. STM32WB15CC device features and peripheral counts

Feature		STM32WB15CCUxE	STM32WB15CCU	STM32WB15CCY
Flash memory density		320 KB		
SRAM density		48 KB		
BLE		5.2 (2 Mbps)		
Timers	Advanced	1 (16 bits)		
	General	1 (32 bits)		
	Low power	2 (16 bits)		
	SysTick	1		
Comm interface	SPI	1		
	I2C	1		
	USART(1)	1		
	LPUART	1		
RTC		1		
Tamper pin		1		
Wakeup pin		2		
GPIOs		37	30	25
Capacitive sensing		8	3	2
SMPS		No	Yes	
12-bit ADC Number of channels		13 channels (including 3 internal)		
Internal V_{ref}		Yes		
Analog comparator		1		
Max CPU frequency		64 MHz		
Operating temperature		Ambient operating temperature:-40 to +85 °C and -40 to +105 °C Junction temperature: -40 to +105 °C and -40 to +125 °C		
Operating voltage		1.71 to 3.6 V		
Package		UFQFPN48 7 x 7 mm 0.5 mm pitch, solder pad		WLCSP49 0.4 mm pitch

1. USART peripheral can be used as SPI master.

Figure 1. STM32WB15CC block diagram

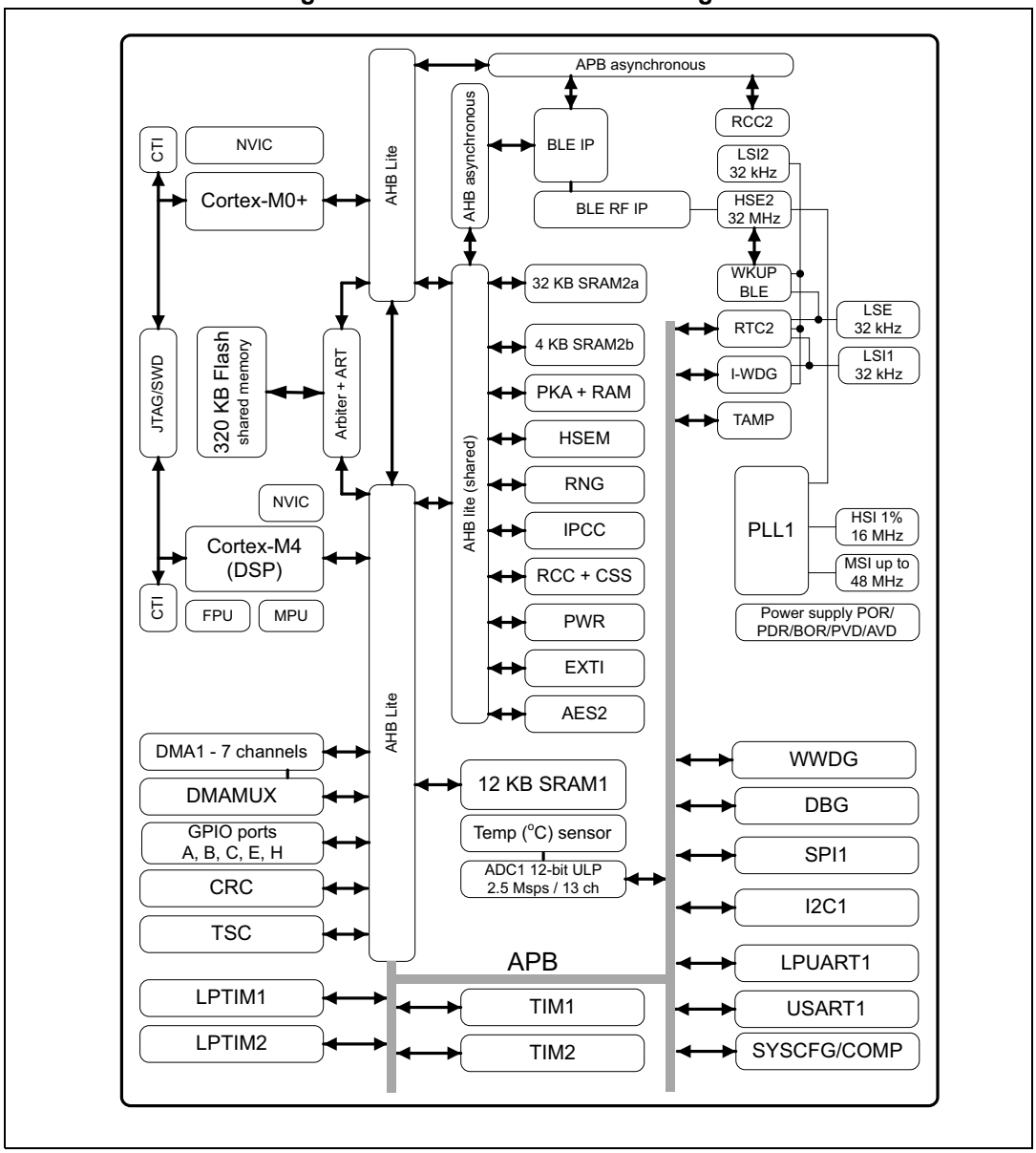

3 Functional overview

3.1 Architecture

The STM32WB15CC multiprotocol wireless device embeds a BLE RF subsystem that interfaces with a generic microcontroller subsystem using an Arm® Cortex®-M4 CPU (called CPU1) on which the host application resides.

The RF subsystem is composed of an RF analog front end, BLE block as well as of a dedicated Arm® Cortex®-M0+ microcontroller (called CPU2), plus proprietary peripherals. The RF subsystem performs all of the BLE stack, reducing the interaction with the CPU1 to high level exchanges.

Some functions are shared between the RF subsystem CPU (CPU2) and the Host CPU (CPU1):

- Flash memories
- SRAM1, SRAM2a and SRAM2b (all can be retained in Standby mode)
- Security peripherals (RNG, PKA)
- Clock RCC
- Power control (PWR)

The communication and the sharing of peripherals between the RF subsystem and the Cortex®-M4 CPU is performed through a dedicated inter processor communication controller (IPCC) and semaphore mechanism (HSEM).

3.2 Arm® Cortex®-M4 core with FPU

The Arm® Cortex®-M4 with FPU is a processor for embedded systems. It has been developed to provide a low-cost platform that meets the needs of MCU implementation, with a reduced pin count and low-power consumption, while delivering outstanding computational performance and an advanced response to interrupts.

The Arm® Cortex®-M4 with FPU 32-bit RISC processor features exceptional code-efficiency, delivering the high-performance expected from an Arm® core in the memory size usually associated with 8- and 16-bit devices.

The processor supports a set of DSP instructions enabling efficient signal processing and complex algorithm execution.

Its single precision FPU speeds up software development by using metalanguage development tools, while avoiding saturation.

With its embedded Arm® core, the STM32WB15CC is compatible with all Arm® tools and software.

Figure 1 shows the general block diagram of the device.

3.3 Memories

3.3.1 Adaptive real-time memory accelerator (ART Accelerator)

The ART Accelerator is a memory accelerator optimized for STM32 industry-standard Arm® Cortex®-M4 processors. It balances the inherent performance advantage of the Arm® Cortex®-M4 over Flash memory technologies, which normally require the processor to wait for the Flash memory at higher frequencies.

To release the processor near 80 DMIPS performance at 64 MHz, the accelerator implements an instruction prefetch queue and branch cache, which increases program execution speed from the 64-bit Flash memory. Based on CoreMark benchmark, the performance achieved thanks to the ART accelerator is equivalent to 0 wait state program execution from Flash memory at a CPU frequency up to 64 MHz.

3.3.2 Memory protection unit

The memory protection unit (MPU) is used to manage the CPU1 accesses to memory to prevent one task to accidentally corrupt the memory or resources used by any other active task. This memory area is organized into up to eight protected areas, which can be divided up into eight subareas. The protection area sizes are between 32 bytes and the whole 4 Gbytes of addressable memory.

The MPU is especially helpful for applications where some critical or certified code must be protected against the misbehavior of other tasks. It is usually managed by an RTOS (real-time operating system). If a program accesses a memory location prohibited by the MPU, the RTOS detects it and takes action. In an RTOS environment, the kernel can dynamically update the MPU area setting, based on the process to be executed.

The MPU is optional and can be bypassed for applications that do not need it.

3.3.3 Embedded Flash memory

The STM32WB15CC device features 320 Kbytes of embedded Flash memory available for storing programs and data, as well as some customer keys.

Flexible protections can be configured thanks to option bytes:

- Readout protection (RDP) to protect the whole memory. Three levels are available:
  - Level 0: no readout protection
  - Level 1: memory readout protection: the Flash memory cannot be read from or written to if either debug features are connected, boot in SRAM or bootloader is selected
  - Level 2: chip readout protection: debug features (Cortex®-M4 and Cortex®-M0+ JTAG and serial wire), boot in SRAM and bootloader selection are disabled (JTAG fuse). This selection is irreversible.

Table 2. Access status vs. readout protection level and execution modes

Area	Protection level	User execution			Debug, boot from SRAM or boot from system memory (loader)		
		Read	Write	Erase	Read	Write	Erase
Main memory	1	Yes	Yes	Yes	No	No	No
	2	Yes	Yes	Yes	N/A	N/A	N/A
System memory	1	Yes	No	No	Yes	No	No
	2	Yes	No	No	N/A	N/A	N/A
Option bytes	1	Yes	Yes	Yes	Yes	Yes	Yes
	2	Yes	No(1)	No(1)	N/A	N/A	N/A
Backup registers	1	Yes	Yes	N/A(2)	No	No	N/A(2)
	2	Yes	Yes	N/A	N/A	N/A	N/A
SRAM2a SRAM2b	1	Yes	Yes	Yes(2)	No	No	No(2)
	2	Yes	Yes	Yes	N/A	N/A	N/A

1. The option byte can be modified by the RF subsystem.
2. Erased when RDP changes from Level 1 to Level 0.

- Write protection (WRP): the protected area is protected against erasing and programming. Two areas can be selected, with 4-Kbyte granularity.
- Proprietary code readout protection (PCROP): two parts of the Flash memory can be protected against read and write from third parties. The protected area is execute-only: it can only be reached by the STM32 CPU, as an instruction code, while all other accesses (DMA, debug and CPU data read, write and erase) are strictly prohibited. Two areas can be selected, with 2-Kbyte granularity. An additional option bit (PCROP_RDP) makes possible to select if the PCROP area is erased or not when the RDP protection is changed from Level 1 to Level 0.

A section of the Flash memory is secured for the RF subsystem CPU2, and cannot be accessed by the host CPU1.

The whole non-volatile memory embeds the error correction code (ECC) feature supporting:

- single error detection and correction
- double error detection
- the address of the ECC fail can be read in the ECC register

The embedded Flash memory is shared between CPU1 and CPU2 on a time sharing basis. A dedicated HW mechanism allows both CPUs to perform Write/Erase operations.

3.3.4 Embedded SRAM

The STM32WB15CC device features 48 Kbytes of embedded SRAM, split in three blocks:

- **SRAM1**: 12 Kbytes mapped at address 0x2000 0000
- **SRAM2a**: 32 Kbytes located at address 0x2003 0000 also mirrored at 0x1000 0000, with hardware parity check
- **SRAM2b**: 4 Kbytes located at address 0x2003 8000 (contiguous with SRAM2a) and mirrored at 0x1000 8000 with hardware parity check

SRAM2a and SRAM2b can be write-protected, with 1-Kbyte granularity. A section of the SRAM2a and SRAM2b is secured for the RF sub-system and cannot be accessed by the host CPU1.

The SRAMs can be accessed in read/write with 0 wait states for all CPU1 and CPU2 clock speeds.

3.4 Security and safety

The STM32WB15CC contains many security blocks both for the BLE and the Host application.

It includes:

- Secure Flash memory partition for RF subsystem-only access
- Secure SRAM partition, that can be accessed only by the RF subsystem
- True random number generator (RNG)
- Advance encryption standard hardware accelerator (AES-256bit, supporting chaining modes ECB, CBC, CTR, GCM, GMAC, CCM)
- Private key acceleration (PKA) including:
  - Modular arithmetic including exponentiation with maximum modulo size of 3136 bits
  - Elliptic curves over prime field scalar multiplication, ECDSA signature, ECDSA verification with maximum modulo size of 521 bits
- Cyclic redundancy check calculation unit (CRC)

A specific mechanism is in place to ensure that all the code executed by the RF subsystem CPU2 can be secure, whatever the Host application.

3.5 Boot modes and FW update

At startup, BOOT0 pin and BOOT1 option bit are used to select one of three boot options:

- Boot from user Flash
- Boot from system memory
- Boot from embedded SRAM

The device always boots on CPU1 core. The embedded bootloader code makes it possible to boot from various peripherals:

- UART
- I2C
- SPI

Secure Firmware update from system boot is provided.

3.6 RF subsystem

The STM32WB15CC embed an ultra-low power multi-standard radio Bluetooth® Low Energy (BLE), compliant with Bluetooth® specification 5.2. The BLE features 1 Mbps and 2 Mbps transfer rates, supports multiple roles simultaneously acting at the same time as

BLE sensor and hub device, embeds Elliptic Curve Diffie-Hellman (ECDH) key agreement protocol, thus ensuring a secure connection.

The BLE stack runs on an embedded Arm® Cortex®-M0+ core (CPU2). The stack is stored on the embedded Flash memory, which is also shared with the Arm® Cortex®-M4 (CPU1) application, making it possible in-field stack update.

3.6.1 RF front-end block diagram

The RF front-end is based on a direct modulation of the carrier in Tx, and uses a low IF architecture in Rx mode.

Thanks to an internal transformer at RF pins, the circuit directly interfaces the antenna (single ended connection, impedance close to 50 Ω). The natural bandpass behavior of the internal transformer, simplifies outside circuitry aimed for harmonic filtering and out of band interferer rejection.

In Transmit mode, the maximum output power is user selectable through the programmable LDO voltage of the power amplifier. A linearized, smoothed analog control offers clean power ramp-up.

In receive mode the circuit can be used in standard high performance or in reduced power consumption (user programmable). The Automatic gain control (AGC) is able to reduce the chain gain at both RF and IF locations, for optimized interference rejection. Thanks to the use of complex filtering and highly accurate I/Q architecture, high sensitivity and excellent linearity can be achieved.

The bill of material is reduced thanks to the high degree of integration. The radio frequency source is synthesized form an external 32 MHz crystal that does not need any external trimming capacitor network thanks to a dual network of user programmable integrated capacitors.

Figure 2. STM32WB15CC RF front-end block diagram

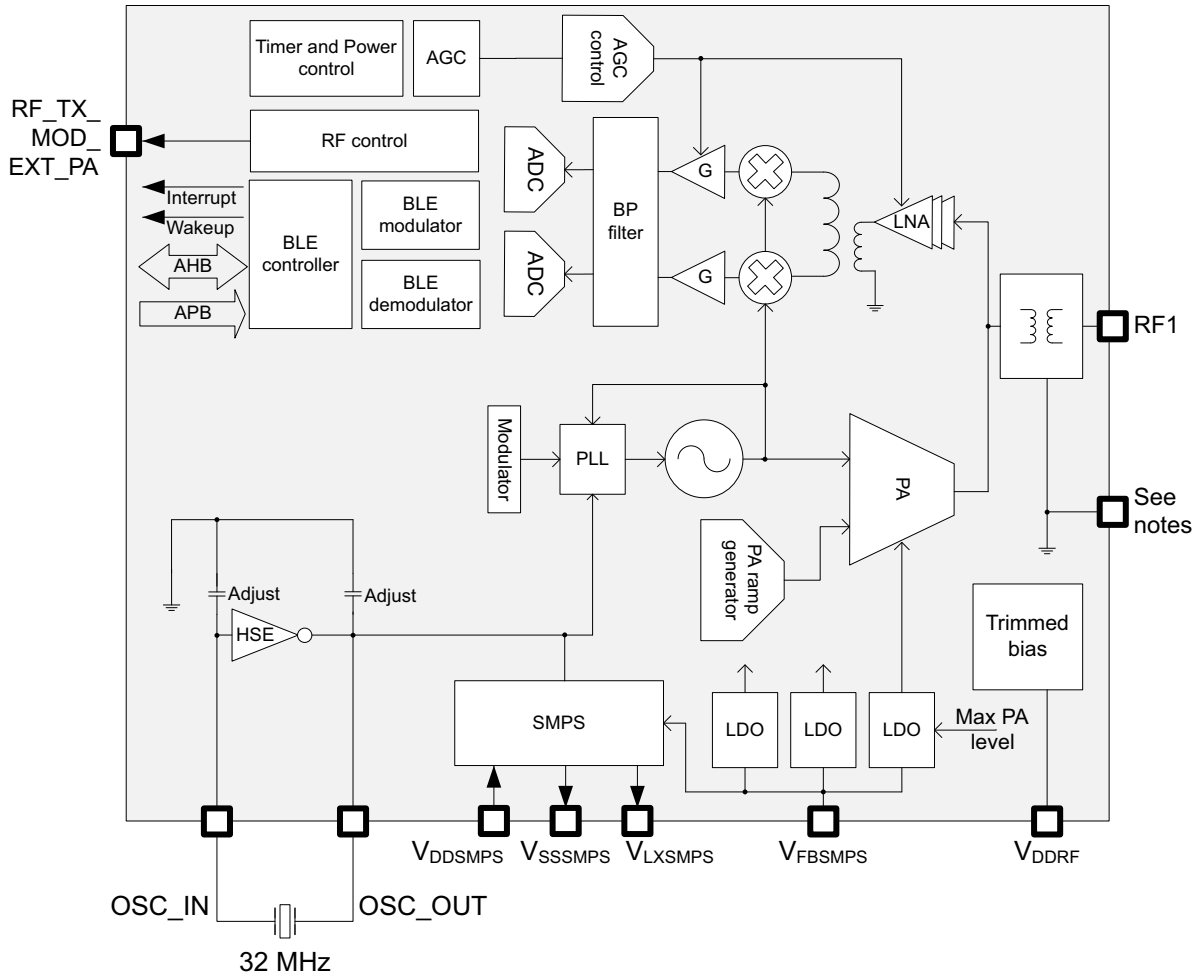

Notes:
- UFQFPN48: V_{SS} through exposed pad, and V_{SSRF} pin must be connected to ground plane
- WLCSP49: V_{SSRF} pins must be connected to ground plane

3.6.2 BLE general description

The BLE block is a master/slave processor, compliant with Bluetooth specification 5.2 standard (2 Mbps).

It integrates a 2.4 GHz RF transceiver and a powerful Cortex®-M0+ core, on which a complete power-optimized stack for Bluetooth Low Energy protocol runs, providing master / slave role support

- GAP: central, peripheral, observer or broadcaster roles
- ATT/GATT: client and server
- SM: privacy, authentication and authorization
- L2CAP
- Link layer: AES-128 encryption and decryption

In addition, according to Bluetooth specification 5.2, the BLE block provides:

- Multiple roles simultaneous support
- Master/slave and multiple roles simultaneously
- LE data packet length extension (making it possible to reach 800 kbps at application level)
- LE privacy 1.2
- LE secure connections
- Flexible Internet connectivity options
- High data rate (2 Mbps)

The device allows the applications to meet the tight peak current requirements imposed by the use of standard coin cell batteries. When the high efficiency embedded SMPS step-down converter is used, the RF front end consumption (I_{tmax}) is only 7.4 mA at the highest output power (5.5 dBm).

Ultra-low-power sleep modes and very short transition time between operating modes result in very low average current consumption during real operating conditions, resulting in longer battery life.

The BLE block integrates a full bandpass balun, thus reducing the need for external components.

The link between the Cortex®-M4 application processor (CPU1) running the application, and the BLE stack running on the dedicated Cortex®-M0+ (CPU2) is performed through a normalized API, using a dedicated IPCC.

3.6.3 RF pin description

The RF block contains dedicated pins, listed in *Table 3*.

Table 3. RF pin list

Name	Type	Description
RF1	I/O	RF Input/output, must be connected to the antenna through a low-pass matching network
OSC_OUT		32 MHz main oscillator, also used as HSE source
OSC_IN		
RF_TX_ MOD_EXT_PA		External PA transmit control
VDDRF	V_{DD}	Dedicated supply, must be connected to V_{DD}
VSSRF(1)	V_{SS}	To be connected to GND

1. On packages with exposed pad, this pad must be connected to GND plane for correct RF operation.

3.6.4 Typical RF application schematic

The schematic in *Figure 3* and the external components listed in *Table 3* are purely indicative. For more details refer to the “Reference design” provided in separate documents.

Figure 3. External components for the RF part

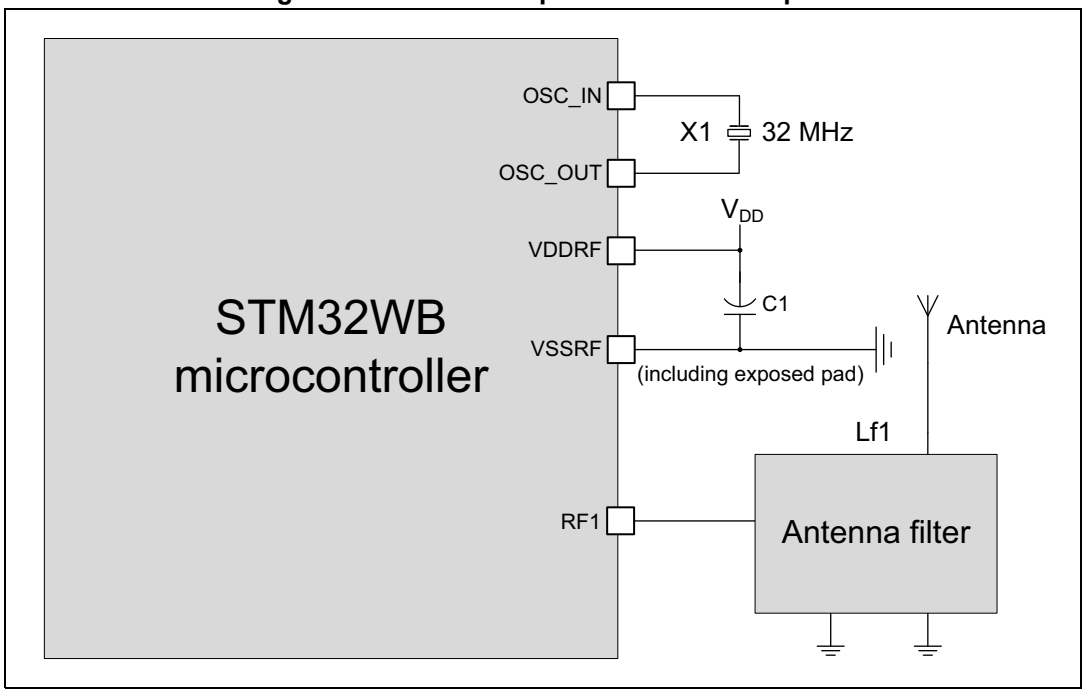

Table 4. Typical external components

Component	Description	Value
C1	Decoupling capacitance for RF	100 nF // 100 pF
X1	32 MHz crystal(1)	32 MHz
Antenna filter	Antenna filter and matching network	Refer to AN5165, on *www.st.com*
Antenna	2.4 GHz band antenna	-

1. e.g. NDK reference: NX2016SA 32 MHz EXS00A-CS06654.

Note: For more details refer to AN5165 "Development of RF hardware using STM32WB microcontrollers" available on www.st.com.

3.7 Power supply management

3.7.1 Power supply distribution

The device integrate an SMPS step-down converter to improve low power performance when the V_{DD} voltage is high enough. This converter has an intelligent mode that automatically enters in bypass mode when the V_{DD} voltage falls below a specific BORx (x = 1, 2, 3 or 4) voltage.

By default, at Reset the SMPS is in bypass mode.

The device can be operated without the SMPS by just wiring its output to V_{DD}. This is the case for applications where the voltage is low, or where the power consumption is not critical.

Figure 4. Power distribution

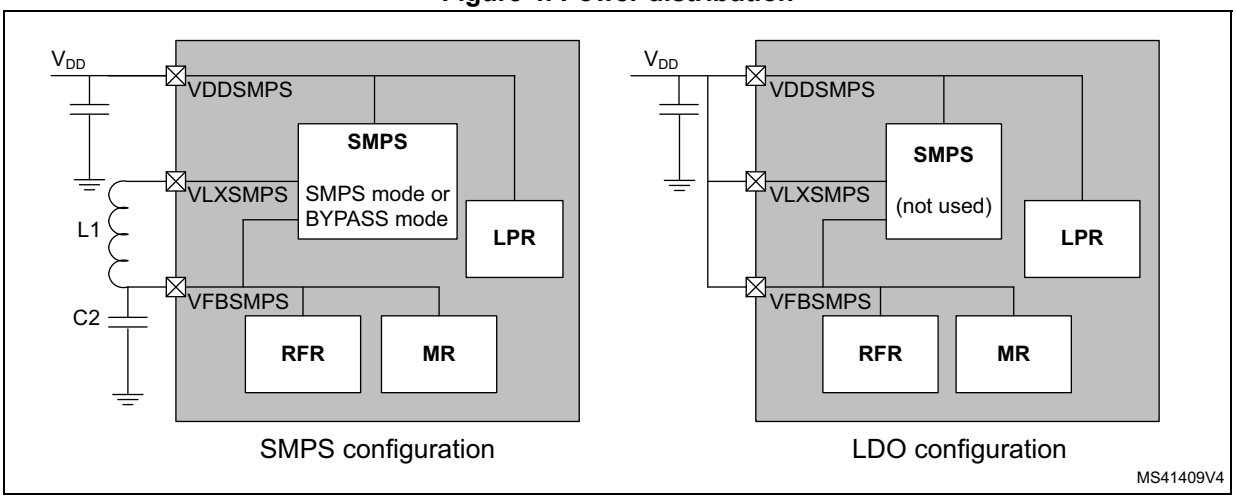

Table 5. Power supply typical components

Component	Description		Value
C2	SMPS output capacitor(1)		4.7 µF
L1(2)	SMPS inductance	For 8 MHz(3)	2.2 µH
		For 4 MHz(4)	10 µH

1. e.g. GRM155R60J475KE19.
2. An extra 10 nH inductor in series with L1 is needed to improve the receiver performance, e.g Murata LQG15WZ10NJ02D
3. e.g. Wurth 74479774222.
4. e.g. Murata LQM21FN100M70L.

The SMPS can also be switched on or set in bypass mode at any time by the application software, for example when very accurate ADC measurement are needed.

3.7.2 Power supply schemes

The device has different voltage supplies (see *Figure 6*) and can operate within the following voltage ranges:

- V_{DD} = 1.71 to 3.6 V: external power supply for I/Os (V_{DDIO}), the internal regulator and system functions such as RF, SMPS, reset, power management and internal clocks. It is provided externally through VDD pins. V_{DDRF} and V_{DDSMPS} must be always connected to VDD pins.
- V_{DDA} = 1.62 (ADC/COMPs) to 3.6 V: external analog power supply for ADC and comparator. The V_{DDA} voltage level can be independent from the V_{DD} voltage. When not used V_{DDA} must be connected to V_{DD}.

During power up/down, the following power sequence requirements must be respected:

- When V_{DD} is below 1 V the other power supply (V_{DDA}), must remain below V_{DD} + 300 mV
- When V_{DD} is above 1 V all power supplies are independent.

Figure 5. Power-up/down sequence

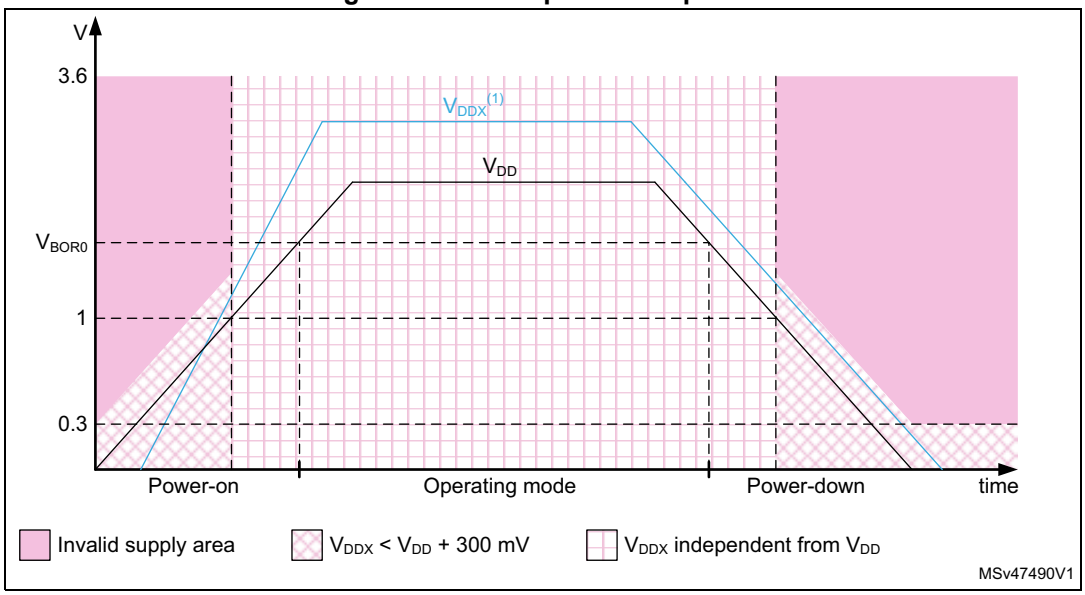

1. V_{DDX} refers to V_{DDA}.

During the power down phase, V_{DD} can temporarily become lower than other supplies only if the energy provided to the MCU remains below 1 mJ. This allows the external decoupling capacitors to be discharged with different time constants during the power down transient phase.

Note: V_{DD}, V_{DDRF} and V_{DDSMPS} must be wired together, so they can follow the same voltage sequence.

Figure 6. Power supply overview

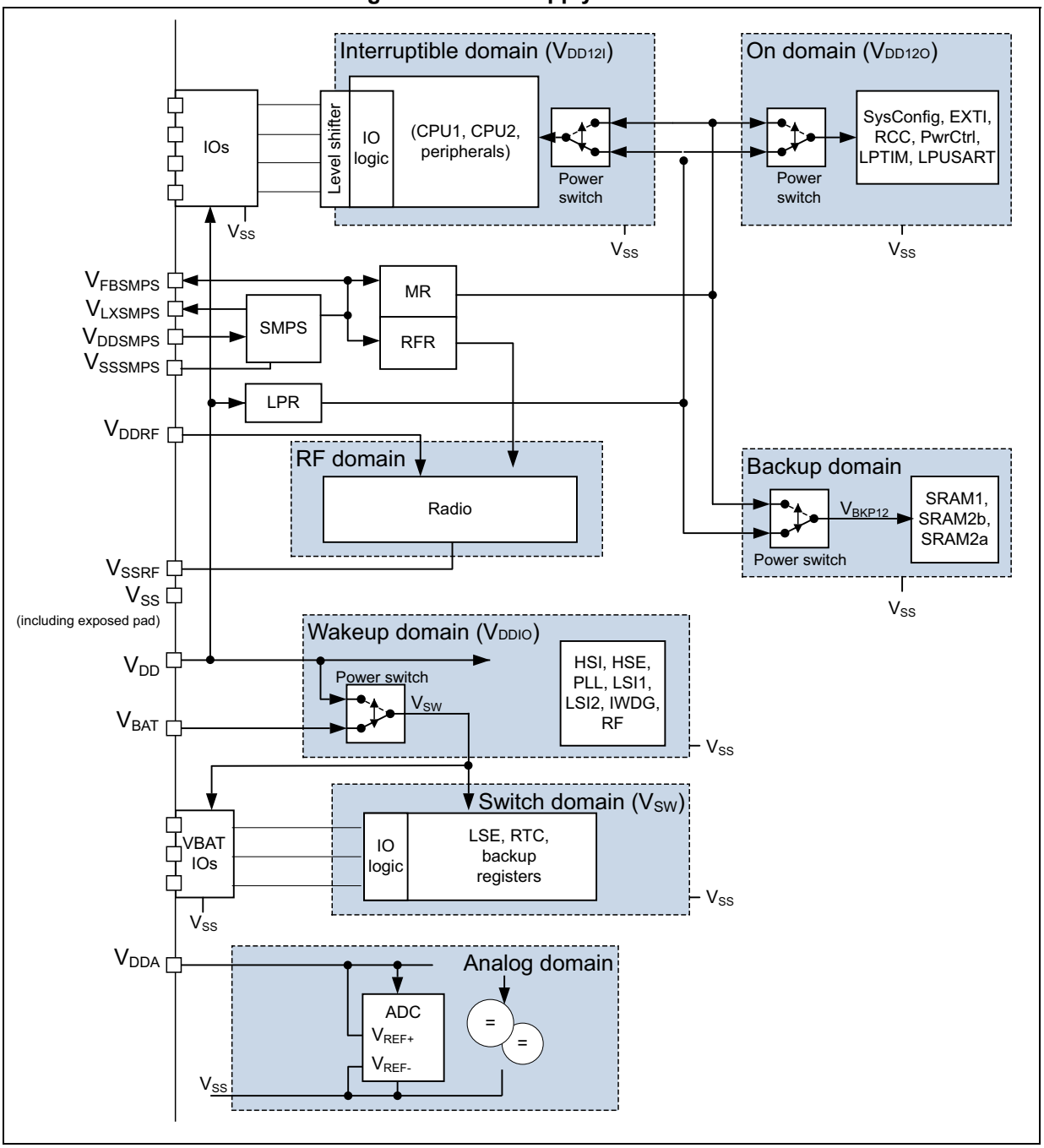

3.7.3 Linear voltage regulator

Three embedded linear voltage regulators supply most of the digital and RF circuitries, the main regulator (MR), the low-power regulator (LPR) and the RF regulator (RFR).

- The MR is used in the Run and Sleep modes and in the Stop 0 mode.
- The LPR is used in Low-Power Run, Low-Power Sleep and Stop 1 modes. It is also used to supply the SRAMs in Standby with retention.
- The RFR is used to supply the RF analog part, its activity is automatically managed by the RF subsystem.

All the regulators are in power-down in Standby and Shutdown modes: the regulator output is in high impedance, and the kernel circuitry is powered down, inducing zero consumption.

The ultralow-power STM32WB15CC supports dynamic voltage scaling to optimize its power consumption in run mode. The voltage from the main regulator that supplies the logic (VCORE) can be adjusted according to the system's maximum operating frequency.

VCORE can also be supplied by the low-power regulator, the main regulator being switched off. The system is then in Low-power run mode. In this case the CPU is running at up to 2 MHz, and peripherals with independent clock can be clocked by HSI16 (in this mode the RF subsystem is not available).

3.7.4 Power supply supervisor

An integrated ultra-low-power brown-out reset (BOR) is active in all modes except Shutdown ensuring proper operation after power-on and during power down. The device remains in reset mode when the monitored supply voltage V_{DD} is below a specified threshold, without the need for an external reset circuit.

The lowest BOR level is 1.71 V at power on, and other higher thresholds can be selected through option bytes.The device features an embedded programmable voltage detector (PVD) that monitors the V_{DD} power supply and compares it with the V_{PVD} threshold. An interrupt can be generated when V_{DD} drops below the V_{PVD} threshold and/or when V_{DD} is higher than the V_{PVD} threshold. The interrupt service routine can then generate a warning message and/or put the MCU into a safe state. The PVD is enabled by software.

In addition, the device embeds a peripheral voltage monitor (PVM) that compares the independent supply voltage V_{DDA} with a fixed threshold to ensure that the peripheral is in its functional supply range.

Any BOR level can also be used to automatically switch the SMPS step-down converter in bypass mode when the V_{DD} voltage drops below a given voltage level. The mode of operation is selectable by register bit, the BOR level is selectable by option byte.

3.7.5 Low-power modes

This ultra-low-power device supports several low-power modes to achieve the best compromise between low-power consumption, short startup time, available peripherals and available wakeup sources.

By default, the microcontroller is in Run mode, after a system or a power on Reset. It is up to the user to select one of the low-power modes described below:

- **Sleep**

  In Sleep mode, only the CPU1 is stopped. All peripherals, including the RF subsystem, continue to operate and can wake up the CPU when an interrupt/event occurs.

- **Low-power run**

  This mode is achieved with VCORE supplied by the low-power regulator to minimize the regulator operating current. The code can be executed from SRAM or from the Flash memory, and the CPU1 frequency is limited to 2 MHz. The peripherals with independent clock can be clocked by HSI16. The RF subsystem is not available in this mode and must be OFF.

- **Low-power sleep**

  This mode is entered from the low-power run mode. Only the CPU1 clock is stopped. When wakeup is triggered by an event or an interrupt, the system reverts to the low-power run mode. The RF subsystem is not available in this mode and must be OFF.

- **Stop 0 and Stop 1**

  Stop modes achieve the lowest power consumption while retaining the content of all the SRAM and registers. The LSE (or LSI) is still running.

  The RTC can remain active (Stop mode with RTC, Stop mode without RTC).

  Some peripherals with wakeup capability can enable the HSI16 RC during Stop modes to detect their wakeup condition.

  Two modes are available: Stop 0 and Stop 1.

  Stop 1 offers several active peripherals and wakeup sources. In Stop 0 mode the main regulator remains ON, allowing a very fast wakeup time but with higher consumption.

  In these modes the RF subsystem can wait for incoming events in all Stop modes.

  The system clock when exiting from Stop 0 or Stop1 modes can be either MSI up to 48 MHz or HSI16 if the RF subsystem is disabled. If the RF subsystem is used the exits must be set to HSI16 only.

- **Standby**

  The Standby mode is used to achieve the lowest power consumption with BOR. The internal regulator is switched off so that the VCORE domain is powered off.

  The RTC can remain active (Standby mode with RTC).

  The brown-out reset (BOR) always remains active in Standby mode.

  The state of each I/O during standby mode can be selected by software: I/O with internal pull-up, internal pull-down or floating.

  After entering Standby mode, register content is lost except for registers in the Backup domain and Standby circuitry. Optionally, SRAMs can be retained in Standby mode, supplied by the low-power regulator (Standby with 48 KB SRAM retention mode).

  The device exits Standby mode when an external reset (NRST pin), an IWDG reset, WKUP pin event (configurable rising or falling edge), or an RTC event occurs (alarm, periodic wakeup, timestamp, tamper) or a failure is detected on LSE (CSS on LSE).

The system clock after wakeup is 16 MHz, derived from the HSI16. This low power mode is not selectable for Radio activity.

- **Shutdown**

  The Shutdown mode allows to achieve the ultimate lowest power consumption. The internal regulator is switched off so that the VCORE domain is powered off.

  The RTC can remain active (Shutdown mode with RTC, Shutdown mode without RTC).

  The BOR is not available in Shutdown mode. No power voltage monitoring is possible in this mode, therefore the switch to Backup domain is not supported.

  SRAM1, SRAM2a, SRAM2b and register contents are lost except for registers in the Backup domain.

  The device exits Shutdown mode when an external reset (NRST pin), a WKUP pin event (configurable rising or falling edge), or an RTC event occurs (alarm, periodic wakeup, timestamp, tamper).

  The system clock after wakeup is 4 MHz, derived from the MSI.

  This low-power mode is not selectable for Radio activity.

When the RF subsystem is active, it changes the power state according to its needs (Run, Stop, Standby). This operation is transparent for the CPU1 host application and managed by a dedicated HW state machine. At any given time the effective power state reached is the higher one needed by both the CPU1 and RF sub-system.

Table 6 summarizes the peripheral features over all available modes. Wakeup capability is detailed in gray cells.

Table 6. Functionalities depending on system operating mode(1)

Peripheral	Run	Sleep	Low-power run	Low-power sleep	Stop0		Stop1		Standby		Shutdow		VBAT
					-	Wakeup capability	-	Wakeup capability	-	Wakeup capability	-	Wakeup capability	
CPU1	Y	-	Y	-	-	-	-	-	-	-	-	-	-
CPU2	Y	-	Y	-	-	-	-	-	-	-	-	-	-
Radio-system (BLE)	Y	Y	-	-	-	Y	-	Y	-	-	-	-	-
Flash memory	Y	Y	O	O	R	-	R	-	R	-	R	-	R
SRAM1	Y	O(2)	Y	O(2)	R	-	R	-	O(2)	-	-	-	-
SRAM2a	Y	O(2)	Y	O(2)	R	-	R	-	O(2)	-	-	-	-
SRAM2b	Y	O(2)	Y	O(2)	R	-	R	-	O(2)	-	-	-	-
Backup registers	Y	Y	Y	Y	R	-	R	-	R	-	R	-	R
Brown-out reset (BOR)	Y	Y	Y	Y	Y	Y	Y	Y	Y	Y	-	-	-
Brown-out SMPS force bypass (BOR)	Y	Y	Y	Y	Y	Y	-	-	-	-	-	-	-
Programmable voltage detector (PVD)	O	O	O	O	O	O	O	O	-	-	-	-	-

Table 6. Functionalities depending on system operating mode[1] (continued)

Peripheral	Run	Sleep	Low-power run	Low-power sleep	Stop0		Stop1		Standby		Shutdow		VBAT
					-	Wakeup capability	-	Wakeup capability	-	Wakeup capability	-	Wakeup capability	
Peripheral voltage monitor (PVMx; x=3)	O	O	O	O	O	O	O	O	-	-	-	-	-
DMAx (x=1)	O	O	O	O	-	-	-	-	-	-	-	-	-
High speed internal (HSI16)	O	O	O	O	O[3]	-	O[3]	-	-	-	-	-	-
High speed external (HSE)	O	O	O	O	-	-	-	-	-	-	-	-	-
Low speed internal (LSI)	O	O	O	O	O	-	O	-	O	-	-	-	-
Low speed external (LSE)	O	O	O	O	O	-	O	-	O	-	O	-	O
Multi-speed internal (MSI)	O	O	O	O	-	-	-	-	-	-	-	-	-
Clock security system (CSS)	O	O	O	O	-	-	-	-	-	-	-	-	-
Clock security system on LSE	O	O	O	O	O	O	O	O	O	O	-	-	-
RTC / Auto wakeup	O	O	O	O	O	O	O	O	O	O	O	O	O
Number of RTC tamper pins	1	1	1	1	1	O	1	O	1	O	1	O	1
USART1	O	O	O	O	O[4]	O[4]	O[4]	O[4]	-	-	-	-	-
Low-power UART (LPUART)	O	O	O	O	O[4]	O[4]	O[4]	O[4]	-	-	-	-	-
I2C1	O	O	O	O	O[5]	O[5]	O[5]	O[5]	-	-	-	-	-
SPIx (x=1)	O	O	O	O	-	-	-	-	-	-	-	-	-
ADC1	O	O	O	O	-	-	-	-	-	-	-	-	-
COMPx (x=1)	O	O	O	O	O	O	O	O	-	-	-	-	-
Temperature sensor	O	O	O	O	-	-	-	-	-	-	-	-	-
Timers (TIMx)	O	O	O	O	-	-	-	-	-	-	-	-	-
Low-power timer 1 (LPTIM1)	O	O	O	O	O	O	O	O	-	-	-	-	-
Low-power timer 2 (LPTIM2)	O	O	O	O	O	O	O	O	-	-	-	-	-
Independent watchdog (IWDG)	O	O	O	O	O	O	O	O	O	O	-	-	-
Window watchdog (WWDG)	O	O	O	O	-	-	-	-	-	-	-	-	-
SysTick timer	O	O	O	O	-	-	-	-	-	-	-	-	-
Touch sensing controller (TSC)	O	O	O	O	-	-	-	-	-	-	-	-	-
True random number generator (RNG)	O	O	-	-	-	-	-	-	-	-	-	-	-
AES hardware accelerator	O	O	O	O	-	-	-	-	-	-	-	-	-
CRC calculation unit	O	O	O	O	-	-	-	-	-	-	-	-	-

Table 6. Functionalities depending on system operating mode(1) (continued)

Peripheral	Run	Sleep	Low-power run	Low-power sleep	Stop0		Stop1		Standby		Shutdow		VBAT
					-	Wakeup capability	-	Wakeup capability	-	Wakeup capability	-	Wakeup capability	
IPCC	O	-	O	-	-	-	-	-	-	-	-	-	-
HSEM	O	-	O	-	-	-	-	-	-	-	-	-	-
PKA	O	O	O	O	-	-	-	-	-	-	-	-	-
GPIOs	O	O	O	O	O	O	O	O	(6)	2 pins (7)	(8)	2 pins (8)	-

1. Legend: Y = Yes (enabled). O = Optional (disabled by default, can be enabled by software). R = data retained. - = Not available. Gray cells indicate Wakeup capability.
2. The SRAM clock can be gated on or off.
3. Some peripherals with wakeup from Stop capability can request HSI16 to be enabled. In this case, HSI16 is woken up by the peripheral, and only feeds the peripheral which requested it. HSI16 is automatically put off when the peripheral does not need it anymore.
4. UART and LPUART reception is functional in Stop mode, and generates a wakeup interrupt on Start, address match or received frame event.
5. I2C address detection is functional in Stop mode, and generates a wakeup interrupt in case of address match.
6. I/Os can be configured with internal pull-up, pull-down or floating in Standby mode.
7. The I/Os with wakeup from Standby/Shutdown capability are PA0 and PA2.
8. I/Os can be configured with internal pull-up, pull-down or floating in Shutdown mode but the configuration is lost when exiting the Shutdown mode.

Table 7. STM32WB15CC modes overview

Mode	Regulator	CPU1	Flash	SRAM	Clocks	DMA and Peripherals	Wakeup source	Consumption(1)	Wakeup time
Run	MR	Yes	ON(2)	ON	Any	All	N/A	91 µA/MHz	N/A
LPRun	LPR	Yes	ON(2)	ON	Any except PLL	All except RF and RNG	N/A	90 µA/MHz	15.33 µs
Sleep	MR	No	ON(2)	ON(3)	Any	All	Any interrupt or event	28 µA/MHz	9 cycles
LPSleep	LPR	No	ON(2)	ON(3)	Any except PLL	All except RF and RNG	Any interrupt or event	27 µA/MHz	9 cycles
Stop 0	MR	No	OFF	ON	LSE, LSI, HSE(4), HSI16(5)	RF, BOR, PVD, PVM, RTC, IWDG, COMPx (x=1), USART1(6), LPUART1(6), I2C1(7), LPTIMx (x=1, 2), SMPS All other peripherals are frozen.	Reset pin, all I/Os, RF, BOR, PVD, PVM, RTC, IWDG, COMPx (x=1), USART1, LPUART1, I2C1, LPTIMx (x=1, 2)	100 µA	1.7 µs
Stop 1	LPR	No	OFF	ON	LSE, LSI, HSE(4), HSI16(5)	RF, BOR, PVD, PVM, RTC, IWDG, COMPx (x=1), USART1(6), LPUART1(6), I2C1(7), LPTIMx (x=1, 2) All other peripherals are frozen.	Reset pin, all I/Os RF, BOR, PVD, PVM, RTC, IWDG, COMPx (x=1), USART1, LPUART1, I2C1, LPTIMx (x=1, 2)	3.05 µA w/o RTC 3.35 µA w RTC	4.7 µs
Standby	LPR	No	OFF	SRAMs ON	LSE, LSI	BOR, RTC, IWDG All other peripherals are powered off. I/O configuration can be floating, pull-up or pull-down	Reset pin, two I/Os (WKUPx)(8) BOR, RTC, IWDG	0.335 µA w/o RTC 0.61 µA w RTC	51 µs
	OFF			OFF				0.243 µA w/o RTC 0.518 µA w RTC	
Shutdown	OFF	No	OFF	OFF	LSE	RTC All other peripherals are powered off. I/O configuration can be floating, pull-up or pull-down(9)	Two I/Os (WKUPx)(8), RTC	0.012 µA w/o RTC 0.210 µA w/ RTC	-

1. Typical current at V_{DD} = 1.8 V, 25 °C. for STOPx, SHUTDOWN and Standby, else V_{DD} = 3.3 V, 25 °C.

2. The Flash memory controller can be placed in power-down mode if the RF subsystem is not in use and all the program is run from the SRAM.
3. The SRAM1 and SRAM2 clocks can be gated off independently.
4. HSE (32 MHz) automatically used when RF activity is needed by the RF subsystem.
5. HSI16 (16 MHz) automatically used by some peripherals.
6. U(S)ART and LPUART reception is functional in Stop mode, and generates a wakeup interrupt on Start, Address match or Received frame event.
7. I2C address detection is functional in Stop mode, and generates a wakeup interrupt in case of address match.
8. I/Os with wakeup from Standby/Shutdown capability: PA0, PA2.
9. I/Os can be configured with internal pull-up, pull-down or floating but the configuration is lost immediately when exiting the Shutdown mode.

3.7.6 Reset mode

To improve the consumption under reset, the I/Os state under and after reset is “analog state” (the I/O Schmitt trigger is disabled). In addition, the internal reset pull-up is deactivated when the reset source is internal.

3.8 VBAT operation

The VBAT pin allows to power the device VBAT domain (RTC, LSE and Backup registers) from an external battery, an external supercapacitor, or from V_{DD} when no external battery nor an external supercapacitor are present. One anti-tamper detection pin is available in VBAT mode.

VBAT operation is automatically activated when V_{DD} is not present.

An internal VBAT battery charging circuit is embedded and can be activated when V_{DD} is present.

Note: When the microcontroller is supplied only from VBAT, external interrupts and RTC alarm/events do not exit it from VBAT operation.

3.9 Interconnect matrix

Several peripherals have direct connections between them. This allows autonomous communication between peripherals, saving CPU1 resources and, consequently, reducing power supply consumption. In addition, these hardware connections result in fast and predictable latency.

Depending on peripherals, these interconnections can operate in Run, Sleep, Low-power run and Sleep, Stop 0 and Stop 1 modes.

Table 8. STM32WB15CC CPU1 peripherals interconnect matrix

Source	Destination	Action	Run	Sleep	Low-power run	Low-power	Stop 0 / Stop 1
TIMx	TIMx	Timers synchronization or chaining	Y	Y	Y	Y	-
	ADC1	Conversion triggers	Y	Y	Y	Y	-
	DMA	Memory to memory transfer trigger	Y	Y	Y	Y	-
	COMP1	Comparator output blanking	Y	Y	Y	Y	-
COMPx	TIM1 TIM2	Timer input channel, trigger, break from analog signals comparison	Y	Y	Y	Y	-
	LPTIMERx	Low-power timer triggered by analog signals comparison	Y	Y	Y	Y	Y
ADC1	TIM1	Timer triggered by analog watchdog	Y	Y	Y	Y	-
RTC	LPTIMERx	Low-power timer triggered by RTC alarms or tampers	Y	Y	Y	Y	Y

Table 8. STM32WB15CC CPU1 peripherals interconnect matrix (continued)

Source	Destination	Action	Run	Sleep	Low-power run	Low-power	Stop 0 / Stop 1
All clock sources (internal and external)	TIM2	Clock source used as input channel for RC measurement and trimming	Y	Y	Y	Y	-
CSS CPU (hard fault) SRAM (parity error) Flash memory (ECC error) COMP1 PVD	TIM1	Timer break	Y	Y	Y	Y	-
GPIO	TIMx	External trigger	Y	Y	Y	Y	-
	LPTIMERx	External trigger	Y	Y	Y	Y	Y
	ADC1	Conversion external trigger	Y	Y	Y	Y	-

3.10 Clocks and startup

The STM32WB15CC device integrates several clock sources:

- LSE: 32.768 kHz external oscillator, for accurate RTC and calibration with other embedded RC oscillators
- LSI1: 32 kHz on-chip low-consumption RC oscillator
- LSI2: 32 kHz (untrimmable), on-chip temperature stable RC oscillator, can be used by the RF subsystem instead of LSE
- HSE: high quality 32 MHz external oscillator with trimming, needed by the RF subsystem
- HSI16: 16 MHz high accuracy on-chip RC oscillator
- MSI: 100 kHz to 48 MHz multiple speed on-chip low power oscillator, can be trimmed using the LSE signal

The clock controller (see *Figure 7*) distributes the clocks coming from the different oscillators to the core and the peripherals including the RF subsystem. It also manages clock gating for low power modes and ensures clock robustness. It features:

- **Clock prescaler:** to get the best trade-off between speed and current consumption, the clock frequency to the CPU and peripherals can be adjusted by a programmable prescaler
- **Safe clock switching:** clock sources can be changed safely on the fly in run mode through a configuration register.
- **Clock management:** to reduce power consumption, the clock controller can stop the clock to the core, individual peripherals or memory.
- **System clock source:** four different clock sources can be used to drive the master clock SYSCLK:
  - 16 MHz high-speed internal RC oscillator (HSI16), trimmable by software, that can supply a PLL
  - Multispeed internal RC oscillator (MSI), trimmable by software, able to generate 12 frequencies from 100 kHz to 48 MHz. When a 32.768 kHz clock source is available in the system (LSE), the MSI frequency can be automatically trimmed by hardware to reach better than ±0.25% accuracy. The MSI can supply a PLL.
  - System PLL that can be fed by HSE, HSI16 or MSI, with a maximum frequency of 64 MHz.
- **Auxiliary clock source:** two ultralow-power clock sources that can be used to drive the real-time clock:
  - 32.768 kHz low-speed external crystal (LSE), supporting four drive capability modes. The LSE can also be configured in bypass mode for an external clock.
  - 32 kHz low-speed internal RC (LSI1), also used to drive the independent watchdog. The LSI1 clock accuracy is ±5%.
  - 32 kHz low-speed internal RC (LSI2), with ±200 ppm / °C stability over temperature.
- **Peripheral clock sources:** Several peripherals (RNG, USARTs, I2C, LPTimers, ADC) have their own independent clock whatever the system clock. A PLL having three

independent outputs for the highest flexibility can generate independent clocks for the ADC and the RNG.

- **Startup clock:** after reset, the microcontroller restarts by default with an internal 4 MHz clock (MSI). The prescaler ratio and clock source can be changed by the application program as soon as the code execution starts.
- **Clock security system (CSS):** this feature can be enabled by software. If an HSE clock failure occurs, the master clock is automatically switched to HSI16 and a software interrupt is generated if enabled. LSE failure can also be detected and an interrupt generated.
- Clock-out capability:
  - **MCO: microcontroller clock output:** it outputs one of the internal clocks for external use by the application. Low frequency clocks (LSIx, LSE) are available down to Stop 1 low power state.
  - **LSCO: low speed clock output:** it outputs LSI or LSE in all low-power modes down to Standby.

Several prescalers allow the user to configure the AHB frequencies, the high speed APB (APB2) and the low speed APB (APB1) domains. The maximum frequency of the AHB and the APB domains is 64 MHz.

Figure 7. Clock tree

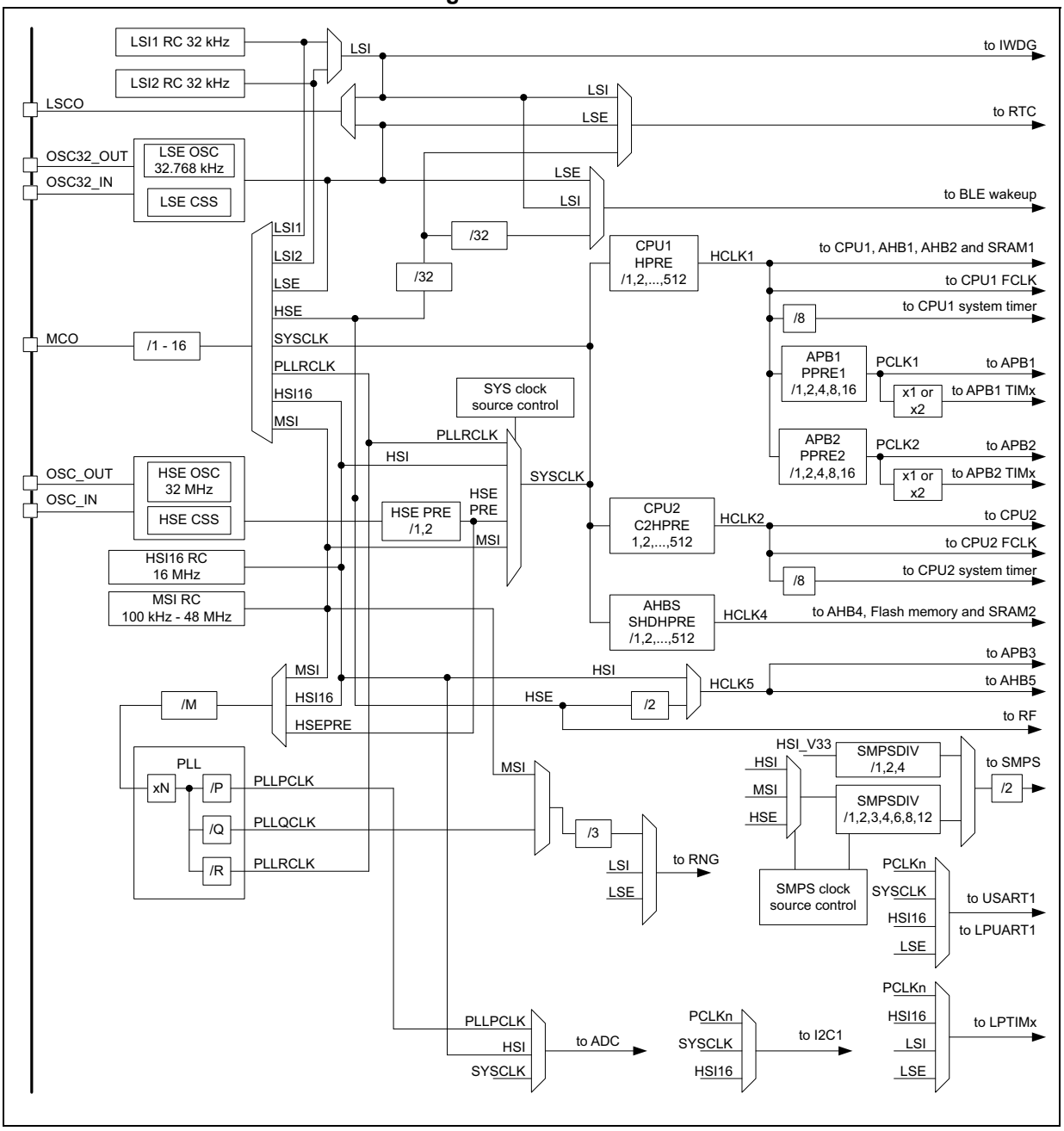

3.11 General-purpose inputs/outputs (GPIOs)

Each of the GPIO pins can be configured by software as output (push-pull or open-drain), as input (with or without pull-up or pull-down) or as peripheral alternate function. Most of the GPIO pins are shared with digital or analog alternate functions. Fast I/O toggling can be achieved thanks to their mapping on the AHB2 bus.

The I/Os alternate function configuration can be locked, if needed, following a specific sequence in order to avoid spurious writing to the I/Os registers.

3.12 Direct memory access controller (DMA)

The device embeds one DMA. Refer to *Table 9* for the features implementation.

Direct memory access (DMA) is used to provide high-speed data transfer between peripherals and memory as well as between memories. Data can be quickly moved by DMA without any CPU action. This keeps CPU resources free for other operations.

The DMA controller has seven channels in total, a full cross matrix allows any peripheral to be mapped on any of the available DMA channels. The DMA has an arbiter for handling the priority between DMA requests.

The DMA supports:

- seven independently configurable channels (requests)
- A full cross matrix between peripherals and all the DMA channels exist. There is also a HW trigger possibility through the DMAMUX.
- Priorities between requests from DMA channels are software programmable (four levels consisting in very high, high, medium and low) or hardware in case of equality (request 1 has priority over request 2, etc.).
- Independent source and destination transfer size (byte, half word, word), emulating packing and unpacking. Source/destination addresses must be aligned on the data size.
- Support for circular buffer management.
- Three event flags (DMA half transfer, DMA transfer complete and DMA transfer error) logically OR-ed together in a single interrupt request for each channel.
- Memory-to-memory transfer.
- Peripheral-to-memory and memory-to-peripheral, and peripheral-to-peripheral transfers.
- Access to Flash memory, SRAM, APB and AHB peripherals as source and destination.
- Programmable number of data to be transferred: up to 65536.

Table 9. DMA implementation

DMA features	DMA1
Number of regular channels	7

A DMAMUX block makes it possible to route any peripheral source to any DMA channel.

3.13 Interrupts and events

3.13.1 Nested vectored interrupt controller (NVIC)

The device embeds a nested vectored interrupt controller able to manage 16 priority levels, and handle up to 63 maskable interrupt channels plus the 16 interrupt lines of the Cortex®-M4 with FPU.

The NVIC benefits are the following:

- Closely coupled NVIC gives low latency interrupt processing
- Interrupt entry vector table address passed directly to the core
- Allows early processing of interrupts
- Processing of late arriving higher priority interrupts
- Support for tail chaining
- Processor state automatically saved
- Interrupt entry restored on interrupt exit with no instruction overhead

The NVIC hardware block provides flexible interrupt management features with minimal interrupt latency.

3.13.2 Extended interrupts and events controller (EXTI)

The EXTI manages wakeup through configurable and direct event inputs. It provides wake-up requests to the Power control, and generates interrupt requests to the CPUx NVIC and events to the CPUx event input.

Configurable events/interrupts come from peripherals able to generate a pulse, and make it possible to select the Event/Interrupt trigger edge and/or a SW trigger.

Direct events/interrupts are coming from peripherals having their own clearing mechanism.

3.14 Analog to digital converter (ADC)

The 12-bit analog-to-digital converter has up to ten external and three internal (temperature sensor, voltage reference, VBAT voltage measurement) channels and performs conversions in single-shot or scan modes. In scan mode, automatic conversion is performed on a selected group of analog inputs.

An analog watchdog feature makes possible a very precise monitoring of the converted voltage of one, some or all selected channels. An interrupt is generated when the converted voltage is outside the programmed thresholds.

3.14.1 Temperature sensor

The temperature sensor (TS) generates a voltage V_{TS} that varies linearly with temperature.

The temperature sensor is internally connected to the ADC1_IN12 input channel, which is used to convert the sensor output voltage into a digital value.

To improve the accuracy of the temperature sensor measurement, each device is individually factory-calibrated by ST. The temperature sensor factory calibration data are stored in the system memory area, accessible in read-only mode.

Table 10. Temperature sensor calibration values

Calibration value name	Description	Memory address
TS_CAL1	TS ADC raw data acquired at a temperature of 30 °C (± 5 °C), V_{DDA} = 3.0 V (± 10 mV)	0x1FFF 75A8 - 0x1FFF 75A9
TS_CAL2	TS ADC raw data acquired at a temperature of 130 °C (± 5 °C), V_{DDA} = 3.0 V (± 10 mV)	0x1FFF 75CA - 0x1FFF 75CB

3.14.2 Internal voltage reference (V_{REFINT})

The internal voltage reference (VREFINT) provides a stable (bandgap) voltage output for the ADC and the comparator. VREFINT is internally connected to the ADC1_IN13 input channel. The precise voltage of VREFINT is individually measured for each part by ST during production test and stored in the system memory area. It is accessible in read-only mode.

Table 11. Internal voltage reference calibration values

Calibration value name	Description	Memory address
VREFINT	Raw data acquired at a temperature of 30 °C (± 5 °C), V_{DDA} = 3.6 V (± 10 mV)	0x1FFF 75AA - 0x1FFF 75AB

3.15 Comparator (COMP)

The STM32WB15CC devices embeds a comparator with programmable reference voltage (internal or external), hysteresis and speed (low speed for low-power) and with selectable output polarity.

The reference voltage can be one of the following:

- External I/O
- Internal reference voltage or submultiple (1/4, 1/2, 3/4).

The comparator can wake up from Stop mode, generate interrupts and breaks for the timers and can be also combined into a window comparator.

3.16 Touch sensing controller (TSC)

The touch sensing controller provides a simple solution for adding capacitive sensing functionality to any application. Capacitive sensing technology is able to detect finger presence near an electrode which is protected from direct touch by a dielectric such as glass or plastic. The capacitive variation introduced by the finger (or any conductive object) is measured using a proven implementation based on a surface charge transfer acquisition principle.

The touch sensing controller is fully supported by the STMTouch touch sensing firmware library (free to use) and enables reliable touch sensing functionality in the end application.

The main features of the touch sensing controller are the following:

- Proven and robust surface charge transfer acquisition principle
- Supports up to three capacitive sensing channels
- Up to eight capacitive sensing channels can be acquired in parallel offering a very good response time
- Spread spectrum feature to improve system robustness in noisy environments
- Full hardware management of the charge transfer acquisition sequence
- Programmable charge transfer frequency
- Programmable sampling capacitor I/O pin
- Programmable channel I/O pin
- Programmable max count value to avoid long acquisition when a channel is faulty
- Dedicated end of acquisition and max count error flags with interrupt capability
- One sampling capacitor for up to three capacitive sensing channels to reduce the system components
- Compatible with proximity, touchkey, linear and rotary touch sensor implementation
- Designed to operate with STMTouch touch sensing firmware library

Note: The number of capacitive sensing channels is dependent upon the package and subject to I/O availability.

3.17 True random number generator (RNG)

The device embeds a true RNG that delivers 32-bit random numbers generated by an integrated analog circuit.

3.18 Timers and watchdogs

The STM32WB15CC includes one advanced 16-bit timer, one general-purpose 32-bit timer, two low-power timers, two watchdog timers and a SysTick timer. *Table 12* compares the features of the advanced control, general purpose and basic timers.

Table 12. Timer features

Timer type	Timer	Counter resolution	Counter type	Prescaler factor	DMA request generation	Capture/ compare channels	Complementary outputs
Advanced control	TIM1	16-bits	Up, down, Up/down	Any integer between 1 and 65536	Yes	4	3
General purpose	TIM2	32-bits	Up, down, Up/down			4	No
Low power	LPTIM1 LPTIM2	16-bits	Up			1	1

3.18.1 Advanced-control timer (TIM1)

The advanced-control timer can be seen as a three-phase PWM multiplexed on six channels. They have complementary PWM outputs with programmable inserted

dead-times. They can also be seen as complete general-purpose timers. The four independent channels can be used for:

- Input capture
- Output compare
- PWM generation (edge or center-aligned modes) with full modulation capability (0 to 100%)
- One-pulse mode output

In debug mode, the advanced-control timer counter can be frozen and the PWM outputs disabled to turn off any power switches driven by these outputs.

Many features are shared with those of the general-purpose TIMx timers (described in *Section 3.18.2*) using the same architecture, so the advanced-control timers can work together with the TIMx timers via the Timer Link feature for synchronization or event chaining.

3.18.2 General-purpose timer (TIM2)

There is one synchronizable general-purpose timer embedded in the STM32WB15CC (see *Table 12*), it can be used to generate PWM outputs, or act as a simple time base.

- TIM2
  - Full-featured general-purpose timer
  - Features four independent channels for input capture/output compare, PWM or one-pulse mode output. Can work together, or with the other general-purpose timers via the Timer Link feature for synchronization or event chaining.
  - The counter can be frozen in debug mode.
  - Independent DMA request generation, support of quadrature encoders.

3.18.3 Low-power timer (LPTIM1 and LPTIM2)

The device embeds two low-power timers, having an independent clock running in Stop mode if they are clocked by LSE, LSIx or by an external clock. They are able to wakeup the system from Stop mode.

LPTIM1 is active in Stop 0 and Stop 1 modes.

LPTIM2 is active in Stop 0 and Stop 1 modes.

The low-power timers support the following features:

- 16-bit up counter with 16-bit autoreload register
- 16-bit compare register
- Configurable output: pulse, PWM
- Continuous/ one shot mode
- Selectable software/hardware input trigger
- Selectable clock source
  - Internal clock sources: LSE, either LSI1 or LSI2, HSI16 or APB clock
  - External clock source over LPTIM input (working even with no internal clock source running, used by pulse counter application)
- Programmable digital glitch filter
- Encoder mode (LPTIM1 only)

3.18.4 Independent watchdog (IWDG)

The independent watchdog is based on a 12-bit downcounter and an 8-bit prescaler. It is clocked from an independent 32 kHz internal RC (LSI) and as it operates independently from the main clock, it can operate in Stop and Standby modes. It can be used either as a watchdog to reset the device when a problem occurs, or as a free running timer for application timeout management. It is hardware or software configurable through the option bytes. The counter can be frozen in debug mode.

3.18.5 System window watchdog (WWDG)

The window watchdog is based on a 7-bit downcounter that can be set as free running. It can be used as a watchdog to reset the device when a problem occurs. It is clocked from the main clock. It has an early warning interrupt capability and the counter can be frozen in debug mode.

3.18.6 SysTick timer

This timer is dedicated to real-time operating systems, but could also be used as a standard down counter. It features:

- a 24-bit down counter
- autoreload capability
- a maskable system interrupt generation when the counter reaches 0
- a programmable clock source.

3.19 Real-time clock (RTC) and backup registers

The RTC is an independent BCD timer/counter, supporting the following features:

- Calendar with subsecond, seconds, minutes, hours (12 or 24 format), week day, date, month, year, in BCD (binary-coded decimal) format.
- Automatic correction for 28, 29 (leap year), 30, and 31 days of the month.
- Two programmable alarms.
- On-the-fly correction from 1 to 32767 RTC clock pulses. This can be used to synchronize it with a master clock.
- Reference clock detection: a more precise second source clock (50 or 60 Hz) can be used to enhance the calendar precision.
- Digital calibration circuit with 0.95 ppm resolution, to compensate for quartz crystal inaccuracy.
- One anti-tamper detection pin with programmable filter.
- Timestamp feature, which can be used to save the calendar content. This function can be triggered by an event on the timestamp pin, or by a tamper event, or by a switch to VBAT mode.
- 17-bit auto-reload wakeup timer (WUT) for periodic events with programmable resolution and period.

The RTC and the 20 backup registers are supplied through a switch that takes power either from the V_{DD} supply (when present) or from the VBAT pin.

The backup registers are 32-bit registers used to store 80 bytes of user application data when V_{DD} power is not present. They are not reset by a system or power reset, or when the device wakes up from Standby or Shutdown mode.

The RTC clock sources can be:

- a 32.768 kHz external crystal (LSE)
- an external resonator or oscillator (LSE)
- one of the internal low power RC oscillators (LSI1 with typical frequency of 32 kHz or LSI2)
- the high-speed external clock (HSE) divided by 32.

The RTC is functional in VBAT mode and in all low-power modes when it is clocked by the LSE. When clocked by one of the LSIs, the RTC is not functional in VBAT mode, but is functional in all low-power modes except Shutdown mode.

All RTC events (alarm, wakeup timer, timestamp or tamper) can generate an interrupt and wakeup the device from the low-power modes.

3.20 Inter-integrated circuit interface (I2C)

The device embeds one I2C. Refer to *Table 13* for the features implementation.

The I^2C bus interface handles communications between the microcontroller and the serial I^2C bus. It controls all I^2C bus-specific sequencing, protocol, arbitration and timing.

The I2C peripheral supports:

- I^2C-bus specification and user manual rev. 5 compatibility:
  - Slave and master modes, multimaster capability
  - Standard-mode (Sm), with a bitrate up to 100 kbit/s
  - Fast-mode (Fm), with a bitrate up to 400 kbit/s
  - Fast-mode Plus (Fm+), with a bitrate up to 1 Mbit/s and 20 mA output drive I/Os
  - 7-bit and 10-bit addressing mode, multiple 7-bit slave addresses
  - Programmable setup and hold times
  - Optional clock stretching
- System Management Bus (SMBus) specification rev 2.0 compatibility:
  - Hardware PEC (packet error checking) generation and verification with ACK control
  - Address resolution protocol (ARP) support
  - SMBus alert
- Power System Management Protocol (PMBus™) specification rev 1.1 compatibility
- Independent clock: a choice of independent clock sources allowing the I2C communication speed to be independent from the PCLK reprogramming. Refer to *Figure 7: Clock tree*.
- Wakeup from Stop mode on address match
- Programmable analog and digital noise filters
- 1-byte buffer with DMA capability

Table 13. I2C implementation

I2C features[1]	I2C1
Standard-mode (up to 100 kbit/s)	X
Fast-mode (up to 400 kbit/s)	X
Fast-mode Plus with 20mA output drive I/Os (up to 1 Mbit/s)	X
Programmable analog and digital noise filters	X
SMBus/PMBus hardware support	X
Independent clock	X
Wakeup from Stop 0 / Stop 1 mode on address match	X

1. X: supported.

3.21 Universal synchronous/asynchronous receiver transmitter (USART)

The device embeds one universal synchronous receiver transmitter.

This interface provides asynchronous communication, IrDA SIR ENDEC support, multiprocessor communication mode, single-wire half-duplex communication mode and has LIN Master/Slave capability. It provides hardware management of the CTS and RTS signals, and RS485 driver enable.

The USART is able to communicate at speeds of up to 4 Mbit/s, and also provides Smart Card mode (ISO 7816 compliant) and SPI-like communication capability.

The USART supports synchronous operation (SPI mode), and can be used as an SPI master.

The USART has a clock domain independent from the CPU clock, allowing it to wake up the MCU from Stop mode using baudrates up to 200 kbaud. The wake up events from Stop mode are programmable and can be:

- the start bit detection
- any received data frame
- a specific programmed data frame.

The USART interface can be served by the DMA controller.

3.22 Low-power universal asynchronous receiver transmitter (LPUART)

The device embeds one Low-Power UART, enabling asynchronous serial communication with minimum power consumption. The LPUART supports half duplex single wire communication and modem operations (CTS/RTS), allowing multiprocessor communication.

The LPUART has a clock domain independent from the CPU clock, and can wakeup the system from Stop mode using baudrates up to 220 kbaud. The wake up events from Stop mode are programmable and can be:

- the start bit detection
- any received data frame
- a specific programmed data frame.

Only a 32.768 kHz clock (LSE) is needed for LPUART communication up to 9600 baud. Therefore, even in Stop mode, the LPUART can wait for an incoming frame while having an extremely low energy consumption. Higher speed clock can be used to reach higher baudrates.

The LPUART interfaces can be served by the DMA controller.

3.23 Serial peripheral interface (SPI1)

The SPI interface enables communication up to 32 Mbit/s in master and up to 24 Mbit/s in slave modes, in half-duplex, full-duplex and simplex modes. The 3-bit prescaler gives 8 master mode frequencies and the frame size is configurable from 4 bits to 16 bits. The SPI interface support NSS pulse mode, TI mode and Hardware CRC calculation.

The SPI interface can be served by the DMA controller.

3.24 Development support

3.24.1 Serial wire JTAG debug port (SWJ-DP)

The Arm® SWJ-DP interface is embedded, and is a combined JTAG and serial wire debug port that enables either a serial wire debug or a JTAG probe to be connected to the target.

Debug is performed using only two pins instead of the five required by the JTAG (JTAG pins can then be reused as GPIOs with alternate function): the JTAG TMS and TCK pins are shared with SWDIO and SWCLK, respectively, and a specific sequence on the TMS pin is used to switch between JTAG-DP and SW-DP.

4 Pinouts and pin description

Figure 8. STM32WB15CCU UFQFPN48 pinout (1) (2)

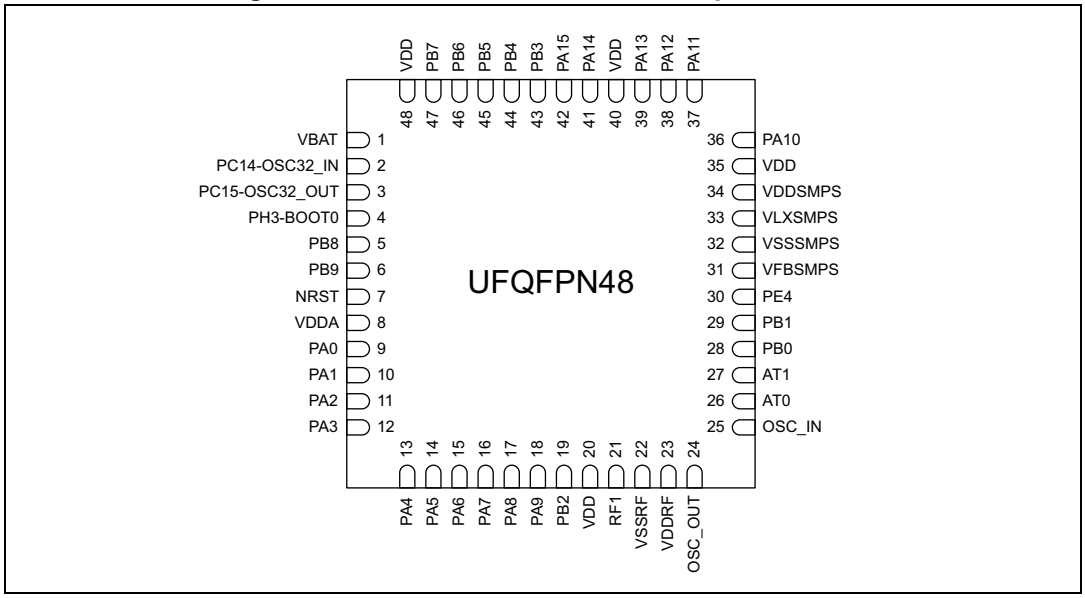

1. The above figure shows the package top view.
2. The exposed pad must be connected to ground plane.

Figure 9. STM32WB15CCU UFQFPN48E pinout (1) (2)

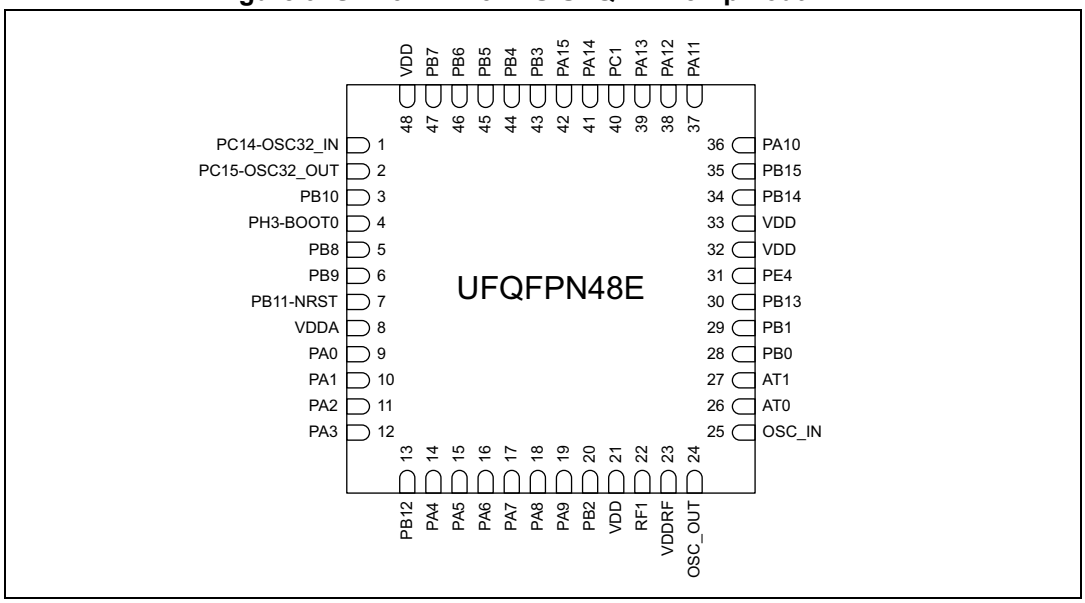

1. The above figure shows the package top view.
2. The exposed pad must be connected to ground plane.

Figure 10. STM32WB15CCY WLCSP49 pinout (1)

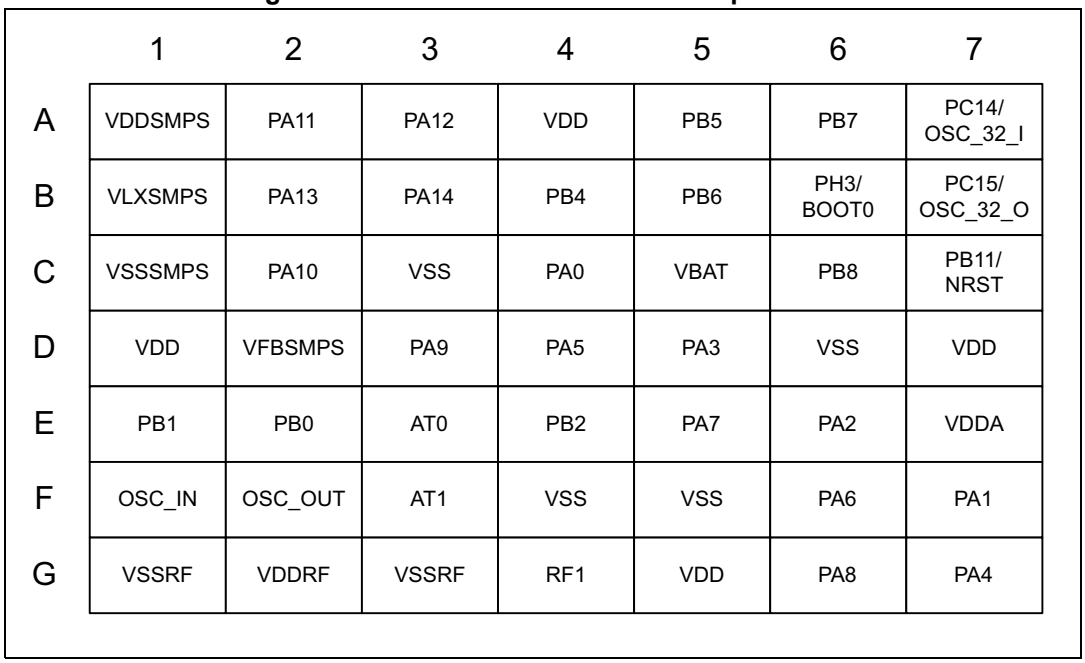

	1	2	3	4	5	6	7
A	VDDSMPS	PA11	PA12	VDD	PB5	PB7	PC14/ OSC_32_I
B	VLXSMPS	PA13	PA14	PB4	PB6	PH3/ BOOT0	PC15/ OSC_32_O
C	VSSSMPS	PA10	VSS	PA0	VBAT	PB8	PB11/ NRST
D	VDD	VFBSMPS	PA9	PA5	PA3	VSS	VDD
E	PB1	PB0	AT0	PB2	PA7	PA2	VDDA
F	OSC_IN	OSC_OUT	AT1	VSS	VSS	PA6	PA1
G	VSSRF	VDDRF	VSSRF	RF1	VDD	PA8	PA4

1. The above figure shows the package top view.

Table 14. Legend/abbreviations used in the pinout table

Name		Abbreviation	Definition
Pin name		Unless otherwise specified in brackets below the pin name, the pin function during and after reset is the same as the actual pin name	
Pin type		S	Supply pin
		I	Input only pin
		I/O	Input / output pin
I/O structure		FT	5 V tolerant I/O
		TT	3.6 V tolerant I/O
		RF	RF I/O
		RST	Bidirectional reset pin with weak pull-up resistor
		Option for TT or FT I/Os	
		_f (1)	I/O, Fm+ capable
		_a(2) (3)	I/O, with analog switch function supplied by V_{DDA}
Notes		Unless otherwise specified by a note, all I/Os are set as analog inputs during and after reset.	
Pin functions	Alternate functions	Functions selected through GPIOx_AFR registers	
	Additional functions	Functions directly selected/enabled through peripheral registers	

1. The related I/O structures in *Table 15* are FT_f and FT_fa.
2. The related I/O structures in *Table 15* are FT_a, FT_la, FT_fa and TT_a.
3. The analog switch for the TSC function is supplied by V_{DD}.

Table 15. STM32WB15CC pin definitions

Pin			Name (function after reset)	Type	I/O structures	Notes	Alternate functions	Additional functions
Number								
UFQFPN48	UFQFPN48E	WLCSP49						
1	-	C5	VBAT	S	-	-	-	-
-	-	D6	VSS	S	-	-	-	-
2	1	A7	PC14-OSC32_IN	I/O	FT	(1)	CM4_EVENTOUT	OSC32_IN
3	2	B7	PC15-OSC32_OUT	I/O	FT	(1)	CM4_EVENTOUT	OSC32_OUT
-	3	-	PB10	I/O	FT	-	TSC_G3_IO2, CM4_EVENTOUT	-
4	4	B6	PH3-BOOT0	I/O	FT	-	LSCO(2), CM4_EVENTOUT	-
5	5	C6	PB8	I/O	FT_f	-	TIM1_CH2N, I2C1_SCL, TSC_G7_IO3, CM4_EVENTOUT	-
-	-	C3	VSS	S	-	-	-	-
-	-	D7	VDD	S	-	-	-	-
6	6	-	PB9	I/O	FT_f	-	TIM1_CH3N, I2C1_SDA, TSC_G7_IO4, CM4_EVENTOUT	-
-	-	C3	VSS	S		-	-	-
7	7	C7	NRST(PB11)	I/O	FT	-	-	-
8	8	E7	VDDA	S	-	-	-	-
9	9	C4	PA0	I/O	FT_a	-	TIM2_CH1, COMP1_OUT, TIM2_ETR, CM4_EVENTOUT	COMP1_INM, ADC1_IN5, RTC_TAMP2/WKUP1
10	10	F7	PA1	I/O	FT_a	-	TIM2_CH2, I2C1_SMBA, SPI1_SCK, CM4_EVENTOUT	COMP1_INP, ADC1_IN6
11	11	E6	PA2	I/O	FT_a	-	LSCO(2), TIM2_CH3, LPUART1_TX, CM4_EVENTOUT	ADC1_IN7, WKUP4
12	12	D5	PA3	I/O	FT_a	-	TIM2_CH4, LPUART1_RX, CM4_EVENTOUT	ADC1_IN8
-	13	-	PB12	I/O	FT	-	TIM2_CH2, TSC_G1_IO1, CM4_EVENTOUT	-
-	-	C3	VSS	S	-	-	-	-
13	14	G7	PA4	I/O	FT_a	-	SPI1_NSS(boot), LPTIM2_OUT, CM4_EVENTOUT	COMP1_INM, ADC1_IN9
14	15	D4	PA5	I/O	FT_a	-	TIM2_CH1, TIM2_ETR, SPI1_MOSI, SPI1_SCK(boot), LPTIM2_ETR, CM4_EVENTOUT	COMP1_INM, ADC1_IN10

Table 15. STM32WB15CC pin definitions (continued)

Pin Number			Name (function after reset)	Type	I/O structures	Notes	Alternate functions	Additional functions
UFQFPN48	UFQFPN48E	WLCSP49						
15	16	F6	PA6	I/O	FT_a	-	TIM1_BKIN, SPI1_MISO(boot), LPUART1_CTS, CM4_EVENTOUT	ADC1_IN11
16	17	E5	PA7	I/O	FT_a	-	TIM1_CH1N, SPI1_MOSI(boot), CM4_EVENTOUT	ADC1_IN2
17	18	G6	PA8	I/O	FT_a	-	MCO, TIM1_CH1, USART1_CK, LPTIM2_OUT, CM4_EVENTOUT	ADC1_IN3
18	19	D3	PA9	I/O	FT_fa	-	TIM1_CH2, I2C1_SCL, USART1_TX(boot), CM4_EVENTOUT	COMP1_INM, ADC1_IN4
19	20	E4	PB2	I/O	FT_a	-	RTC_OUT, LPTIM1_OUT, SPI1_NSS, CM4_EVENTOUT	COMP1_INP
-	-	F5	VSS	S	-	-	-	-
20	21	G5	VDD	S	-	-	-	-
-	-	F4	VSSRF	S	-	-	-	-
21	22	G4	RF1	I/O	RF(3)	-	-	-
-	-	G1	VSSRF	S	-	-	-	-
-	-	G3	VSSRF	S	-	-	-	-
22	-	-	VSSRF		-	-	-	-
23	23	G2	VDDRF	S	-	-	-	-
24	24	F2	OSC_OUT	O	RF	(4)	-	-
25	25	F1	OSC_IN	I	RF	-	-	-
26	26	E3	AT0	I/O	RF	(5)	-	-
27	27	F3	AT1	I/O	RF	(5)	-	-
28	28	E2	PB0	I/O	TT	(6)	RF_TX_MOD_EXT_PA, COMP1_OUT, CM4_EVENTOUT	-
29	29	E1	PB1	I/O	TT	(6)	LPUART1_RTS_DE, LPTIM2_IN1, CM4_EVENTOUT	-
-	-	D1	VDD	S		-	-	-
-	30	-	PB13	I/O	FT	-	TIM2_CH3, TSC_G1_IO2, CM4_EVENTOUT	-
30	31	-	PE4	I/O	FT	-	CM4_EVENTOUT	-
31	-	D2	VFBSMPS	S	-	-	-	-
32	-	C1	VSSSMPS	S	-	-	-	-
33	-	B1	VLXSMPS	S	-	-	-	-

Table 15. STM32WB15CC pin definitions (continued)

Pin			Name (function after reset)	Type	I/O structures	Notes	Alternate functions	Additional functions
Number								
UFQFPN48	UFQFPN48E	WLCSP49						
34	-	A1	VDDSMPS	S	-	-	-	-
35	-	A4	VDD	S	-	-	-	-
-	34	-	PB14	I/O	FT	-	TIM1_CH1, CM4_EVENTOUT	-
-	35	-	PB15	I/O	FT	-	TIM2_CH1, CM4_EVENTOUT	-
36	36	C2	PA10	I/O	FT_f	-	TIM1_CH3, I2C1_SDA, USART1_RX(boot), TSC_G7_IO2, CM4_EVENTOUT	-
37	37	A2	PA11	I/O	FT	-	TIM1_CH4, TIM1_BKIN2, SPI1_MISO, USART1_CTS, CM4_EVENTOUT	-
38	38	A3	PA12	I/O	FT	-	TIM1_ETR, SPI1_MOSI, USART1_RTS, LPUART1_RX, CM4_EVENTOUT	-
39	39	B2	PA13	I/O	FT	(7) (8)	JTMS-SWDIO, SPI1_MOSI, TSC_G7_IO1, CM4_EVENTOUT	-
40	-	-	VDD	S	-	-	-	-
-	40	-	PC1	I/O	FT	-	TSC_G3_IO3, CM4_EVENTOUT	-
41	41	B3	PA14	I/O	FT	(7) (8)	JTCK-SWCLK, LPTIM1_OUT, I2C1_SMBA, SPI1_NSS, CM4_EVENTOUT	-
42	42	-	PA15	I/O	FT	(7)	JTDI, TIM2_CH1, TIM2_ETR, SPI1_NSS, MCO, TSC_G3_IO1, CM4_EVENTOUT	-
43	43	-	PB3	I/O	FT	-	JTDO-TRACESWO, TIM2_CH2, SPI1_SCK, USART1_RTS, CM4_EVENTOUT	-
44	44	B4	PB4	I/O	FT	(7)	NJTRST, SPI1_MISO, USART1_CTS, TSC_G2_IO1, CM4_EVENTOUT	-
45	45	A5	PB5(9)	I/O	FT	-	LPTIM1_IN1, I2C1_SMBA, SPI1_MOSI, USART1_CK, LPUART1_TX, TSC_G2_IO2, CM4_EVENTOUT	-
46	46	B5	PB6	I/O	FT_f	-	MCO, LPTIM1_ETR, I2C1_SCL(boot), SPI1_NSS, USART1_TX, TSC_G2_IO3, CM4_EVENTOUT	-
47	47	A6	PB7	I/O	FT_f	-	LPTIM1_IN2, TIM1_BKIN, I2C1_SDA(boot), USART1_RX, TSC_G2_IO4, TIM1_CH3, CM4_EVENTOUT	PVD_IN
48	48	-	VDD	S	-	-	-	-

Table 15. STM32WB15CC pin definitions (continued)

Pin Number			Name (function after reset)	Type	I/O structures	Notes	Alternate functions	Additional functions
UFQFPN48	UFQFPN48E	WLCSP49						
-	33	-	VDD	S	-	-	-	-
-	32	-	VDD	S	-	-	-	-

1. PC14 and PC15 are supplied through the power switch. As this switch only sinks a limited current (3 mA), the use of PC14 and PC15 GPIOs in output mode is limited:
   - the speed must not exceed 2 MHz with a maximum load of 30 pF
   - these GPIOs must not be used as current sources (e.g. to drive a LED).
   After a Backup domain power-up PC14 and PC15 operate as GPIOs. Their function depends on the content of the RTC registers not reset by the system reset. For details on how to manage these GPIOs, refer to the Backup domain and RTC register description in RM0473, available on *www.st.com*.
2. The clock on LSCO is available in Run and Stop modes, and on PA2 in Standby and Shutdown modes.
3. RF pin, use the nominal PCB layout.
4. 32 MHz oscillator pins, use the nominal PCB layout according to reference design (see AN5165 available on *www.st.com*).
5. Reserved for production, must be kept unconnected.
6. High frequency (above 32 KHz) may impact RF performance. Set output speed GPIOB_OSPEEDRy[1:0] to 00 (y = 0 and 1) during RF operation.
7. After reset, this pin is configured as JTAG/SW debug alternate function, and the internal pull-up on PA15, PA13 and PB4 pins and the internal pull-down on PA14 pin are activated.
8. On WLCSP49 package only serial-wire debug port is available (PA13 and PA14).
9. PB5 pin is configured as input with pull up active under reset if NRST pin is active (external or internal reset).

Table 16. Alternate functions

Port		AF0	AF1	AF2	AF3	AF4	AF5	AF6	AF7	AF8	AF9	AF12	AF14	AF15
		SYS_AF	LPTIM1/ TIM1/2	TIM1/2	TIM1	I2C1/ SPI1	SPI1	RF/ SYS_AF	USART1	LPUART1	TSC	COMP1/ TIM1	LPTIM2/ TIM2	EVENTOUT
A	PA0	-	TIM2_ CH1	-	-	-	-	-	-	-	-	COMP1_ OUT	TIM2_ ETR	CM4_ EVENTOUT
	PA1	-	TIM2_ CH2	-	-	I2C1_ SMBA	SPI1_SCK	-	-	-	-	-	-	CM4_ EVENTOUT
	PA2	LSCO	TIM2_ CH3	-	-	-	-	-	-	LPUART1_ TX	-	-	-	CM4_ EVENTOUT
	PA3	-	TIM2_ CH4	-	-	-	-	-	-	LPUART1_ RX	-	-	-	CM4_ EVENTOUT
	PA4	-	-	-	-		SPI1_NSS	-	-	-	-	-	LPTIM2_ OUT	CM4_ EVENTOUT
	PA5	-	TIM2_ CH1	TIM2_ ETR	-	SPI1_MOSI	SPI1_SCK	-	-	-	-	-	LPTIM2_ ETR	CM4_ EVENTOUT
	PA6	-	TIM1_ BKIN	-	-		SPI1_MISO	-	-	LPUART1_ CTS	-	-	-	CM4_ EVENTOUT
	PA7	-	TIM1_ CH1N	-	-	-	SPI1_MOSI	-	-	-	-	-	-	CM4_ EVENTOUT
	PA8	MCO	TIM1_ CH1	-	-	-	-	-	USART1_ CK	-	-	-	LPTIM2_ OUT	CM4_ EVENTOUT
	PA9	-	TIM1_ CH2	-	-	I2C1_ SCL	-	-	USART1_ TX	-	-	-	-	CM4_ EVENTOUT
	PA10	-	TIM1_ CH3	-	-	I2C1_ SDA	-	-	USART1_ RX	-	TSC_ G7_IO2	-	-	CM4_ EVENTOUT
	PA11	-	TIM1_ CH4	TIM1_ BKIN2	-	-	SPI1_MISO	-	USART1_ CTS	-	-	-	-	CM4_ EVENTOUT
	PA12	-	TIM1_ ETR	-	-	-	SPI1_MOSI	-	USART1_ RTS	LPUART1_ RX	-	-	-	CM4_ EVENTOUT
	PA13	JTMS-SWDIO	-	-	-	-	SPI1_MOSI	-	-	-	TSC_ G7_IO1	-	-	CM4_ EVENTOUT
	PA14	JTCK-SWCLK	LPTIM1_ OUT	-	-	I2C1_ SMBA	SPI1_NSS	-	-	-	-	-	-	CM4_ EVENTOUT
	PA15	JTDI	TIM2_ CH1	TIM2_ ETR	-		SPI1_NSS	MCO	-	-	TSC_ G3_IO1	-	-	CM4_ EVENTOUT

Table 16. Alternate functions (continued)

Port		AF0	AF1	AF2	AF3	AF4	AF5	AF6	AF7	AF8	AF9	AF12	AF14	AF15
		SYS_AF	LPTIM1/ TIM1/2	TIM1/2	TIM1	I2C1/ SPI1	SPI1	RF/ SYS_AF	USART1	LPUART1	TSC	COMP1/ TIM1	LPTIM2/ TIM2	EVENTOUT
B	PB0	-	-	-	-	-	-	RF_TX_ MOD_EXT_PA	-	-	-	COMP1_ OUT	-	CM4_ EVENTOUT
	PB1	-	-	-	-	-	-	-	-	LPUART1_ RTS_DE	-	-	LPTIM2_ IN1	CM4_ EVENTOUT
	PB2	RTC_ OUT	LPTIM1_ OUT	-	-	-	SPI1_NSS	-	-	-	-	-	-	CM4_ EVENTOUT
	PB3	JTDO-TRACE SWO	TIM2_ CH2	-	-	-	SPI1_SCK	-	USART1_ RTS_	-	-	-	-	CM4_ EVENTOUT
	PB4	NJTRST	-	-	-	-	SPI1_MISO	-	USART1_ CTS	-	TSC_ G2_IO1	-	-	CM4_ EVENTOUT
	PB5	-	LPTIM1_ IN1	-	-	I2C1_ SMBA	SPI1_MOSI	-	USART1_ CK	LPUART1_ TX	TSC_ G2_IO2	-	-	CM4_ EVENTOUT
	PB6	MCO	LPTIM1_ ETR	-	-	I2C1_ SCL	SPI1_NSS	-	USART1_ TX	-	TSC_ G2_IO3	-	-	CM4_ EVENTOUT
	PB7	-	LPTIM1_ IN2	-	TIM1_BKIN	I2C1_ SDA	-	-	USART1_ RX	-	TSC_ G2_IO4	TIM1_CH3	-	CM4_ EVENTOUT
	PB8	-	TIM1_ CH2N	-	-	I2C1_ SCL	-	-	-	-	TSC_ G7_IO3	-	-	CM4_ EVENTOUT
	PB9	-	TIM1_ CH3N	-	-	I2C1_ SDA	-	-	-	-	TSC_ G7_IO4	-	-	CM4_ EVENTOUT
	PB10			-	-	-	-	-	-	-	TSC_ G3_IO2	-	-	CM4_ EVENTOUT
	PB12		TIM2_ CH2	-	-	-	-	-	-	-	TSC_ G1_IO1	-	-	CM4_ EVENTOUT
	PB13		TIM2_ CH3	-	-	-	-	-	-	-	TSC_ G1_IO2	-	-	CM4_ EVENTOUT
	PB14		TIM1_ CH1	-	-	-	-	-	-	-	-	-	-	CM4_ EVENTOUT
	PB15		TIM2_ CH1	-	-	-	-	-	-	-	-	-	-	CM4_ EVENTOUT

Table 16. Alternate functions (continued)

Port		AF0	AF1	AF2	AF3	AF4	AF5	AF6	AF7	AF8	AF9	AF12	AF14	AF15
		SYS_AF	LPTIM1/ TIM1/2	TIM1/2	TIM1	I2C1/ SPI1	SPI1	RF/ SYS_AF	USART1	LPUART1	TSC	COMP1/ TIM1	LPTIM2/ TIM2	EVENTOUT
C	PC1	-	-	-	-	-	-	-	-	-	TSC_G3 _IO3	-	-	CM4_ EVENTOUT
	PC14	-	-	-	-	-	-	-	-	-	-	-	-	CM4_ EVENTOUT
	PC15	-	-	-	-	-	-	-	-	-	-	-	-	CM4_ EVENTOUT
E	PE4	-	-	-	-	-	-	-	-	-	-	-	-	CM4_ EVENTOUT
H	PH3	LSCO	-	-	-	-	-	-	-	-	-	-	-	CM4_ EVENTOUT

5 Memory mapping

The STM32WB15CC devices feature a single physical address space that can be accessed by the application processor and by the RF subsystem.

A part of the Flash memory and of the SRAM2a and SRAM2b memories are made secure, exclusively accessible by the CPU2, protected against execution, read and write from CPU1 and DMA.

In case of shared resources the SW has to implement arbitration mechanism to avoid access conflicts. This happens for peripherals Reset and clock controller (RCC), Power controller (PWC), EXTI and Flash interface, and can be implemented using the built-in semaphore block (HSEM).

By default the RF subsystem and CPU2 operate in secure mode. This implies that part of the Flash and of the SRAM2 memories can only be accessed by the RF subsystem and by the CPU2. In this case the Host processor (CPU1) has no access to these resources.

The detailed memory map and the peripheral mapping of the STM32WB15CC devices can be found in the reference manual RM0473.

6 Electrical characteristics

6.1 Parameter conditions

Unless otherwise specified, all voltages are referenced to V_{SS}.

6.1.1 Minimum and maximum values

Unless otherwise specified, the minimum and maximum values are guaranteed in the worst conditions of ambient temperature, supply voltage and frequencies by tests in production on 100% of the devices with an ambient temperature at T_A = 25 °C and T_A = $T_A$max (given by the selected temperature range).

Data based on characterization results, design simulation and/or technology characteristics are indicated in the table footnotes and are not tested in production. Based on characterization, the minimum and maximum values refer to sample tests and represent the mean value plus or minus three times the standard deviation (mean ± 3σ).

6.1.2 Typical values

Unless otherwise specified, typical data are based on V_{DD} = V_{DDA} = V_{DDRF} = 3 V, T_A = 25 °C. They are given only as design guidelines and are not tested.

Typical ADC accuracy values are determined by characterization of a batch of samples from a standard diffusion lot over the full temperature range, where 95% of the devices have an error less than or equal to the value indicated (mean ± 2σ).

6.1.3 Typical curves

Unless otherwise specified, all typical curves are given only as design guidelines and are not tested.

6.1.4 Loading capacitor

The loading conditions used for pin parameter measurement are shown in *Figure 11*.

6.1.5 Pin input voltage

The input voltage measurement on a pin of the device is described in *Figure 12*.

Figure 11. Pin loading conditions

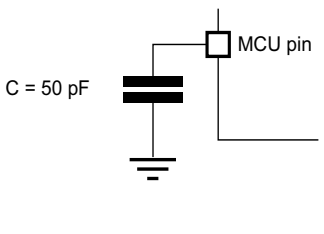

Figure 12. Pin input voltage

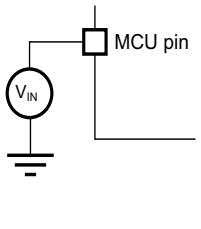

6.1.6 Power supply scheme

Figure 13. Power supply scheme

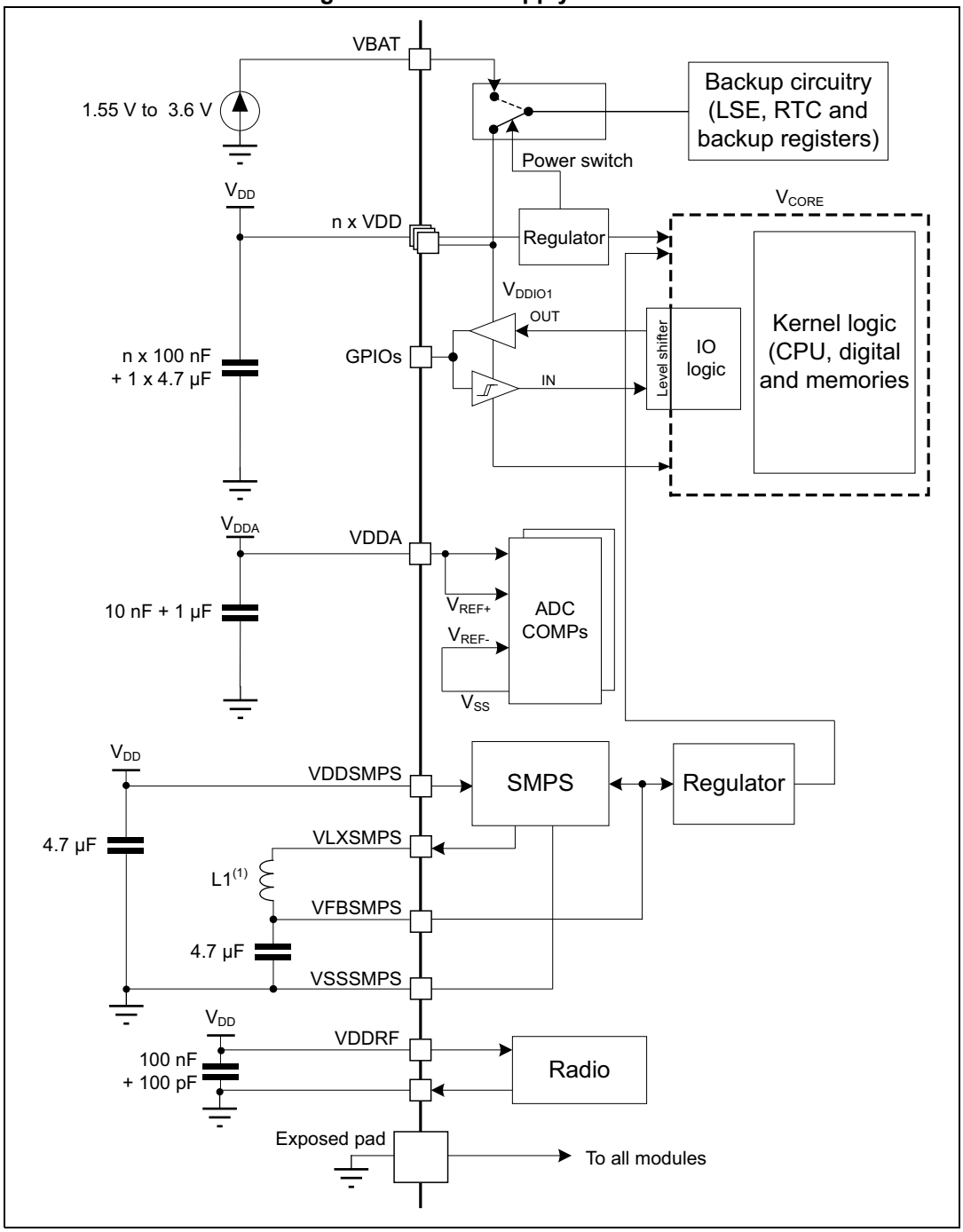

1. The value of L1 depends upon the frequency, as indicated in *Table 5: Power supply typical components*.

Caution: Each power supply pair (e.g. V_{DD} / V_{SS}, V_{DDRF} / V_{SSRF}) must be decoupled with filtering ceramic capacitors as shown in *Figure 13*. These capacitors must be placed as close as possible to (or below) the appropriate pins on the underside of the PCB to ensure the good functionality of the device.

6.1.7 Current consumption measurement

Figure 14. Current consumption measurement scheme

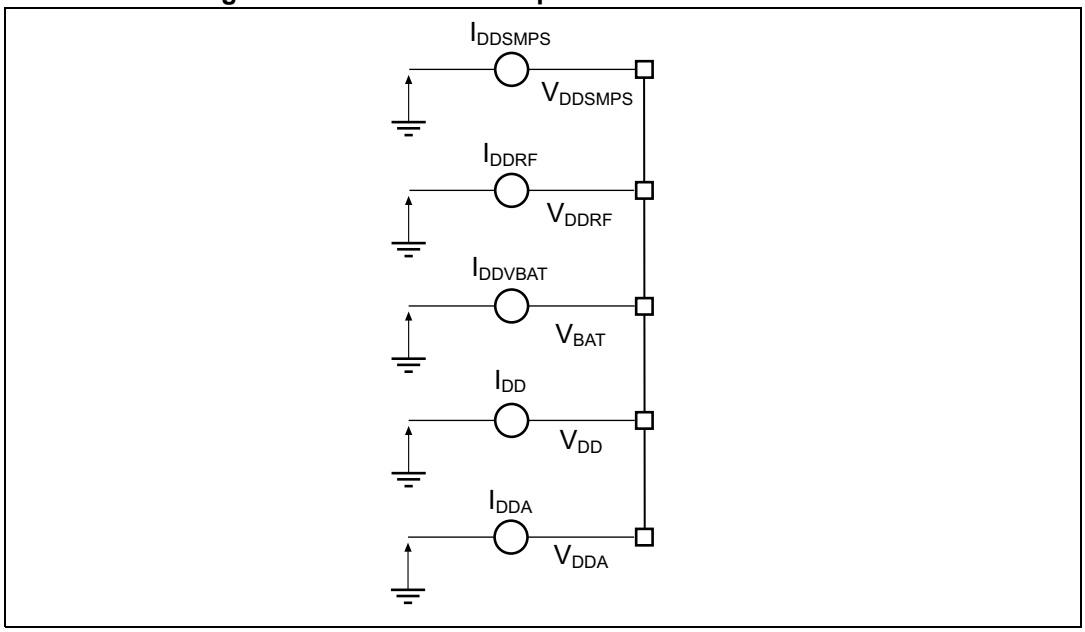

6.2 Absolute maximum ratings

Stresses above the absolute maximum ratings listed in *Table 17*, *Table 18* and *Table 19* may cause permanent damage to the device. These are stress ratings only and functional operation of the device at these conditions is not implied. Exposure to maximum rating conditions for extended periods may affect device reliability.

Device mission profile (application conditions) is compliant with JEDEC JESD47 Qualification standard, extended mission profiles are available on demand.

Table 17. Voltage characteristics(1)

Symbol	Ratings	Min	Max	Unit
V_{DDX} - V_{SS}	External main supply voltage (including V_{DD}, V_{DDA}, V_{DDRF},V_{DDSMPS}, V_{BAT})	-0.3	4.0	V
V_{IN}(2)	Input voltage on FT_xxx pins	V_{SS} - 0.3	min (V_{DD}, V_{DDA}, V_{DDRF}, V_{DDSMPS}) + 4.0(3)(4)	
	Input voltage on TT pins		4.0	
	Input voltage on any other pin		4.0	
$\lvert\Delta V_{DDx}\rvert$	Variations between different V_{DDX} power pins of the same domain	-	50	mV
$\lvert V_{SSx}-V_{SS}\rvert$	Variations between all the different ground pins	-	50	

1. All main power (V_{DD}, V_{DDRF}, V_{DDA}, V_{DDSMPS}, V_{BAT}) and ground (V_{SS}, V_{SSRF}, V_{SSSMPS}) pins must always be connected to the external power supply, in the permitted range.
2. V_{IN} maximum must always be respected. Refer to *Table 18* for the maximum allowed injected current values.

3. This formula has to be applied only on the power supplies related to the IO structure described in the pin definition table.
4. To sustain a voltage higher than 4 V the internal pull-up/pull-down resistors must be disabled.

Table 18. Current characteristics

Symbol	Ratings	Max	Unit
$\sum I_{VDD}$	Total current into sum of all V_{DD} power lines (source)(1)	130	mA
$\sum I_{VSS}$	Total current out of sum of all V_{SS} ground lines (sink)(1)	130	
$I_{VDD(PIN)}$	Maximum current into each V_{DD} power pin (source)(1)	100	
$I_{VSS(PIN)}$	Maximum current out of each V_{SS} ground pin (sink)(1)	100	
$I_{IO(PIN)}$	Output current sunk by any I/O and control pin except FT_f	20	
	Output current sunk by any FT_f pin	20	
	Output current sourced by any I/O and control pin	20	
$\sum I_{IO(PIN)}$	Total output current sunk by sum of all I/Os and control pins(2)	100	
	Total output current sourced by sum of all I/Os and control pins(2)	100	
$I_{INJ(PIN)}$(3)	Injected current on FT_xxx, TT and RST pins, except PB0 and PB1	–5 / +0(4)	
	Injected current on PB0 and PB1	-5 / 0	
$\sum \lvert I_{INJ(PIN)} \rvert$	Total injected current (sum of all I/Os and control pins)(5)	25	

1. All main power (V_{DD}, V_{DDRF}, V_{DDA}, V_{DDSMPS}, V_{BAT}) and ground (V_{SS}, $V_{SSRF\ and}$ V_{SSSMPS}) pins must always be connected to the external power supplies, in the permitted range.
2. This current consumption must be correctly distributed over all I/Os and control pins. The total output current must not be sunk/sourced between two consecutive power supply pins referring to high pin count packages.
3. Positive injection (when $V_{IN} > V_{DD}$) is not possible on these I/Os and does not occur for input voltages lower than the specified maximum value.
4. A negative injection is induced by $V_{IN} < V_{SS}$. $I_{INJ(PIN)}$ must never be exceeded. Refer to *Table 17: Voltage characteristics* for the maximum allowed input voltage values.
5. When several inputs are submitted to a current injection, the maximum $\sum \lvert I_{INJ(PIN)} \rvert$ is the absolute sum of the negative injected currents (instantaneous values).

Table 19. Thermal characteristics

Symbol	Ratings	Value	Unit
T_{STG}	Storage temperature range	–65 to +150	°C
T_J	Maximum junction temperature	130	

6.3 Operating conditions

6.3.1 Summary of main performance

Table 20. Main performance at V_{DD} = 3.3 V

Parameter			Test conditions	Typ	Unit
I_{CORE}	Core current consumption		VBAT (V_{BAT} = 1.8 V, V_{DD} = 0 V)	0.001	µA
			Shutdown (V_{DD} = 1.8 V)	0.012	
			Standby (V_{DD} = 1.8 V, 48 Kbytes RAM retention)	0.33	
			Sleep (16 MHz)	0.610	
			LP run (2 MHz)	190	
			Run (64 MHz)	4550	
			Radio RX(1)	4500	
			Radio TX 0 dBm output power(1)	5200	
I_{PERI}	Peripheral current consumption	BLE	Advertising(2) with Stop 1 and SMPS on (Tx = 0 dBm; period 1.28 s; 31 bytes, 3 channels)	14.7	
			Advertising(2) with Stop 1 and SMPS on (Tx = 0 dBm, 6 bytes; period 10.24 s, 3 channels)	5.0	
			Advertising(2) with Stop1 and LDO configuration (Tx = 0 dBm; period 1.28 s; 31 bytes, 3 channels)	19.2	
			Advertising(2) with Stop1 and LDO configuration (Tx = 0 dBm, 6 bytes; period 10.24 s, 3 channels)	6.0	
		LP timers	-	5.8	
		LPUART	-	8.1	
		RTC	-	1.75	

1. Power consumption including RF subsystem and digital processing.
2. Power consumption integrated over 300 s including Cortex-M4, RF subsystem, digital processing and Cortex M0+.

6.3.2 General operating conditions

Table 21. General operating conditions

Symbol	Parameter	Conditions	Min	Max	Unit
f_{HCLK}	Internal AHB clock frequency	-	0	64	MHz
f_{PCLK1}	Internal APB1 clock frequency	-			
f_{PCLK2}	Internal APB2 clock frequency	-			
V_{DD}	Standard operating voltage	-	1.71 (1) (2)	3.6	V
V_{DDA}	Analog supply voltage	ADC or COMP used	1.62		
		ADC, COMP not used	V_{DD}	V_{DD}	

Table 21. General operating conditions (continued)

Symbol	Parameter	Conditions	Min	Max	Unit
V_{BAT}	Backup operating voltage	-	1.55	3.6	
V_{FBSMPS}	SMPS feedback voltage	-	1.4		
V_{DDRF}	Minimum RF voltage	-	1.71		
V_{IN}	I/O input voltage	TT_xx I/O	–0.3	V_{DD} + 0.3	
		All I/O except TT_xx	–0.3	min (min (V_{DD}, V_{DDA}) + 3.6 V, 5.5 V)(3)(4)	
P_D	Power dissipation at T_A = 85 °C for suffix 6 version, or T_A = 105 °C for suffix 7 version	UFQFPN48	-	722	mW
		WLCSP49	-	439	
T_A	Ambient temperature for suffix 6 version	Maximum power dissipation	–40	85	°C
		Low-power dissipation(5)		105	
	Ambient temperature for suffix 7 version	Maximum power dissipation	-40	105	
		Low-power dissipation(5)		125	
T_J	Junction temperature range	Suffix 6 version	-40	105	
		Suffix 7 version		125	

1. When RESET is released functionality is guaranteed down to V_{BOR0} Min.
2. When V_{DDmin} is lower then 1.95 V, the SMPS operation mode is enabled by the BORH configuration to force SMPS bypass mode, or the SMPS is not enabled.
3. This formula has to be applied only on the power supplies related to the IO structure described by the pin definition table. Maximum I/O input voltage is the smallest value between min (V_{DD}, V_{DDA}) + 3.6 V and 5.5 V.
4. For operation with voltage higher than min (V_{DD}, V_{DDA}) + 0.3 V, the internal pull-up and pull-down resistors must be disabled.
5. In low-power dissipation state, T_A can be extended to this range as long as T_J does not exceed $T_J$max (see *Section 7.3: Thermal characteristics*).

6.3.3 RF BLE characteristics

RF characteristics are given at 1 Mbps, unless otherwise specified.

Table 22. RF transmitter BLE characteristics

Symbol	Parameter	Test conditions	Min	Typ	Max	Unit
F_{op}	Frequency operating range	-	2402	-	2480	MHz
F_{xtal}	Crystal frequency	-	-	32	-	
ΔF	Delta frequency	-	-	250	-	kHz
Rgfsk	On air data rate	-	-	1	2	Mbps
PLLres	RF channel spacing	-	-	2	-	MHz

Table 23. RF transmitter BLE characteristics (1 Mbps)(1)

Symbol	Parameter		Test conditions	Min	Typ	Max	Unit
P_{rf}	Maximum output power		SMPS Bypass (V_{DD} > 1.71 V) or ON (V_{FBSMPS} = 1.7 V and V_{DD} > 1.95 V)(2)	-	5.5	-	dBm
			SMPS Bypass or ON (V_{FBSMPS} = 1.4 V and V_{DD} > 1.71 V), Code 29(2)	-	3.6	-	
	0 dBm output power		-	-	0	-	
	Minimum output power		-	-	-20	-	
P_{band}	Output power variation over the band		Tx = 0 dBm - Typical	-0.5	-	0.4	dB
BWdB	6 dB signal bandwidth		Tx = max output power	-	670	-	kHz
IBSE	In band spurious emission	2 MHz	Bluetooth® Low Energy:-20 dBm	-	-50	-	dBm
		≥ 3 MHz	Bluetooth® Low Energy: -30 dBm	-	-53	-	
f_d	Frequency drift		Bluetooth® Low Energy: ±50 kHz	-50	-	+50	kHz
maxdr	Maximum drift rate		Bluetooth® Low Energy: ±20 kHz / 50 µs	-20	-	+20	kHz/ 50 µs
fo	Frequency offset		Bluetooth® Low Energy: ±150 kHz	-150	-	+150	kHz
Δf1	Frequency deviation average		Bluetooth® Low Energy: between 225 and 275 kHz	225	-	275	
Δfa	Frequency deviation Δf2 (average) / Δf1 (average)		Bluetooth® Low Energy:> 0.80	0.80	-	-	-
OBSE(3)	Out of band spurious emission	< 1 GHz	-	-	-62	-	dBm
		≥ 1 GHz	-	-	-45	-	

1. Measured in conducted mode, based on reference design (see AN5165), using output power specific external RF filter and impedance matching networks to interface with a 50 Ω antenna.
2. V_{FBSMPS} and V_{DD} must be set to different voltage levels, depending upon the desired TX signal (see AN5246 *Usage of SMPS on STM32WB Series microcontrollers*, available on *www.st.com*). Code 29 means Tx power (PA_Level) selection 29 (25 being 0 dbm).
3. Suitable for systems targeting compliance with worldwide radio-frequency regulations ETSI EN 300 328 and EN 300 440 Class 2 (Europe), FCC CFR47 Part 15 (US), and ARIB STD-T66 (Japan).

Table 24. RF transmitter BLE characteristics (2 Mbps)(1)

Symbol	Parameter	Test conditions	Min	Typ	Max	Unit
P_{rf}	Maximum output power	SMPS Bypass (V_{DD} > 1.71 V) or ON (V_{FBSMPS} = 1.7 V and V_{DD} > 1.95 V)(2)	-	5.5	-	dBm
		SMPS Bypass or ON (V_{FBSMPS} = 1.4 V and V_{DD} > 1.71 V), Code 29(2)	-	3.6	-	
	0 dBm output power	-	-	0	-	
	Minimum output power	-	-	-20	-	

Table 24. RF transmitter BLE characteristics (2 Mbps)(1) (continued)

Symbol	Parameter		Test conditions	Min	Typ	Max	Unit
P_{band}	Output power variation over the band		Tx = 0 dBm - Typical	-0.5	-	0.4	dB
BW6dB	6 dB signal bandwidth		Tx = maximum output power	-	670	-	kHz
IBSE	In band spurious emission	4 MHz	Bluetooth® Low Energy: -20 dBm	-	-55	-	dBm
		5 MHz	Bluetooth® Low Energy: -20 dBm	-	-55	-	
		≥ 6 MHz	Bluetooth® Low Energy: -30 dBm		-56		
f_d	Frequency drift		Bluetooth® Low Energy: ±50 kHz	-50	-	50	kHz
maxdr	Maximum drift rate		Bluetooth® Low Energy: ±20 kHz / 50 µs	-20	-	20	kHz/ 50 µs
fo	Frequency offset		Bluetooth® Low Energy: ±150 kHz	-150	-	150	kHz
Δf1	Frequency deviation average		Bluetooth® Low Energy: between 450 and 550 kHz	450	-	550	
Δfa	Frequency deviation Δf2 (average) / Δf1 (average)		Bluetooth® Low Energy:> 0.80	0.80	-	-	-
OBSE(3)	Out of band spurious emission	< 1 GHz	-	-	-62	-	dBm
		≥ 1 GHz	-	-	-45	-	

1. Measured in conducted mode, based on reference design (see AN5165), using output power specific external RF filter and impedance matching networks to interface with a 50 Ω antenna.
2. V_{FBSMPS} and V_{DD} must be set to different voltage levels, depending upon the desired TX signal (see AN5246 *Usage of SMPS on STM32WB Series microcontrollers*, available on *www.st.com*). Code 29 means Tx power (PA_Level) selection 29 (25 being 0 dbm).
3. Suitable for systems targeting compliance with worldwide radio-frequency regulations ETSI EN 300 328 and EN 300 440 Class 2 (Europe), FCC CFR47 Part 15 (US), and ARIB STD-T66 (Japan).

Table 25. RF receiver BLE characteristics (1 Mbps)

Symbol	Parameter	Test conditions	Typ	Unit
Prx_max	Maximum input signal	PER <30.8% Bluetooth® Low Energy: min -10 dBm	-4	dBm
Psens(1)	High sensitivity mode (SMPS Bypass)	PER <30.8% Bluetooth® Low Energy: max -70 dBm	-95.5	
	High sensitivity mode (SMPS ON)		-95	
$Rssi_{maxrange}$	RSSI maximum value	-	-7	
$Rssi_{minrange}$	RSSI minimum value	-	-94	
$Rssi_{accu}$	RSSI accuracy	-	2	dB
C/Ico	Co-channel rejection	Bluetooth® Low Energy: 21 dB	9	

Table 25. RF receiver BLE characteristics (1 Mbps) (continued)

Symbol	Parameter	Test conditions	Typ	Unit
C/I	Adjacent channel interference	Adj ≥ 5 MHz Bluetooth® Low Energy: -27 dB	-46	dB
		Adj ≤ -5 MHz Bluetooth® Low Energy:-27 dB	-48	
		Adj = 4 MHz Bluetooth® Low Energy:-27 dB	-46	
		Adj = -4 MHz Bluetooth® Low Energy:-15 dB	-33	
		Adj = 3 MHz Bluetooth® Low Energy:-27 dB	-46	
		Adj = 2 MHz Bluetooth® Low Energy:-17 dB	-39	
		Adj = -2 MHz Bluetooth® Low Energy:-15 dB	-35	
		Adj = 1 MHz Bluetooth® Low Energy: 15 dB	-2	
		Adj = -1 MHz Bluetooth® Low Energy: 15 dB	2	
C/Image	Image rejection (F_{image} = -3 MHz)	Bluetooth® Low Energy: -9 dB	-28	
P_IMD	Intermodulation	|f2-f1| = 3 MHz Bluetooth® Low Energy: -50 dBm	-36	dBm
		|f2-f1| = 4 MHz Bluetooth® Low Energy: -50 dBm	-35	
		|f2-f1| = 5 MHz Bluetooth® Low Energy:-50 dBm	-33	
P_OBB	Out of band blocking	30 to 2000 MHz Bluetooth® Low Energy: -30 dBm	-2	
		2003 to 2399 MHz Bluetooth® Low Energy: -35 dBm	-8	
		2484 to 2997 MHz Bluetooth® Low Energy: -35 dBm	-4	
		3 to 12.75 GHz Bluetooth® Low Energy: -30 dBm	6	

1. With ideal TX.

Table 26. RF receiver BLE characteristics (2 Mbps)

Symbol	Parameter	Test conditions	Typ	Unit
Prx_max	Maximum input signal	PER <30.8% Bluetooth® Low Energy: min -10 dBm	-4	dBm
Psens(1)	High sensitivity mode (SMPS Bypass)	PER <30.8% Bluetooth® Low Energy: max -70 dBm	-92.5	
	High sensitivity mode (SMPS ON)		-92.5	
$Rssi_{maxrange}$	RSSI maximum value	-	-7	
$Rssi_{minrange}$	RSSI minimum value	-	-94	
$Rssi_{accu}$	RSSI accuracy	-	2	dB
C/Ico	Co-channel rejection	Bluetooth® Low Energy: 21 dB	10	
C/I	Adjacent channel interference	Adj ≥ 8 MHz Bluetooth® Low Energy: -27 dB	-48	dB
		Adj ≤ -8 MHz Bluetooth® Low Energy: -27 dB	-44	
		Adj = 6 MHz Bluetooth® Low Energy: -27 dB	-48	
		Adj = -6 MHz Bluetooth® Low Energy: -15 dB	-46	
		Adj = 4 MHz Bluetooth® Low Energy: -17 dB	-42	
		Adj = 2 MHz Bluetooth® Low Energy: 15 dB	-3	
		Adj = -2 MHz Bluetooth® Low Energy: 15 dB	-3	
C/Image	Image rejection (F_{image} = -3 MHz)	Bluetooth® Low Energy: -9 dB	-26	
P_IMD	Intermodulation	|f2-f1| = 6 MHz Bluetooth® Low Energy: -50 dBm	-28	dBm
		|f2-f1| = 8 MHz Bluetooth® Low Energy: -50 dBm	-31	
		|f2-f1| = 10 MHz Bluetooth® Low Energy:-50 dBm	-30	
P_OBB	Out of band blocking	30 to 2000 MHz Bluetooth® Low Energy: -30 dBm	-3	
		2003 to 2399 MHz Bluetooth® Low Energy: -35 dBm	-12	
		2484 to 2997 MHz Bluetooth® Low Energy: -35 dBm	-7	
		3 to 12.75 GHz Bluetooth® Low Energy: -30 dBm	3	

1. With ideal TX.

Table 27. RF BLE power consumption for V_{DD} = 3.3 V(1)

Symbol	Parameter	Typ	Unit
I_{txmax}	TX maximum output power consumption (SMPS Bypass)	12.3	mA
	TX maximum output power consumption (SMPS On, V_{FBSMPS} = 1.7 V)	7.4	
I_{tx0dbm}	TX 0 dBm output power consumption (SMPS Bypass)	8.6	
	TX 0 dBm output power consumption (SMPS On, V_{FBSMPS} = 1.4 V)	5.2	
I_{rxlo}	Rx consumption (SMPS Bypass)	7.7	
	Rx consumption (SMPS On, V_{FBSMPS} = 1.4 V)	4.5	

1. Power consumption including RF subsystem and digital processing.

6.3.4 Operating conditions at power-up / power-down

The parameters given in *Table 28* are derived from tests performed under the ambient temperature condition summarized in *Table 21*.

Table 28. Operating conditions at power-up / power-down

Symbol	Parameter	Conditions	Min	Max	Unit
t_{VDD}	V_{DD} rise time rate	-	-	∞	µs/V
	V_{DD} fall time rate		10	∞	
t_{VDDA}	V_{DDA} rise time rate	-	0	∞	
	V_{DDA} fall time rate		10	∞	
t_{VDDRF}	V_{DDRF} rise time rate	-	-	∞	
	V_{DDRF} fall time rate		-	∞	

6.3.5 Embedded reset and power control block characteristics

The parameters given in *Table 29* are derived from tests performed under the ambient temperature conditions summarized in *Table 21: General operating conditions*.

Table 29. Embedded reset and power control block characteristics

Symbol	Parameter	Conditions[1]	Min	Typ	Max	Unit
$t_{RSTTEMPO}$[2]	Reset temporization after BOR0 is detected	V_{DD} rising	-	250	400	µs
V_{BOR0}[2]	Brown-out reset threshold 0	Rising edge	1.62	1.66	1.70	V
		Falling edge	1.60	1.64	1.69	
V_{BOR1}	Brown-out reset threshold 1	Rising edge	2.06	2.10	2.14	
		Falling edge	1.96	2.00	2.04	
V_{BOR2}	Brown-out reset threshold 2	Rising edge	2.26	2.31	2.35	
		Falling edge	2.16	2.20	2.24	
V_{BOR3}	Brown-out reset threshold 3	Rising edge	2.56	2.61	2.66	
		Falling edge	2.47	2.52	2.57	
V_{BOR4}	Brown-out reset threshold 4	Rising edge	2.85	2.90	2.95	
		Falling edge	2.76	2.81	2.86	
V_{PVD0}	Programmable voltage detector threshold 0	Rising edge	2.10	2.15	2.19	
		Falling edge	2.00	2.05	2.10	
V_{PVD1}	PVD threshold 1	Rising edge	2.26	2.31	2.36	
		Falling edge	2.15	2.20	2.25	
V_{PVD2}	PVD threshold 2	Rising edge	2.41	2.46	2.51	
		Falling edge	2.31	2.36	2.41	
V_{PVD3}	PVD threshold 3	Rising edge	2.56	2.61	2.66	V
		Falling edge	2.47	2.52	2.57	
V_{PVD4}	PVD threshold 4	Rising edge	2.69	2.74	2.79	
		Falling edge	2.59	2.64	2.69	
V_{PVD5}	PVD threshold 5	Rising edge	2.85	2.91	2.96	
		Falling edge	2.75	2.81	2.86	
V_{PVD6}	PVD threshold 6	Rising edge	2.92	2.98	3.04	
		Falling edge	2.84	2.90	2.96	
V_{hyst_BORH0}	Hysteresis voltage of BORH0	Hysteresis in continuous mode	-	20	-	mV
		Hysteresis in other mode	-	30	-	
$V_{hyst_BOR_PVD}$	Hysteresis voltage of BORH (except BORH0) and PVD	-	-	100	-	
I_{DD} (BOR_PVD)[2]	BOR[3] (except BOR0) and PVD consumption from V_{DD}	-	-	1.1	1.6	µA

Table 29. Embedded reset and power control block characteristics (continued)

Symbol	Parameter	Conditions[1]	Min	Typ	Max	Unit
V_{PVM3}	V_{DDA} peripheral voltage monitoring	Rising edge	1.61	1.65	1.69	V
		Falling edge	1.6	1.64	1.68	
V_{hyst_PVM3}	PVM3 hysteresis	-	-	10	-	mV
I_{DD} (PVM3)[2]	PVM3 consumption from V_{DD}	-	-	2	-	µA

1. Continuous mode means Run/Sleep modes, or temperature sensor enable in Low-power run/Low-power sleep modes.
2. Specified by design, not tested in production.
3. BOR0 is enabled in all modes (except Shutdown) and its consumption is therefore included in the supply current characteristics tables.

6.3.6 Embedded voltage reference

The parameters in *Table 30* are derived from tests performed under the ambient temperature and supply voltage conditions summarized in *Table 21: General operating conditions*.

Table 30. Embedded internal voltage reference

Symbol	Parameter	Conditions	Min	Typ	Max	Unit
V_{REFINT}	Internal reference voltage	–40 °C < T_J < +125 °C	1.182	1.212	1.232	V
$t_{S_vrefint}$ [1]	ADC sampling time when reading the internal reference voltage	-	4[2]	-	-	µs
$t_{start_vrefint}$	Start time of reference voltage buffer when ADC is enable	-	-	8	12[2]	
$I_{DD}(V_{REFINTBUF})$	V_{REFINT} buffer consumption from V_{DD} when converted by ADC	-	-	12.5	20[2]	µA
ΔV_{REFINT}	Internal reference voltage spread over the temperature range	V_{DD} = 3 V	-	5	7.5[2]	mV
T_{Coeff}	Temperature coefficient	–40 °C < T_J < +125 °C	-	30	50[2]	ppm/°C
A_{Coeff}	Long term stability	1000 hours, T_J = 25 °C	-	300	1000[2]	ppm
$V_{DDCoeff}$	Voltage coefficient	3.0 V < V_{DD} < 3.6 V	-	250	1200[2]	ppm/V
V_{REFINT_DIV1}	1/4 reference voltage	-	24	25	26	% V_{REFINT}
V_{REFINT_DIV2}	1/2 reference voltage		49	50	51	
V_{REFINT_DIV3}	3/4 reference voltage		74	75	76	

1. The shortest sampling time can be determined in the application by multiple iterations.
2. Specified by design, not tested in production.

Figure 15. V_{REFINT} vs. temperature

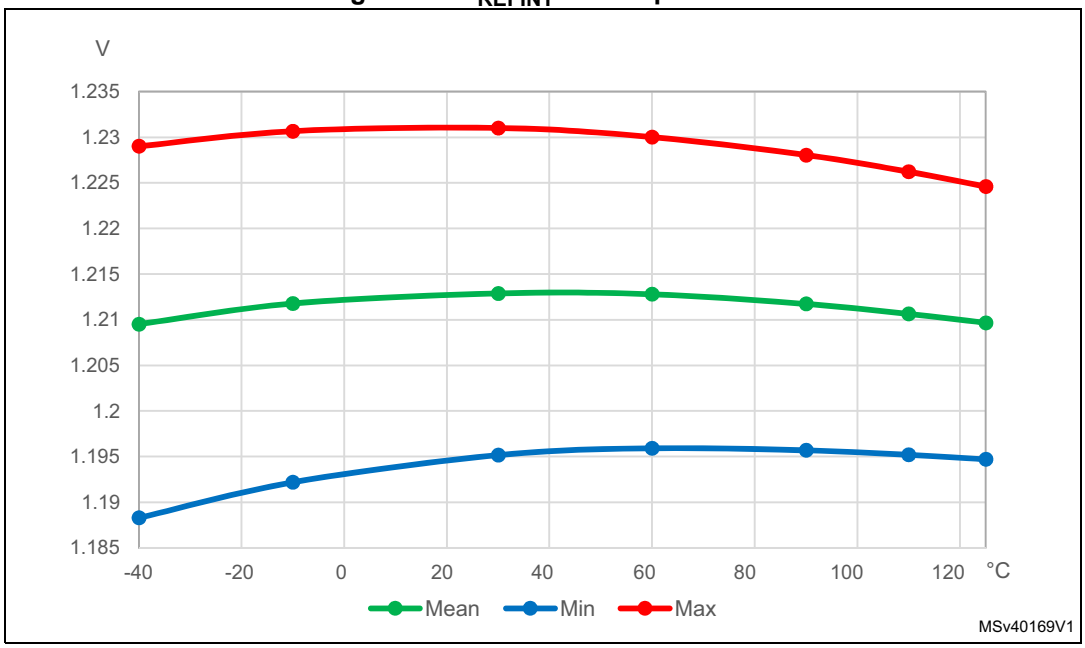

6.3.7 Supply current characteristics

The current consumption is a function of several parameters and factors such as the operating voltage, ambient temperature, I/O pin loading, device software configuration, operating frequencies, I/O pin switching rate, program location in memory and executed binary code.

The current consumption is measured as described in *Figure 14: Current consumption measurement scheme*.

Typical and maximum current consumption

The MCU is put under the following conditions:

- All I/O pins are in analog input mode
- All peripherals are disabled except when explicitly mentioned
- The Flash memory access time is adjusted with the minimum wait states number, depending on the f_{HCLK} frequency (refer to the table “Number of wait states according to CPU clock (HCLK) frequency” available in the RM0473 reference manual).
- When the peripherals are enabled $f_{PCLK} = f_{HCLK}$
- For Flash memory and shared peripherals $f_{PCLK} = f_{HCLK} = f_{HCLKS}$

The parameters given in *Table 31* to *Table 41* are derived from tests performed under ambient temperature and supply voltage conditions summarized in *Table 21: General operating conditions*.

Table 31. Current consumption in Run and Low-power run modes, code with data processing running from Flash memory, ART enable (Cache ON Prefetch OFF), V_{DD} = 3.3 V

Symbol	Parameter	Conditions			Typ				Max(1)			Unit
		-		f_{HCLK}	25 °C	55 °C	85 °C	105 °C	25 °C	85 °C	105 °C	
I_{DD}(Run)	Supply current in Run mode	$f_{HCLK} = f_{HSI16}$ up to 16 MHz included, $f_{HCLK} = f_{HSE}$ = 32 MHz f_{HSI16} + PLL ON above 32 MHz All peripherals disabled	-	64 MHz	6.35	6.40	6.45	6.50	7.25	7.37	7.57	mA
				32 MHz	3.25	3.30	3.35	3.40	3.29	3.53	3.78	
				16 MHz	1.75	1.75	1.80	1.85	2.06	2.18	2.46	
			SMPS	64 MHz	4.55	4.55	4.60	4.60	-	-	-	
				32 MHz	2.90	2.90	2.95	3.00	-	-	-	
				16 MHz	2.15	2.15	2.15	2.20	-	-	-	
I_{DD}(LPRun)	Supply current in Low-power run mode	$f_{HCLK} = f_{MSI}$ All peripherals disabled		2 MHz	0.190	0.205	0.235	0.285	0.270	0.460	0.630	
				1 MHz	0.105	0.115	0.145	0.195	0.170	0.320	0.490	
				400 kHz	0.0605	0.0905	0.140	0.008	0.230	0.390	0.390	
				100 kHz	0.024	0.034	0.0645	0.110	0.040	0.190	0.330	

1. Evaluated by characterization (mean ± 4 σ), not tested in production, unless otherwise specified.

Table 32. Current consumption in Run and Low-power run modes, code with data processing running from SRAM1, V_{DD} = 3.3 V

Symbol	Parameter	Conditions			Typ				Max(1)			Unit
		-		f_{HCLK}	25 °C	55 °C	85 °C	105 °C	25 °C	85 °C	105 °C	
I_{DD}(Run)	Supply current in Run mode	$f_{HCLK} = f_{HSI16}$ up to 16 MHz included, $f_{HCLK} = f_{HSE}$ = 32 MHz f_{HSI16} + PLL ON above 32 MHz All peripherals disabled	-	64 MHz	6.75	6.80	6.85	6.85	8.05	8.22	8.41	mA
				32 MHz	3.45	3.50	3.55	3.60	3.55	3.69	4.13	
				16 MHz	1.85	1.85	1.90	1.90	1.77	1.94	2.26	
			SMPS	64 MHz	4.75	4.75	4.75	4.80	-	-	-	
				32 MHz	3.00	3.00	3.05	3.10	-	-	-	
				16 MHz	2.20	2.20	2.25	2.25	-	-	-	
I_{DD}(LPRun)	Supply current in Low-power run mode	$f_{HCLK} = f_{MSI}$ All peripherals disabled		2 MHz	0.200	0.215	0.245	0.290	0.330	0.600	0.850	
				1 MHz	0.110	0.120	0.150	0.195	0.240	0.420	0.670	
				400 kHz	0.0525	0.0615	0.0905	0.135	0.160	0.310	0.520	
				100 kHz	0.024	0.034	0.0625	0.110	0.130	0.180	0.450	

1. Evaluated by characterization (mean ± 4 σ), not tested in production, unless otherwise specified.

Table 33. Typical current consumption in Run and Low-power run modes, with different codes running from Flash memory, ART enable (Cache ON Prefetch OFF), V_{DD}= 3.3 V

Symbol	Parameter	Conditions		Code	TYP 25 °C	Unit	TYP 25 °C	Unit
I_{DD}(Run)	Supply current in Run mode	$f_{HCLK} = f_{HSI16}$ up to 16 MHz included, f_{HSI16} + PLL ON above 32 MHz All peripherals disabled	f_{HCLK} = 64 MHz	Reduced code(1)	6.35	mA	99	µA/MHz
				Coremark	6.20		97	
				Dhrystone 2.1	6.75		105	
				Fibonacci	6.05		95	
				While(1)	5.85		91	
			SMPS ON, f_{HCLK} = 64 MHz	Reduced code(1)	4.55		71	
				Coremark	4.45		70	
				Dhrystone 2.1	4.75		74	
				Fibonacci	4.40		69	
				While(1)	4.30		67	
			SMPS ON, f_{HCLK} = 64 MHz, RF Tx level = 0 dBm(2)	Reduced code(1)	2.27		35	
				Coremark	2.22		34	
				Dhrystone 2.1	2.37		34	
				Fibonacci	2.19		34	
				While(1)	2.14		33	
I_{DD}(LPRun)	Supply current in Low-power run	$f_{HCLK} = f_{MSI}$ = 2 MHz All peripherals disabled		Reduced code(1)	190	µA	95	µA/MHz
				Coremark	190		95	
				Dhrystone 2.1	215		108	
				Fibonacci	185		93	
				While(1)	175		88	

1. Reduced code used for characterization results provided in *Table 31* and *Table 32*.
2. Value computed. MCU consumption when RF TX and SMPS are ON.

Table 34. Typical current consumption in Run and Low-power run modes, with different codes running from SRAM1, V_{DD} = 3.3 V

Symbol	Parameter	Conditions		Code	TYP 25 °C	Unit	TYP 25 °C	Unit
I_{DD}(Run)	Supply current in Run mode	$f_{HCLK} = f_{HSI16}$ up to 16 MHz included, f_{HSI16} + PLL ON above 32 MHz All peripherals disabled	f_{HCLK} = 64 MHz	Reduced code(1)	6.75	mA	105	µA/MHz
				Coremark	6.30		98	
				Dhrystone 2.1	6.20		97	
				Fibonacci	6.05		95	
				While(1)	6.20		98	
			SMPS ON, f_{HCLK} = 64 MHz	Reduced code(1)	4.75		74	
				Coremark	4.50		70	
				Dhrystone 2.1	4.50		70	
				Fibonacci	4.40		69	
				While(1)	4.50		70	
			SMPS ON, f_{HCLK} = 64 MHz, RF Tx level = 0 dBm(2)	Reduced code(1)	2.37		37	
				Coremark	2.24		35	
				Dhrystone 2.1	2.24		35	
				Fibonacci	2.19		34	
				While(1)	2.24		35	
I_{DD}(LPRun)	Supply current in Low-power run	$f_{HCLK} = f_{MSI}$ = 2 MHz All peripherals disabled		Reduced code(1)	200	µA	100	µA/MHz
				Coremark	190		95	
				Dhrystone 2.1	185		93	
				Fibonacci	180		90	
				While(1)	185		93	

1. Reduced code used for characterization results provided in *Table 31* and *Table 32*.
2. Value computed. MCU consumption when RF TX and SMPS are ON.

Table 35. Current consumption in Sleep and Low-power sleep modes, Flash memory ON

Symbol	Parameter	Conditions			TYP				MAX(1)			Unit
		All peripherals disabled		f_{HCLK}	25 °C	55 °C	85 °C	105 °C	25 °C	85 °C	105 °C	
I_{DD} (Sleep)	Supply current in Sleep mode,	$f_{HCLK} = f_{HSI16}$ up to 16 MHz included, $f_{HCLK} = f_{HSE}$ up to 32 MHz f_{HSI16} + PLL ON above 32 MHz	-	64 MHz	1.80	1.85	1.85	1.90	2.04	2.20	2.48	mA
				32 MHz	0.990	1.00	1.05	1.10	0.980	1.22	1.52	
				16 MHz	0.605	0.610	0.640	0.685	0.690	0.910	1.15	
			SMPS	64 MHz	2.30	2.30	2.30	2.35	-	-	-	
				32 MHz	1.80	1.80	1.80	1.85	-	-	-	
				16 MHz	1.60	1.60	1.60	1.65	-	-	-	
I_{DD} (LPSleep)	Supply current in Low-power sleep mode	$f_{HCLK} = f_{MSI}$		2 MHz	0.055	0.065	0.095	0.145	0.080	0.240	0.400	
				1 MHz	0.036	0.047	0.0765	0.125	0.060	0.210	0.360	
				400 kHz	0.022	0.033	0.0625	0.110	0.030	0.180	0.320	
				100 kHz	0.016	0.0265	0.057	0.105	0.030	0.170	0.320	

1. Evaluated by characterization (mean ± 4 σ), not tested in production, unless otherwise specified.

Table 36. Current consumption in Low-power sleep modes, Flash memory in Power down

Symbol	Parameter	Conditions		TYP				MAX(1)			Unit
		All peripherals disabled	f_{HCLK}	25 °C	55 °C	85 °C	105 °C	25 °C	85 °C	105 °C	
I_{DD} (LPSleep)	Supply current in low-power sleep mode	$f_{HCLK} = f_{MSI}$	2 MHz	55	66	96	145	79	291	520	µA
			1 MHz	37	47	77	125	62	252	480	
			400 kHz	22	33	63	110	36	225	436	
			100 kHz	17	27	57	105	34	219	432	

1. Evaluated by characterization (mean ± 4 σ), not tested in production, unless otherwise specified.

Table 37. Current consumption in Stop 1 mode

Symbol	Parameter	Conditions		TYP						MAX(1)				Unit
		-	V_{DD}	0 °C	25 °C	40 °C	55 °C	85 °C	105 °C	0 °C	25 °C	85 °C	105 °C	
I_{DD} (Stop 1)	Supply current in Stop 1 mode, RTC disabled	BLE disabled	1.8 V	1.90	3.05	7.35	9.95	31.5	64.0	2.6	9.4	112.8	225.1	µA
			2.4 V	1.85	3.05	5.50	10.0	31.0	64.5	-	-	-	-	
			3.0 V	1.85	3.05	5.55	10.0	31.5	65.5	2.5	9.3	112.6	227.3	
			3.6 V	1.90	3.10	5.65	10.0	32.0	67.0	2.6	9.4	115.2	233.5	
I_{DD} (Stop 1 with RTC)	Supply current in Stop 1 mode, RTC enabled, BLE disabled	RTC clocked by LSI	1.8 V	2.15	3.35	7.55	10.5	31.5	64.5	3.0	10.6	112.2	221.8	
			2.4 V	2.20	3.45	5.85	10.5	31.5	65.0	-	-	-	-	
			3.0 V	2.30	3.50	6.00	10.5	32.0	66.0	3.1	10.9	114.0	229.0	
			3.6 V	2.45	3.65	6.25	11.0	32.5	67.5	3.4	10.9	115.4	230.5	
		RTC clocked by LSE quartz(2) in Low drive mode	1.8 V	2.00	3.35	7.85	10.5	31.5	64.5	2.2	10.1	112.3	221.6	
			2.4 V	2.05	3.45	5.90	10.5	31.5	65.0	-	-	-	-	
			3.0 V	2.25	3.60	6.05	10.5	32.0	66.0	2.9	10.7	113.8	228.3	
			3.6 V	2.40	3.75	6.30	11.0	32.5	67.5	3.1	11.0	114.6	230.1	
I_{DD} (wakeup from Stop1)	Supply current during wakeup from Stop 1 bypass mode	Wakeup clock HSI16. See (3).	3.0 V	-	77	-	-	-	-	-	-	-	-	
		Wakeup clock MSI = 32 MHz. See (3).		-	54	-	-	-	-	-	-	-	-	

1. Evaluated based on characterization (mean ± 4 σ), not tested in production, unless otherwise specified.
2. Based on characterization done with a 32.768 kHz crystal (MC306-G-06Q-32.768, manufacturer JFVNY) with two 6.8 pF loading capacitors.
3. Wakeup with code execution from Flash memory. Average value given for a typical wakeup time as specified in *Table 44: Low-power mode wakeup timings*.

Table 38. Current consumption in Stop 0 mode

Symbol	Parameter	Conditions		TYP						MAX(1)				Unit
		-	V_{DD}	0 °C	25 °C	40 °C	55 °C	85 °C	105 °C	0 °C	25 °C	85 °C	105 °C	
I_{DD} (Stop 0)	Supply current in Stop 0 mode, RTC disabled, BLE disabled	--	1.8 V	97.5	100	105	110	140	180	112.3	114.2	328.9	499.9	µA
			2.4 V	99.5	100	105	115	140	180	-	-	-	-	
			3.0 V	100	105	110	115	140	180	119.1	134.3	331.5	495.0	
			3.6 V	100	105	110	115	145	185	165.0	135.7	358.2	511.1	
	Supply current during wakeup from Stop 0 Bypass mode	Wakeup clock HSI16. See (2).	3.0 V	-	217	-	-	-	-	-	-	-	-	
		Wakeup clock MSI = 32 MHz. See (2).		-	234	-	-	-	-	-	-	-	-	

1. Evaluated by characterization (mean ± 4 σ), not tested in production, unless otherwise specified.
2. Wakeup with code execution from Flash memory. Average value given for a typical wakeup time as specified in *Table 44: Low-power mode wakeup timings*.

Table 39. Current consumption in Standby mode

Symbol	Parameter	Conditions		TYP						MAX(1)				Unit
		-	V_{DD}	0 °C	25 °C	40 °C	55 °C	85 °C	105 °C	0 °C	25 °C	85 °C	105 °C	
I_{DD} (Standby)	Supply current in Standby mode (backup registers and SRAMs retained), RTC disabled	BLE disabled No independent watchdog	1.8 V	235	335	507	900	2900	6200	261	867	6599	14593	nA
			2.4 V	250	345	540	935	3000	6550	-	-	-	-	
			3.0 V	255	355	565	985	3150	6950	334	907	6959	15509	
			3.6 V	280	390	625	1050	3400	7600	373	989	7270	16213	
		BLE disabled with independent watchdog	1.8 V	415	515	677	1100	3100	6350	814	1074	24	14741	
			2.4 V	465	565	765	1150	3200	6750	-	-	-	-	
			3.0 V	520	625	840	1250	3400	7250	1309	1169	7188	15832	
			3.6 V	595	715	950	1400	3750	7900	1716	1259	7630	16403	

Table 39. Current consumption in Standby mode (continued)

Symbol	Parameter	Conditions		TYP						MAX(1)				Unit
		-	V_{DD}	0 °C	25 °C	40 °C	55 °C	85 °C	105 °C	0 °C	25 °C	85 °C	105 °C	
I_{DD} (Standby with RTC)	Supply current in Standby mode (backup registers and SRAMs retained), RTC enabled BLE disabled	RTC clocked by LSI, no independent watchdog	1.8 V	515	610	791	1200	3150	6450	700	1184	6933	15007	nA
			2.4 V	600	700	900	1300	3350	6900	-	-	-	-	
			3.0 V	700	800	1000	1450	3600	7400	898	1419	8182	16026	
			3.6 V	815	935	1150	1600	3950	8100	995	1569	604	16995	
		RTC clocked by LSI, with independent watchdog	1.8 V	550	650	830	1200	3200	6500	715	1187	6986	14984	
			2.4 V	650	750	950	1350	3400	6950	-	-	-	-	
			3.0 V	765	865	1100	1500	3650	7500	1085	1487	7358	16358	
			3.6 V	905	1000	1250	1700	4050	8200	1190	1641	8042	17295	
		RTC clocked by LSE quartz (2) in low drive mode	1.8 V	545	655	920	1250	3250	6550	623	1112	6958	14936	
			2.4 V	645	755	955	1350	3400	7000	-	-	-	-	
			3.0 V	760	875	1100	1500	3700	7550	588	1094	7332	16285	
			3.6 V	920	1050	1300	1750	4100	8300	738	1171	7757	17377	
I_{DD} (SRAM)(3)	Supply current to be subtracted in Standby mode when SRAM is not retained	-	1.8 V	79.0	92.0	130	215	730	1750	-	-	-	-	nA
			2.4 V	85.0	100	145	240	850	2050	-	-	-	-	
			3.0 V	95.0	110	165	285	1000	2450	-	-	-	-	
			3.6 V	115	150	220	370	1250	3000	-	-	-	-	
I_{DD} (wakeup from Standby)	Supply current during wakeup from Standby mode	Wakeup clock is HSI16. See (4)	3.0 V	-	0.5	-	-	-	-	-	-	-	-	mA

1. Evaluated by characterization (mean ± 4 σ), not tested in production, unless otherwise specified.
2. Based on characterization done with a 32.768 kHz crystal (MC306-G-06Q-32.768, manufacturer JFVNY) with two 6.8 pF loading capacitors.
3. The supply current in Standby with SRAMs mode is I_{DD}(Standby) + I_{DD}(SRAMs). The supply current in Standby with RTC with SRAM mode is I_{DD} (Standby + RTC) + I_{DD}(SRAM).
4. Wakeup with code execution from Flash memory. Average value given for a typical wakeup time as specified in *Table 44*.

Table 40. Current consumption in Shutdown mode

Symbol	Parameter	Conditions		TYP						MAX(1)				Unit
		-	V_{DD}	0 °C	25 °C	40 °C	55 °C	85 °C	105 °C	0 °C	25 °C	85 °C	105 °C	
I_{DD} (Shutdown)	Supply current in Shutdown mode (backup registers retained) RTC disabled	-	1.8 V	5.00	12.0	31.0	74.0	365	990	-	-	1207	3148	nA
			2.4 V	10.0	18.0	41.0	93.0	440	1200	-	-	-	-	
			3.0 V	16.0	28.0	58.0	125	560	1500	-	140	1495	3874	
			3.6 V	34.0	54.0	99.0	190	745	1900	-	143	1788	4339	
I_{DD} (Shutdown with RTC)	Supply current in Shutdown mode (backup registers retained) RTC enabled	RTC clocked by LSE quartz (2) in low drive mode	1.8 V	310	330	355	405	710	1350	-	2295	1948	3627	
			2.4 V	405	425	455	515	875	1650	-	-	-	-	
			3.0 V	525	550	585	660	1100	2050	-	2310	2193	4635	
			3.6 V	680	710	760	860	1450	2600	-	2283	2704	5463	

1. Evaluated by characterization (mean ± 4 σ), not tested in production, unless otherwise specified.
2. Based on characterization done with a 32.768 kHz crystal (MC306-G-06Q-32.768, manufacturer JFVNY) with two 6.8 pF loading capacitors.

Table 41. Current consumption in VBAT mode

Symbol	Parameter	Conditions		TYP						MAX(1)						Unit
		-	V_{BAT}	0 °C	25 °C	40 °C	55 °C	85 °C	105 °C	0 °C	25 °C	40 °C	55 °C	85 °C	105 °C	
I_{DD} (VBAT)	Backup domain supply current	RTC disabled	1.8 V	1.00	1.00	4.00	11.0	54.0	145	-	-	-	-	-	-	nA
			2.4 V	1.00	2.00	5.00	13.0	62.0	165	-	-	-	-	-	-	
			3.0 V	1.00	3.00	8.00	19.0	88.0	245	-	-	-	-	-	-	
			3.6 V	2.00	6.00	15.0	33.0	145	375	-	-	-	-	-	-	
		RTC enabled and clocked by LSE quartz(2)	1.8 V	200	210	220	235	290	385	-	-	-	-	-	-	
			2.4 V	250	265	275	285	350	460	-	-	-	-	-	-	
			3.0 V	315	330	340	360	440	605	-	-	-	-	-	-	
			3.6 V	405	415	430	455	580	820	-	-	-	-	-	-	

1. Evaluated by characterization (mean ± 4 σ), not tested in production, unless otherwise specified.
2. Based on characterization done with a 32.768 kHz crystal (MC306-G-06Q-32.768, manufacturer JFVNY) with two 6.8 pF loading capacitors.

Table 42. Current under Reset condition

Symbol	Conditions	TYP						MAX(1)						Unit
		0 °C	25 °C	40 °C	55 °C	85 °C	105 °C	0 °C	25 °C	40 °C	55 °C	85 °C	105 °C	
$I_{DD(RST)}$	1.8 V	310	315	320	330	365	420	-	-	-	-	-	-	µA
	2.4 V	330	335	345	350	385	445	-	-	-	-	-	-	
	3.0 V	350	355	365	370	410	465	-	484	-	-	-	-	
	3.6 V	370	375	385	390	430	485	-	-	-	-	-	-	

1. Evaluated by characterization, not tested in production, unless otherwise specified.

I/O system current consumption

The current consumption of the I/O system has two components: static and dynamic.

I/O static current consumption

All the I/Os used as inputs with pull-up generate current consumption when the pin is externally held low. The value of this current consumption can be simply computed by using the pull-up/pull-down resistors values given in *Table 64: I/O static characteristics*.

For the output pins, any external pull-down or external load must also be considered to estimate the current consumption.

Additional I/O current consumption is due to I/Os configured as inputs if an intermediate voltage level is externally applied. This current consumption is caused by the input Schmitt trigger circuits used to discriminate the input value. Unless this specific configuration is required by the application, this supply current consumption can be avoided by configuring these I/Os in analog mode. This is notably the case of ADC input pins which should be configured as analog inputs.

Caution: Any floating input pin can also settle to an intermediate voltage level or switch inadvertently, as a result of external electromagnetic noise. To avoid current consumption related to floating pins, they must either be configured in analog mode, or forced internally to a definite digital value. This can be done either by using pull-up/down resistors or by configuring the pins in output mode.

I/O dynamic current consumption

In addition to the internal peripheral current consumption measured previously (see *Table 43*) the I/Os used by the application also contribute to the current consumption.

When an I/O pin switches, it uses the current from the I/O supply voltage to supply the I/O pin circuitry and to charge/discharge the capacitive load (internal or external) connected to the pin:

$$I_{SW} = V_{DD} \times f_{SW} \times C$$

where

- I_{SW} is the current sunk by a switching I/O to charge/discharge the capacitive load
- V_{DD} is the I/O supply voltage
- f_{SW} is the I/O switching frequency
- C is the total capacitance seen by the I/O pin: $C = C_{I/O} + C_{EXT}$
- $C_{I/O}$ is the I/O pin capacitance
- C_{EXT} is the PCB board capacitance plus any connected external device pin capacitance.

The test pin is configured in push-pull output mode and is toggled by software at a fixed frequency.

On-chip peripheral current consumption

The current consumption of the on-chip peripherals is given in *Table 43*. The MCU is placed under the following conditions:

- All I/O pins are in Analog mode
- The given value is measured as the difference of the current consumptions when the peripheral is clocked on and when it is clocked off
- Ambient operating temperature and supply voltage conditions summarized in *Table 17: Voltage characteristics*
- The power consumption of the digital part of the on-chip peripherals is given in *Table 43*. The power consumption of the analog part of the peripherals (where applicable) is indicated in each related section of the datasheet.

Table 43. Peripheral current consumption

Peripheral		Run	Low-power run and Sleep	Unit
AHB1	Bus Matrix(1)	2.10	1.70	µA/MHz
	TSC	0.940	0.900	
	CRC	0.400	0.380	
	DMA1	1.70	1.60	
	DMAMUX	1.90	1.80	
	All AHB1 peripherals	5.30	5.00	
AHB2(2)	All AHB2 peripherals	1.70	1.70	
AHB Shared	TRNG independent clock domain	2.35	NA	
	TRNG clock domain	1.55	NA	
	SRAM2	1.35	1.25	
	FLASH	7.05	6.70	
	AES2	5.30	5.45	
	PKA	2.80	2.70	
	All AHB shared peripherals	14.5	15.5	

Table 43. Peripheral current consumption (continued)

Peripheral		Run	Low-power run and Sleep	Unit
APB1	RTCA	0.940	0.875	µA/MHz
	I2C1 independent clock domain	1.95	3.90	
	I2C1 clock domain	3.75	4.10	
	LPTIM1 independent clock domain	1.95	2.90	
	LPTIM1 clock domain	3.45	3.60	
	TIM2	4.55	4.00	
	LPTIM2 clock domain	3.45	3.70	
	LPTIM2 independent clock domain	1.95	2.90	
	WWDG	0.350	0.625	
	LPUART1 independent clock domain	2.60	3.70	
	LPUART1 clock domain	4.55	4.05	
	All APB1 peripherals	15.5	16.0	
APB2	AHB to APB2(3)	0.900	1.10	
	TIM1	6.25	6.10	
	USART1 independent clock domain	3.05	6.50	
	USART1 clock domain	6.25	5.50	
	SPI1	1.25	1.05	
	ADC1 independent clock domain	0.940	0.600	
	ADC1 clock domain	0.780	0.600	
	All APB2 on	14.5	15.5	
ALL		51.5	48.0	

1. The BusMatrix is automatically active when at least one master is ON (CPU, DMA).
2. GPIOs consumption during read and write accesses.
3. The AHB to APB2 bridge is automatically active when at least one peripheral is ON on the APB2.

6.3.8 Wakeup time from Low-power modes and voltage scaling transition times

The wakeup times given in *Table 44* are the latency between the event and the execution of the first user instruction.

The device goes in Low-power mode after the WFE (Wait For Event) instruction.

Table 44. Low-power mode wakeup timings(1)

Symbol	Parameter	Conditions		Typ	Max	Unit
$t_{WUSLEEP}$	Wakeup time from Sleep mode to Run mode	-		9	10	No. of CPU cycles
$t_{WULPSLEEP}$	Wakeup time from Low-power sleep mode to Low-power run mode	Wakeup in Flash with memory in power-down during low-power sleep mode (FPDS = 1 in PWR_CR1) and with clock MSI = 2 MHz		9	10	
$t_{WUSTOP0}$	Wake up time from Stop 0 mode to Run mode in Flash memory	-	Wakeup clock MSI = 32 MHz	2.38	2.96	µs
			Wakeup clock HSI16 = 16 MHz	1.69	2.00	
	Wake up time from Stop 0 mode to Run mode in SRAM1		Wakeup clock MSI = 32 MHz	2.63	3.00	
			Wakeup clock HSI16 = 16 MHz	1.80	2.00	
$t_{WUSTOP1}$	Wake up time from Stop 1 mode to Run in Flash memory		Wakeup clock MSI = 32 MHz	4.67	5.56	
			Wakeup clock HSI16 = 16 MHz	5.09	6.03	
	Wake up time from Stop 1 mode to Run in SRAM1		Wakeup clock MSI = 32 MHz	4.88	5.55	
			Wakeup clock HSI16 = 16 MHz	5.29	5.95	
	Wake up time from Stop 1 mode to Low-power run mode in Flash memory	Regulator in Low-power mode (LPR = 1 in PWR_CR1)	Wakeup clock MSI = 4 MHz	7.96	9.59	
	Wake up time from Stop 1 mode to Low-power run mode in SRAM1			8.00	9.47	
t_{WUSTBY}	Wakeup time from Standby mode to Run mode	-	Wakeup clock HSI16 = 16 MHz	51.0	58.1	

1. Evaluated by characterization (V_{DD} = 3 V, T = 25 °C), not tested in production.

Table 45. Regulator modes transition times(1)

Symbol	Parameter	Conditions	Typ	Max	Unit
$t_{WULPRUN}$	Wakeup time from Low-power run mode to Run mode(2)	Code run with MSI 2 MHz	15.33	16.30	µs

1. Evaluated by characterization (V_{DD} = 3 V, T = 25 °C), not tested in production.
2. Time until REGLPF flag is cleared in PWR_SR2.

Table 46. Wakeup time using USART / LPUART(1)

Symbol	Parameter	Conditions	Typ	Max	Unit
$t_{WUUSART}$ $t_{WULPPUART}$	Wakeup time needed to calculate the maximum USART / LPUART baud rate allowing to wakeup up from Stop mode when USART / LPUART clock source is HSI16	Stop mode 0	-	1.7	µs
		Stop mode 1	-	8.5	

1. Specified by design, not tested in production.

6.3.9 External clock source characteristics

High-speed external user clock generated from an external source

The high-speed external (HSE) clock is supplied with a 32 MHz crystal oscillator, or a sine or square wave.

The STM32WB15CC include internal programmable capacitances that can be used to tune the crystal frequency in order to compensate the PCB parasitic one.

The characteristics in *Table 47* and *Table 49* are measured over recommended operating conditions, unless otherwise specified. Typical values are referred to T_A = 25 °C and V_{DD} = 3.0 V.

Table 47. HSE crystal requirements(1)

Symbol	Parameter	Conditions	Min	Typ	Max	Unit
f_{NOM}	Oscillator frequency	-	-	32	-	MHz
f_{TOL}	Frequency tolerance	Includes initial accuracy, stability over temperature, aging and frequency pulling due to incorrect load capacitance.	-	-	50	ppm
C_L	Load capacitance	-	6	-	8	pF
ESR	Equivalent series resistance	-	-	-	100	Ω

1. 32 MHz XTAL is specified for two specific references: NX2016SA and NX1612SA.

Table 48. HSE clock source requirements(1)

Symbol	Parameter	Conditions	Min	Typ	Max	Unit
f_{HSE_ext}	User external clock source frequency	-		32	-	MHz
f_{TOL}	Frequency tolerance	Includes initial accuracy, stability over temperature and aging.	-	-	50	ppm
V_{HSE}	Clock input voltage limits	Sine or square wave, AC-coupled(2)	0.4	-	1.6	V_{PP}
t_r, t_r	Rise and fall times	10% - 90%, square wave	-	-	15*V_{PP}	ns
DuCy(HSE)	Duty cycle	-	45	50	55	%
$\varphi_{n(HSE)}$	Phase noise for 32 MHz	Offset = 10 kHz	-	-	-127	dBc / Hz
		Offset = 100 kHz	-	-	-135	
		Offset = 1 MHz	-	-	-138	

1. Specified by design, not tested in production.
2. Only AC coupled is supported (capacitor 470 pF to 100 nF).

Table 49. HSE oscillator characteristics

Symbol	Parameter	Conditions	Min	Typ	Max	Unit
$t_{SUA(HSE)}$	Startup time for 80% amplitude stabilization	V_{DDRF} stabilized, XOTUNE=000000, –40 to +125 °C range	-	1000	-	µs
$t_{SUR(HSE)}$	Startup time for XOREADY signal	V_{DDRF} stabilized, XOTUNE=000000, –40 to +125 °C range	-	250	-	
$I_{DDRF(HSE)}$	HSE current consumption	HSEGMC=000, XOTUNE=000000	-	50	-	µA
$XOT_{g(HSE)}$	XOTUNE granularity	Capacitor bank	-	1	5	ppm
$XOT_{fp(HSE)}$	XOTUNE frequency pulling		±20	±40	-	
$XOT_{nb(HSE)}$	XOTUNE number of tuning bits		-	6	-	bit
$XOT_{st(HSE)}$	XOTUNE setting time		-	-	0.1	ms

Note: For information about the trimming of the oscillator refer to AN5165 "Development of RF hardware using STM32WB microcontrollers", available on www.st.com.

Low-speed external user clock generated from an external source

The low-speed external (LSE) clock can be supplied with a 32.768 kHz crystal resonator oscillator. The information provided in this section is based on design simulation results obtained with typical external components specified in *Table 50*. In the application, the resonator and the load capacitors have to be placed as close as possible to the oscillator pins to minimize output distortion and startup stabilization time.

Refer to the crystal resonator manufacturer for more details on the resonator characteristics (frequency, package, accuracy).

Table 50. Low-speed external user clock characteristics(1)

Symbol	Parameter	Conditions	Min	Typ	Max	Unit
$I_{DD(LSE)}$	LSE current consumption	LSEDRV[1:0] = 00 Low drive capability	-	250	-	nA
		LSEDRV[1:0] = 01 Medium low drive capability	-	315	-	
		LSEDRV[1:0] = 10 Medium high drive capability	-	500	-	
		LSEDRV[1:0] = 11 High drive capability	-	630	-	
$G_{mcritmax}$	Maximum critical crystal g_m	LSEDRV[1:0] = 00 Low drive capability	-	-	0.50	µA / V
		LSEDRV[1:0] = 01 Medium low drive capability	-	-	0.75	
		LSEDRV[1:0] = 10 Medium high drive capability	-	-	1.70	
		LSEDRV[1:0] = 11 High drive capability	-	-	2.70	
$t_{SU(LSE)}$(2)	Startup time	V_{DD} stabilized	-	2	-	s

1. Specified by design, not tested in production.
2. $t_{SU(LSE)}$ is the startup time measured from the moment it is enabled (by software) until a stable 32 kHz oscillation is reached. This value is measured for a standard crystal and it can vary significantly with the crystal manufacturer.

Note: For information on selecting the crystal refer to application note AN2867 "Oscillator design guide for STM8S, STM8A and STM32 microcontrollers" available from www.st.com.

Figure 16. Typical application with a 32.768 kHz crystal

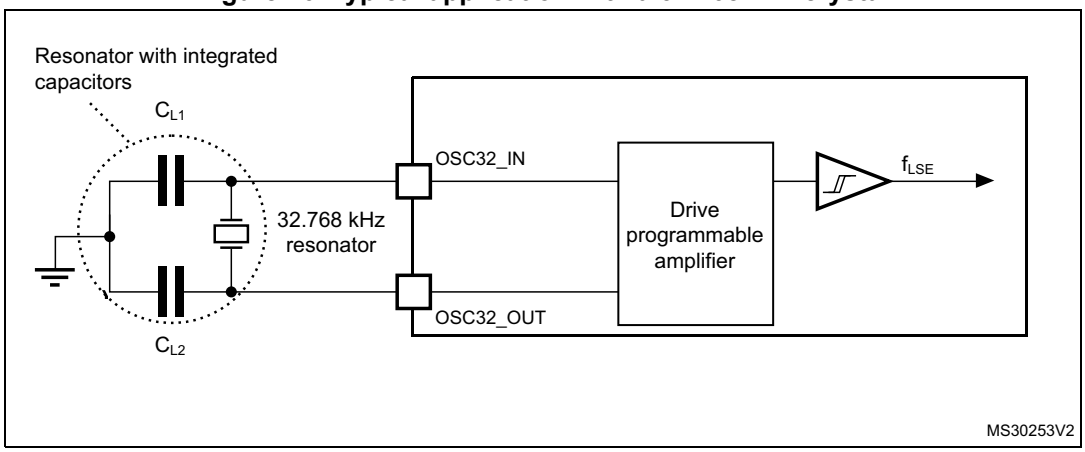

Note: No external resistors are required between OSC32_IN and OSC32_OUT, and it is forbidden to add one.

In bypass mode the LSE oscillator is switched off and the input pin is a standard GPIO.

The external clock signal has to respect the I/O characteristics detailed in *Section 6.3.16*. The recommend clock input waveform is shown in *Figure 17*.

Figure 17. Low-speed external clock source AC timing diagram

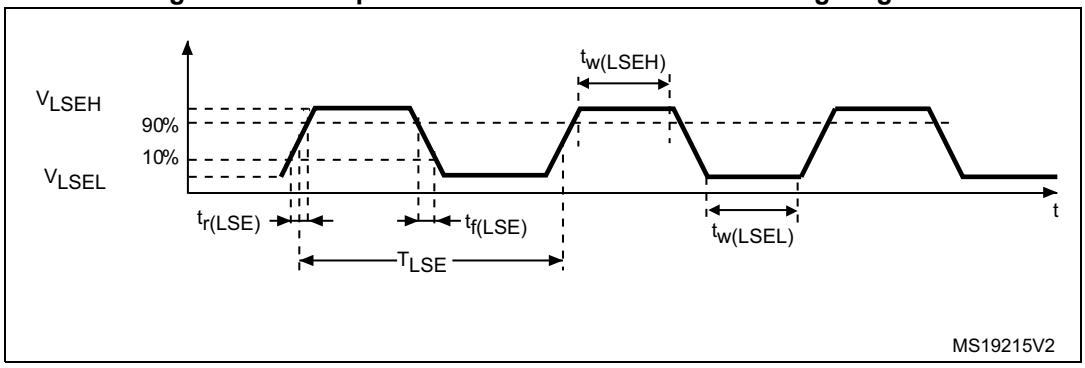

Table 51. Low-speed external user clock characteristics(1) – Bypass mode

Symbol	Parameter	Conditions	Min	Typ	Max	Unit
f_{LSE_ext}	User external clock source frequency	-	21.2	32.768	44.4	kHz

Table 51. Low-speed external user clock characteristics(1) – Bypass mode

Symbol	Parameter	Conditions	Min	Typ	Max	Unit
V_{LSEH}	OSC32_IN input pin high level voltage	-	0.7 V_{DDx}	-	V_{DDx}	V
V_{LSEL}	OSC32_IN input pin low level voltage	-	V_{SS}	-	0.3 V_{DDx}	
$t_{w(LSEH)}$ $t_{w(LSEL)}$	OSC32_IN high or low time	-	250	-	-	ns
f_{tolLSE}	Frequency tolerance	Includes initial accuracy, stability over temperature, aging and frequency pulling	-500	-	+500	ppm

1. Specified by design, not tested in production.

6.3.10 Internal clock source characteristics

The parameters given in *Table 52* are derived from tests performed under ambient temperature and supply voltage conditions summarized in *Table 21: General operating conditions*. The provided curves are characterization results, not tested in production.

High-speed internal (HSI16) RC oscillator

Table 52. HSI16 oscillator characteristics(1)

Symbol	Parameter	Conditions	Min	Typ	Max	Unit
f_{HSI16}	HSI16 frequency	V_{DD} = 3.0 V, T_A= 30 °C	15.88	-	16.08	MHz
TRIM	HSI16 user trimming step	Trimming code is not a multiple of 64	0.2	0.3	0.4	%
		Trimming code is a multiple of 64	-4	-6	-8	
DuCy(HSI16)(2)	Duty cycle	-	45	-	55	
Δ_{Temp}(HSI16)	HSI16 oscillator frequency drift over temperature	T_A = 0 to 85 °C	-1	-	1	
		T_A = –40 to 125 °C	-2	-	1.5	
Δ_{VDD}(HSI16)	HSI16 oscillator frequency drift over V_{DD}	V_{DD} = 1.62 V to 3.6 V	-0.1	-	0.05	
t_{su}(HSI16)(2)	HSI16 oscillator start-up time	-	-	0.8	1.2	µs
t_{stab}(HSI16)(2)	HSI16 oscillator stabilization time	-	-	3	5	
I_{DD}(HSI16)(2)	HSI16 oscillator power consumption	-	-	155	190	µA

1. Evaluated by characterization, not tested in production.
2. Specified by design, not tested in production.

Figure 18. HSI16 frequency vs. temperature

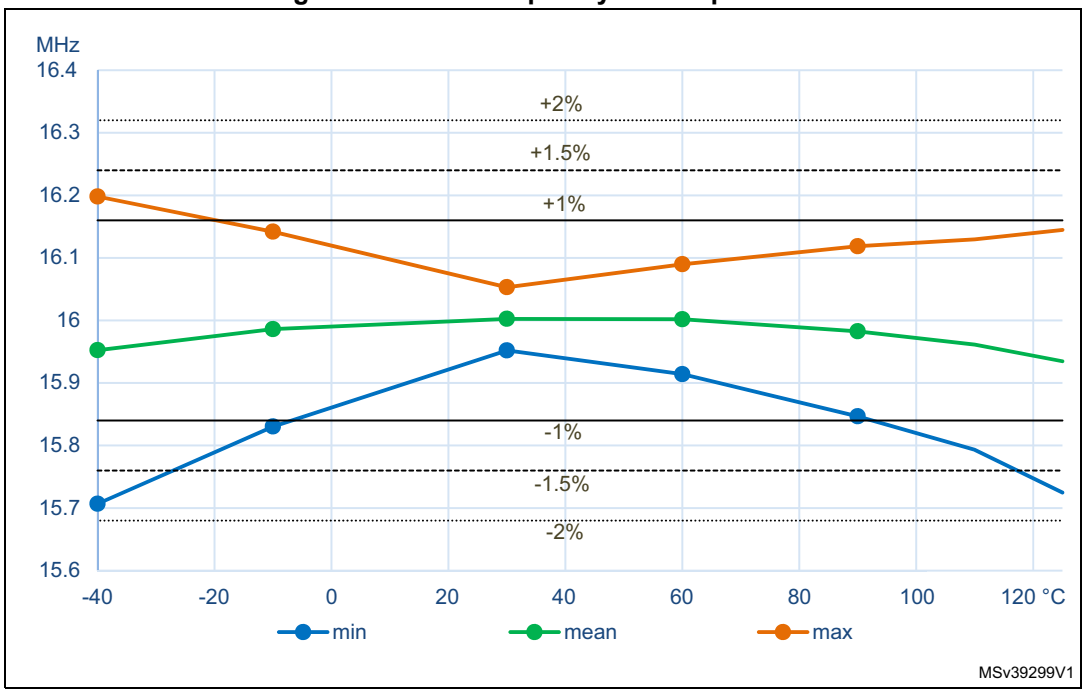

Multi-speed internal (MSI) RC oscillator

Table 53. MSI oscillator characteristics(1)

Symbol	Parameter	Conditions		Min	Typ	Max	Unit
f_{MSI}	MSI frequency after factory calibration, done at V_{DD}=3 V and T_A=30 °C	MSI mode	Range 0	98.7	100	101.3	kHz
			Range 1	197.4	200	202.6	
			Range 2	394.8	400	405.2	
			Range 3	789.6	800	810.4	
			Range 4	0.987	1	1.013	MHz
			Range 5	1.974	2	2.026	
			Range 6	3.948	4	4.052	
			Range 7	7.896	8	8.104	
			Range 8	15.79	16	16.21	
			Range 9	23.69	24	24.31	
			Range 10	31.58	32	32.42	
			Range 11	47.38	48	48.62	
		PLL mode XTAL= 32.768 kHz	Range 0	-	98.304	-	kHz
			Range 1	-	196.608	-	
			Range 2	-	393.216	-	
			Range 3	-	786.432	-	
			Range 4	-	1.016	-	MHz
			Range 5	-	1.999	-	
			Range 6	-	3.998	-	
			Range 7	-	7.995	-	
			Range 8	-	15.991	-	
			Range 9	-	23.986	-	
			Range 10	-	32.014	-	
			Range 11	-	48.005	-	
$\Delta_{TEMP}(MSI)$(2)	MSI oscillator frequency drift over temperature	MSI mode	T_A= 0 to 85 °C	-3.5	-	3	%
			T_A= –40 to 125 °C	-8	-	6	

Table 53. MSI oscillator characteristics(1) (continued)

Symbol	Parameter	Conditions			Min	Typ	Max	Unit
Δ_{VDD}(MSI)(2)	MSI oscillator frequency drift over V_{DD} (reference is 3 V)	MSI mode	Range 0 to 3	V_{DD} = 1,62 to 3.6 V	-1.2	-	0.5	%
				V_{DD} = 2.4 to 3.6 V	-0.5	-		
			Range 4 to 7	V_{DD} = 1,62 to 3.6 V	-2.5	-	0.7	
				V_{DD} = 2.4 to 3.6 V	-0.8	-		
			Range 8 to 11	V_{DD} = 1.62 to 3.6 V	-5	-	1	
				V_{DD} = 2.4 to 3.6 V	-1.6	-		
$\Delta F_{SAMPLING}$ (MSI)(2)(4)	Frequency variation in sampling mode(3)		T_A= –40 to 105 °C		-	1	2	
			T_A= –40 to 125 °C		-	2	4	
CC jitter(MSI)(4)	RMS cycle-to-cycle jitter	PLL mode Range 11		-	-	60	-	ps
P jitter(MSI)(4)	RMS period jitter	PLL mode Range 11		-	-	50	-	
t_{SU}(MSI)(4)	MSI oscillator start-up time	Range 0		-	-	10	20	µs
		Range 1		-	-	5	10	
		Range 2		-	-	4	8	
		Range 3		-	-	3	7	
		Range 4 to 7		-	-	3	6	
		Range 8 to 11		-	-	2.5	6	
t_{STAB}(MSI)(4)	MSI oscillator stabilization time	PLL mode Range 11	10 % of final frequency	-	-	0.25	0.5	ms
			5 % of final frequency	-	-	0.5	1.25	
			1 % of final frequency	-	-	-	2.5	

Table 53. MSI oscillator characteristics(1) (continued)

Symbol	Parameter	Conditions			Min	Typ	Max	Unit
$I_{DD}(MSI)^{(4)}$	MSI oscillator power consumption	MSI and PLL mode	Range 0	-	-	0.6	1	µA
			Range 1	-	-	0.8	1.2	
			Range 2	-	-	1.2	1.7	
			Range 3	-	-	1.9	2.5	
			Range 4	-	-	4.7	6	
			Range 5	-	-	6.5	9	
			Range 6	-	-	11	15	
			Range 7	-	-	18.5	25	
			Range 8	-	-	62	80	
			Range 9	-	-	85	110	
			Range 10	-	-	110	130	
			Range 11	-	-	155	190	

1. Evaluated by characterization, not tested in production.
2. This is a deviation for an individual part once the initial frequency has been measured.
3. Sampling mode means Low-power run/Low-power sleep modes with Temperature sensor disable.
4. Specified by design, not tested in production.

Figure 19. Typical current consumption vs. MSI frequency

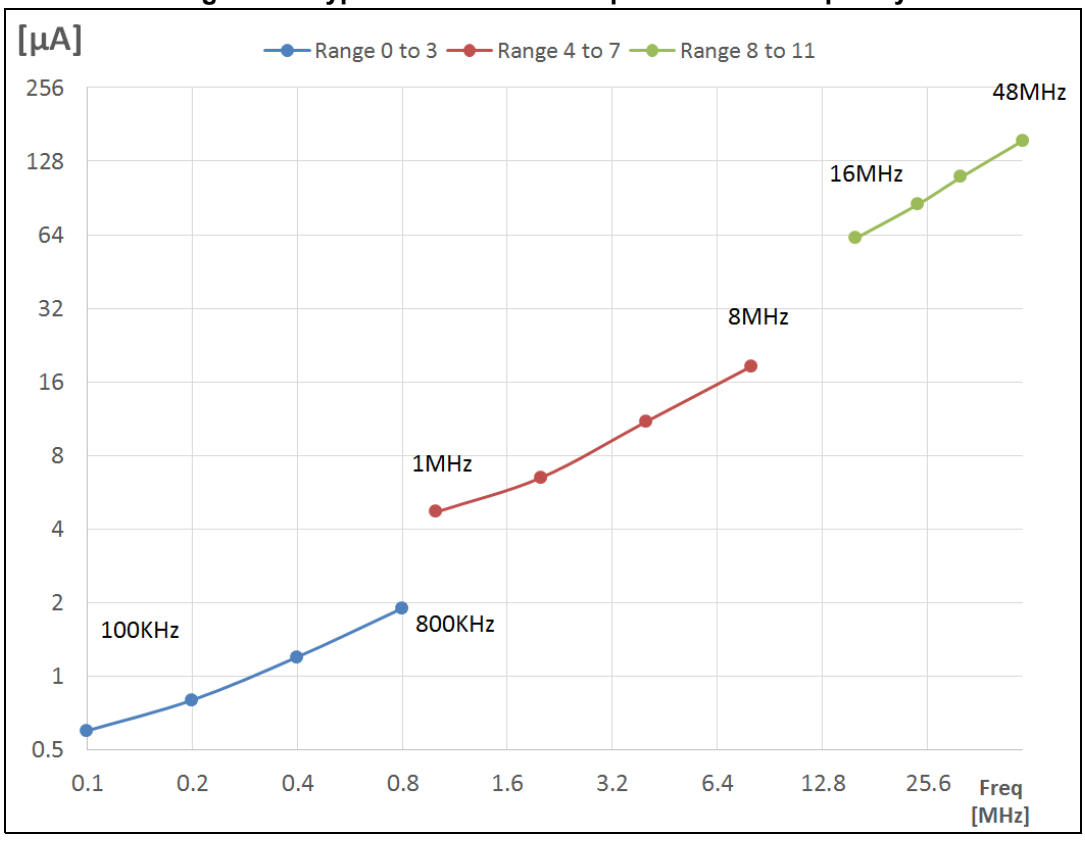

Low-speed internal (LSI) RC oscillator

Table 54. LSI1 oscillator characteristics(1)

Symbol	Parameter	Conditions	Min	Typ	Max	Unit
f_{LSI}	LSI1 frequency	V_{DD} = 3.0 V, T_A = 30 °C	31.04	-	32.96	kHz
		V_{DD} = 1.62 to 3.6 V, T_A = -40 to 125 °C	29.5	-	34	
$t_{SU}(LSI1)$(2)	LSI1 oscillator start-up time	-	-	80	130	µs
$t_{STAB}(LSI1)$(2)	LSI1 oscillator stabilization time	5% of final frequency	-	125	180	
$I_{DD}(LSI1)$(2)	LSI1 oscillator power consumption	-	-	110	180	nA

1. Evaluated by characterization, not tested in production.
2. Specified by design, not tested in production.

Table 55. LSI2 oscillator characteristics(1)

Symbol	Parameter	Conditions	Min	Typ	Max	Unit
f_{LSI2}	Frequency(2)	V_{DD} = 1.62 to 3.6 V, T_A = -40 to 125 °C	22	32	48	kHz
$t_{SU}(LSI2)$(3)	Start-up time	-	1.0	-	3.5	ms
$I_{DD}(LSI2)$(3)	Power consumption	-	-	1	2	µA
ΔTEMP(LSI2)	Stability over temperature	-	-200	-	200	ppm/ °C

1. Evaluated by characterization, not tested in production.
2. LSI2 cannot be trimmed.
3. Specified by design, not tested in production. LSI2TRIM[3:0] field of register RCC_CSR = 0xC.

6.3.11 PLL characteristics

The parameters given in *Table 56* are derived from tests performed under temperature and V_{DD} supply voltage conditions summarized in *Table 21: General operating conditions*.

Table 56. PLL characteristics(1)

Symbol	Parameter	Conditions	Min	Typ	Max	Unit
f_{PLL_IN}	PLL input clock(2)	-	2.66	-	16	MHz
	PLL input clock duty cycle	-	45	-	55	%
$f_{PLL_P_OUT}$	PLL multiplier output clock P	-	2	-	64	MHz
$f_{PLL_Q_OUT}$	PLL multiplier output clock Q	-	8	-	64	
$f_{PLL_R_OUT}$	PLL multiplier output clock R	-	8	-	64	
f_{VCO_OUT}	PLL VCO output	-	96	-	344	
t_{LOCK}	PLL lock time	-	-	15	40	µs
Jitter	RMS cycle-to-cycle jitter	System clock 64 MHz	-	40	-	ps
	RMS period jitter		-	30	-	

Table 56. PLL characteristics(1) (continued)

Symbol	Parameter	Conditions	Min	Typ	Max	Unit
I_{DD}(PLL)	PLL power consumption on V_{DD}(1)	VCO freq = 96 MHz	-	200	260	µA
		VCO freq = 192 MHz	-	300	380	
		VCO freq = 344 MHz	-	520	650	

1. Specified by design, not tested in production.
2. Take care of using the appropriate division factor M to obtain the specified PLL input clock values. The M factor is shared between the two PLLs.

6.3.12 Flash memory characteristics

Table 57. Flash memory characteristics(1)

Symbol	Parameter	Conditions	Typ	Max	Unit
t_{prog}	64-bit programming time	-	81.7	90.8	µs
t_{prog_row}	One row (64 double word) programming time	Normal programming	5.2	5.5	ms
		Fast programming	3.8	4.0	
t_{prog_page}	One page (2 Kbytes) programming time	Normal programming	41.8	43.0	
		Fast programming	30.4	31.0	
t_{ERASE}	Page (2 Kbytes) erase time	-	22.0	24.5	
t_{ME}	Mass erase time	-	22.1	25.0	
I_{DD}	Average consumption from V_{DD}	Write mode	3.4	-	mA
		Erase mode	3.4	-	

1. Specified by design, not tested in production.

Table 58. Flash memory endurance and data retention

Symbol	Parameter	Conditions	Min(1)	Unit
N_{END}	Endurance	T_A = –40 to +105 °C	10	kcycles
t_{RET}	Data retention	1 kcycle(2) at T_A = 85 °C	30	Years
		1 kcycle(2) at T_A = 105 °C	15	
		1 kcycle(2) at T_A = 125 °C	7	
		10 kcycles(2) at T_A = 55 °C	30	
		10 kcycles(2) at T_A = 85 °C	15	
		10 kcycles(2) at T_A = 105 °C	10	

1. Evaluated by characterization, not tested in production.
2. Cycling performed over the whole temperature range.

6.3.13 EMC characteristics

Susceptibility tests are performed on a sample basis during device characterization.

Functional EMS (electromagnetic susceptibility)

While a simple application is executed on the device (toggling two LEDs through I/O ports). the device is stressed by two electromagnetic events until a failure occurs. The failure is indicated by the LEDs:

- **Electrostatic discharge (ESD)** (positive and negative) is applied to all device pins until a functional disturbance occurs. This test is compliant with the IEC 61000-4-2 standard.
- **FTB**: a burst of fast transient voltage (positive and negative) is applied to V_{DD} and V_{SS} through a 100 pF capacitor, until a functional disturbance occurs. This test is compliant with the IEC 61000-4-4 standard.

A device reset allows normal operations to be resumed.

The test results are given in *Table 59*. They are based on the EMS levels and classes defined in application note AN1709 "*EMC design guide for STM8, STM32 and Legacy MCUs*", available on *www.st.com*.

Table 59. EMS characteristics

Symbol	Parameter	Conditions	Level/Class
V_{FESD}	Voltage limits to be applied on any I/O pin to induce a functional disturbance	V_{DD} = 3.3 V, T_A = +25 °C, f_{HCLK} = 64 MHz, conforming to IEC 61000-4-2	3B
V_{EFTB}	Fast transient voltage burst limits to be applied through 100 pF on V_{DD} and V_{SS} pins to induce a functional disturbance	V_{DD} = 3.3 V, T_A = +25 °C, f_{HCLK} = 64 MHz, conforming to IEC 61000-4-4	5A

Designing hardened software to avoid noise problems

EMC characterization and optimization are performed at component level with a typical application environment and simplified MCU software. It should be noted that good EMC performance is highly dependent on the user application and the software in particular.

Therefore it is recommended that the user applies EMC software optimization and prequalification tests in relation with the EMC level requested for his application.

Software recommendations

The software flow must include the management of runaway conditions such as:

- corrupted program counter
- unexpected reset
- critical data corruption (e.g. control registers)

Prequalification trials

Most of the common failures (unexpected reset and program counter corruption) can be reproduced by manually forcing a low state on the NRST pin or the Oscillator pins for 1 second.

To complete these trials, ESD stress can be applied directly on the device, over the range of specification values. When unexpected behavior is detected, the software can be hardened

to prevent unrecoverable errors occurring (see application note AN1015, available on *www.st.com*).

Electromagnetic interference (EMI)

The electromagnetic field emitted by the device are monitored while a simple application is executed (toggling two LEDs through the I/O ports). This emission test is compliant with the IEC 61967-2 standard, which specifies the test board and the pin loading.

Table 60. EMI characteristics

Symbol	Parameter	Conditions	Monitored frequency band	Peripheral ON [f_{HSE} / f_{CPUM4}, f_{CPUM0}]	Unit
				32 MHz / 64 MHz, 32 MHz	
S_{EMI}	Peak level	V_{DD} = 3.6 V, T_A = 25 °C, UFQFPN48 package compliant with IEC 61967-2	0.1 MHz to 30 MHz	4	dBµV
			30 MHz to 130 MHz	8	
			130 MHz to 1 GHz	0	
			1 GHz to 2 GHz	9	
			EMI level	1.5	-

6.3.14 Electrical sensitivity characteristics

Based on three different tests (ESD, LU) using specific measurement methods, the device is stressed to determine its performance in terms of electrical sensitivity.

Electrostatic discharge (ESD)

Electrostatic discharges (a positive then a negative pulse separated by 1 second) are applied to the pins of each sample according to each pin combination. The sample size depends on the number of supply pins in the device (3 parts × (n+1) supply pins). This test conforms to the ANSI/JEDEC standard.

Table 61. ESD absolute maximum ratings

Symbol	Ratings	Conditions	Class	Maximum value(1)	Unit
$V_{ESD(HBM)}$	Electrostatic discharge voltage (human body model)	T_A = +25 °C, conforming to ANSI/ESDA/JEDEC JS-001	2	2000	V
$V_{ESD(CDM)}$	Electrostatic discharge voltage (charge device model)	T_A = +25 °C, conforming to ANSI/ESD STM5.3.1 JS-002	C2a	500	

1. Evaluated by characterization, not tested in production.

Static latch-up

Two complementary static tests are required on six parts to assess the latch-up performance:

- a supply overvoltage is applied to each power supply pin
- a current injection is applied to each input, output and configurable I/O pin.

These tests are compliant with EIA/JESD 78A IC latch-up standard.

Table 62. Electrical sensitivity

Symbol	Parameter	Conditions	Class
LU	Static latch-up class	T_A = +105 °C conforming to JESD78A	II

6.3.15 I/O current injection characteristics

As a general rule, current injection to the I/O pins, due to external voltage below V_{SS} or above V_{DD} (for standard, 3.3 V-capable I/O pins) should be avoided during normal product operation. However, in order to give an indication of the robustness of the microcontroller in cases when abnormal injection accidentally happens, susceptibility tests are performed on a sample basis during device characterization.

Functional susceptibility to I/O current injection

While a simple application is executed on the device, the device is stressed by injecting current into the I/O pins programmed in floating input mode. While current is injected into the I/O pin, one at a time, the device is checked for functional failures.

The failure is indicated by an out of range parameter: ADC error above a certain limit (higher than 5 LSB TUE), out of conventional limits of induced leakage current on adjacent pins (out of the -5 µA / 0 µA range) or other functional failure (for example reset occurrence or oscillator frequency deviation).

The characterization results are shown in *Table 63*.

Negative induced leakage current is caused by negative injection and positive induced leakage current is caused by positive injection.

Table 63. I/O current injection susceptibility(1)

Symbol	Description		Functional susceptibility		Unit
			Negative injection	Positive injection	
I_{INJ}	Injected current	All pins except AT0, AT1, PB0 and PB1	-5	N/A(2)	mA
		AT0, AT1, PB0 and PB1 pins	0	0	

1. Evaluated by characterization, not tested in production.
2. Injection not possible.

6.3.16 I/O port characteristics

General input/output characteristics

Unless otherwise specified, the parameters given in *Table 64* are derived from tests performed under the conditions summarized in *Table 21: General operating conditions*. All I/Os are designed as CMOS- and TTL-compliant.

Table 64. I/O static characteristics

Symbol	Parameter	Conditions	Min	Typ	Max	Unit
V_{IL}	I/O input low level voltage(1)	1.71 V < V_{DD} < 3.6 V	-	-	0.3 x V_{DD}	V
	I/O input low level voltage(1)				0.39 x V_{DD} - 0.06	
V_{IH}	I/O input high level voltage(1)		0.7 x V_{DD}	-	-	
	I/O input high level voltage(1)		0.49 x V_{DD} + 0.26	-	-	
V_{hys}	TT, FT_xxx and NRST I/O input hysteresis		-	200	-	mV
I_{lkg}	FT_xx input leakage current	0 ≤ V_{IN} ≤ Max(V_{DDXXX})(2)	-	-	±100	nA
		Max(V_{DDXXX}) ≤ V_{IN} ≤ Max(V_{DDXXX}) +1 V(1)(2)(3)	-	-	650	
		Max(V_{DDXXX}) +1 V < V_{IN} ≤ 5.5 V(1)(2)(3)(4)(5)	-	-	200(6)	
	TT input leakage current	V_{IN} ≤ Max(V_{DDXXX})(2)	-	-	±150	
		Max(V_{DDXXX}) ≤ V_{IN} < 3.6 V(2)	-	-	2000	
R_{PU}	Weak pull-up equivalent resistor(1)	V_{IN} = V_{SS}	25	40	55	kΩ
R_{PD}	Weak pull-down equivalent resistor(1)	V_{IN} = V_{DD}	25	40	55	
C_{IO}	I/O pin capacitance	-	-	5	-	pF

1. Specified by design, not tested in production.
2. Represents the pad leakage of the I/O itself. The total product pad leakage is given by $I_{Total_Ileak_max}$ = 10 µA + number of I/Os where V_{IN} is applied on the pad x $I_{lkg(Max)}$.
3. Max(V_{DDXXX}) is the maximum value among all the I/O supplies.
4. V_{IN} must be lower than [Max(V_{DDXXX}) + 3.6 V].
5. Refer to *Figure 20: I/O input characteristics*.
6. To sustain a voltage higher than min(V_{DD}, V_{DDA}) + 0.3 V, the internal pull-up and pull-down resistors must be disabled. All FT_xx IO except PC3.

All I/Os are CMOS- and TTL-compliant (no software configuration required). Their characteristics cover more than the strict CMOS-technology or TTL parameters, as shown in *Figure 20* .

Figure 20. I/O input characteristics

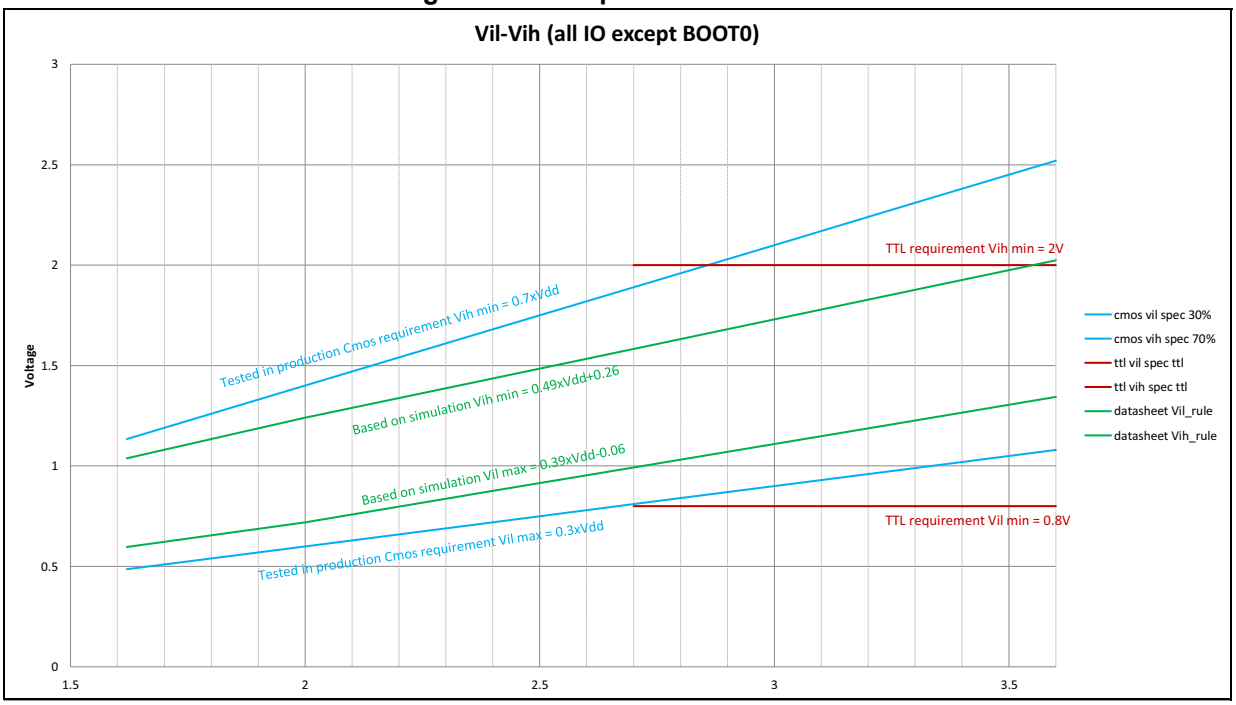

Output driving current

The GPIOs (general purpose input/outputs) can sink or source up to ±8 mA, and sink or source up to ± 20 mA (with a relaxed V_{OL} / V_{OH}).

In the user application, the number of I/O pins that can drive current must be limited to respect the absolute maximum rating specified in *Section 6.2*.

- The sum of the currents sourced by all the I/Os on V_{DD}, plus the maximum consumption of the MCU sourced on $V_{DD,}$ cannot exceed the absolute maximum rating ΣI_{VDD} (see *Table 17: Voltage characteristics*).
- The sum of the currents sunk by all the I/Os on V_{SS}, plus the maximum consumption of the MCU sunk on V_{SS}, cannot exceed the absolute maximum rating ΣI_{VSS} (see *Table 17: Voltage characteristics*).

Output voltage levels

Unless otherwise specified, the parameters given in the table below are derived from tests performed under the ambient temperature and supply voltage conditions summarized in *Table 21: General operating conditions*. All I/Os are CMOS- and TTL-compliant (FT or TT unless otherwise specified).

Table 65. Output voltage characteristics(1)

Symbol	Parameter	Conditions	Min	Max	Unit
V_{OL}(2)	Output low level voltage for an I/O pin	CMOS port(3) $\|I_{IO}\|$ = 8 mA $V_{DD} \geq 2.7$ V	-	0.4	V
V_{OH}(2)	Output high level voltage for an I/O pin		V_{DD} - 0.4	-	
V_{OL}(2)	Output low level voltage for an I/O pin	TTL port(3) $\|I_{IO}\|$ = 8 mA $V_{DD} \geq 2.7$ V	-	0.4	
V_{OH}(2)	Output high level voltage for an I/O pin		2.4	-	
V_{OL}(2)	Output low level voltage for an I/O pin	$\|I_{IO}\|$ = 20 mA $V_{DD} \geq 2.7$ V	-	1.3	
V_{OH}(2)	Output high level voltage for an I/O pin		V_{DD} - 1.3	-	
V_{OL}(2)	Output low level voltage for an I/O pin	$\|I_{IO}\|$ = 4 mA $V_{DD} \geq 1.71$ V	-	0.4	
V_{OH}(2)	Output high level voltage for an I/O pin		V_{DD} - 0.45	-	
V_{OLFM+}(2)	Output low level voltage for an FT I/O pin in FM+ mode (FT I/O with “f” option)	$\|I_{IO}\|$ = 20 mA $V_{DD} \geq 2.7$ V	-	0.4	
		$\|I_{IO}\|$ = 10 mA $V_{DD} \geq 1.71$ V	-	0.4	

1. The I_{IO} current sourced or sunk by the device must always respect the absolute maximum rating specified in *Table 17: Voltage characteristics*, and the sum of the currents sourced or sunk by all the I/Os (I/O ports and control pins) must always respect the absolute maximum ratings ΣI_{IO}.
2. Specified by design, not tested in production.
3. TTL and CMOS outputs are compatible with JEDEC standards JESD36 and JESD52.

Input/output AC characteristics

The definition and values of input/output AC characteristics are given in *Table 66*.

Unless otherwise specified, the parameters given are derived from tests performed under the ambient temperature and supply voltage conditions summarized in *Table 21: General operating conditions*.

Table 66. I/O AC characteristics(1)(2)

Speed	Symbol	Parameter	Conditions	Min	Max	Unit
00	Fmax	Maximum frequency	C = 50 pF, 2.7 V ≤ V_{DD} ≤ 3.6 V	-	5	MHz
			C = 50 pF, 1.71 V ≤ V_{DD} ≤ 2.7 V	-	1	
			C=10 pF, 2.7 V ≤ V_{DD} ≤ 3.6 V	-	10	
			C=10 pF, 1.71 V ≤ V_{DD} ≤ 2.7 V	-	1.5	
	Tr/Tf	Output rise and fall time	C = 50 pF, 2.7 V ≤ V_{DD} ≤ 3.6 V	-	25	ns
			C = 50 pF, 1.71 V ≤ V_{DD} ≤ 2.7 V	-	52	
			C = 10 pF, 2.7 V ≤ V_{DD} ≤ 3.6 V	-	17	
			C = 10 pF, 1.71 V ≤ V_{DD} ≤ 2.7 V	-	37	

Table 66. I/O AC characteristics(1)(2) (continued)

Speed	Symbol	Parameter	Conditions	Min	Max	Unit
01	Fmax	Maximum frequency	C = 50 pF, 2.7 V ≤ V_{DD} ≤ 3.6 V	-	25	MHz
			C = 50 pF, 1.71 V ≤ V_{DD} ≤ 2.7 V	-	10	
			C = 10 pF, 2.7 V ≤ V_{DD} ≤ 3.6 V	-	50	
			C = 10 pF, 1.71 V ≤ V_{DD} ≤ 2.7 V	-	15	
	Tr/Tf	Output rise and fall time	C = 50 pF, 2.7 V ≤ V_{DD} ≤ 3.6 V	-	9	ns
			C = 50 pF, 1.71 V ≤ V_{DD} ≤ 2.7 V	-	16	
			C = 10 pF, 2.7 V ≤ V_{DD} ≤ 3.6 V	-	4.5	
			C = 10 pF, 1.71 V ≤ V_{DD} ≤ 2.7 V	-	9	
10	Fmax	Maximum frequency	C = 50 pF, 2.7 V ≤ V_{DD} ≤ 3.6 V	-	50	MHz
			C = 50 pF, 1.71 V ≤ V_{DD} ≤ 2.7 V	-	25	
			C = 10 pF, 2.7 V ≤ V_{DD} ≤ 3.6 V	-	100(3)	
			C = 10 pF, 1.71 V ≤ V_{DD} ≤ 2.7 V	-	37.5	
	Tr/Tf	Output rise and fall time	C = 50 pF, 2.7 V ≤ V_{DD} ≤ 3.6 V	-	5.8	ns
			C = 50 pF, 1.71 V ≤ V_{DD} ≤ 2.7 V	-	11	
			C = 10 pF, 2.7 V ≤ V_{DD} ≤ 3.6 V	-	2.5	
			C = 10 pF, 1.71 V ≤ V_{DD} ≤ 2.7 V	-	5	
11	Fmax	Maximum frequency	C = 30 pF, 2.7 V ≤ V_{DD} ≤ 3.6 V	-	120(3)	MHz
			C = 30 pF, 1.71 V ≤ V_{DD} ≤ 2.7 V	-	50	
			C = 10 pF, 2.7 V ≤ V_{DD} ≤ 3.6 V	-	180(3)	
			C = 10 pF, 1.71 V ≤ V_{DD} ≤ 2.7 V	-	75(3)	
	Tr/Tf	Output rise and fall time	C = 30 pF, 2.7 V ≤ V_{DD} ≤ 3.6 V	-	3.3	ns
			C = 30 pF, 1.71 V ≤ V_{DD} ≤ 2.7 V	-	6	
			C = 10 pF, 2.7 V ≤ V_{DD} ≤ 3.6 V	-	1.7	
			C = 10 pF, 1.71 V ≤ V_{DD} ≤ 2.7 V	-	3.3	

1. The maximum frequency is defined with (T_r+ T_f) ≤ 2/3 T, and Duty cycle comprised between 45 and 55%.
2. The fall and rise time are defined, respectively, between 90 and 10%, and between 10 and 90% of the output waveform.
3. This value represents the I/O capability but the maximum system frequency is limited to 64 MHz.

6.3.17 NRST pin characteristics

The NRST pin input driver uses the CMOS technology. It is connected to a permanent pull-up resistor, R_{PU}.

Unless otherwise specified, the parameters given in the table below are derived from tests performed under the ambient temperature and supply voltage conditions summarized in *Table 21: General operating conditions*.

Table 67. NRST pin characteristics(1)

Symbol	Parameter	Conditions	Min	Typ	Max	Unit
$V_{IL(NRST)}$	NRST input low level voltage	-	-	-	0.3 x V_{DD}	V
$V_{IH(NRST)}$	NRST input high level voltage	-	0.7 x V_{DD}	-	-	
$V_{hys(NRST)}$	NRST Schmitt trigger voltage hysteresis	-	-	200	-	mV
R_{PU}	Weak pull-up equivalent resistor(2)	$V_{IN} = V_{SS}$	25	40	55	kΩ
$V_{F(NRST)}$	NRST input filtered pulse	-	-	-	70	ns
$V_{NF(NRST)}$	NRST input not filtered pulse	1.71 V ≤ V_{DD} ≤ 3.6 V	350	-	-	

1. Specified by design, not tested in production.
2. The pull-up is designed with a true resistance in series with a switchable PMOS. This PMOS contribution to the series resistance is minimal (~10%).

Figure 21. Recommended NRST pin protection

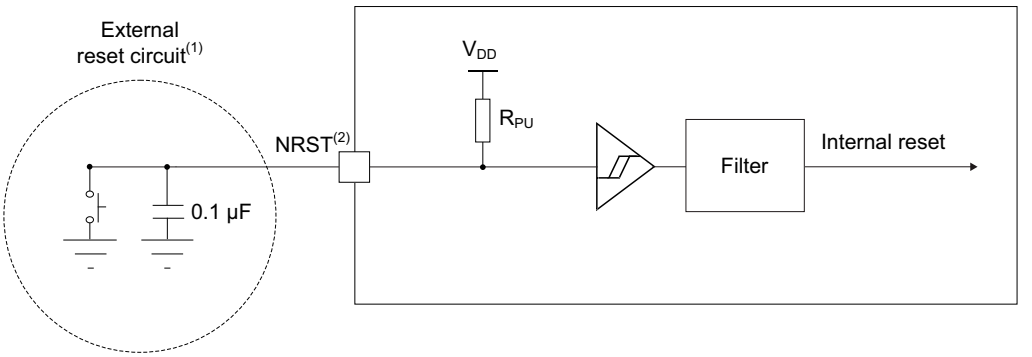

1. The reset network protects the device against parasitic resets.
2. The user must ensure that the level on the NRST pin can go below the $V_{IL(NRST)}$ max level specified in *Table 67*, otherwise the reset is not taken into account by the device.
3. The external capacitor on NRST must be placed as close as possible to the device.

6.3.18 Analog switches booster

Table 68. Analog switches booster characteristics(1)

Symbol	Parameter	Min	Typ	Max	Unit
V_{DD}	Supply voltage	1.71	-	3.6	V
$t_{SU(BOOST)}$	Booster startup time	-	-	240	µs
$I_{DD(BOOST)}$	Booster consumption for 1.71 V ≤ V_{DD} ≤ 2.0 V	-	-	250	µA
	Booster consumption for 2.0 V ≤ V_{DD} ≤ 2.7 V	-	-	500	
	Booster consumption for 2.7 V ≤ V_{DD} ≤ 3.6 V	-	-	900	

1. Specified by design, not tested in production.

6.3.19 Analog-to-Digital converter characteristics

Unless otherwise specified, the parameters given in *Table 69* are preliminary values derived from tests performed under ambient temperature, f_{PCLK} frequency and V_{DDA} supply voltage conditions summarized in *Table 21: General operating conditions*.

Note: It is recommended to perform a calibration after each power-up.

Table 69. ADC characteristics(1) (2)

Symbol	Parameter	Conditions	Min	Typ	Max	Unit
V_{DDA}	Analog supply voltage	-	1.62	-	3.6	V
f_{ADC}	ADC clock frequency	-	0.14	-	35	MHz
f_s	Sampling rate	12 bits, V_{DDA} ≤ 2.0 V	-	-	2.18	Msps
		10 bits, V_{DDA} ≤ 2.0 V	-	-	2.50	
		8 bits, V_{DDA} ≤ 2.0 V	-	-	2.92	
		6 bits, V_{DDA} ≤ 2.0 V	-	-	3.50	
		12 bits, V_{DDA} > 2.0 V	-	-	2.50	
		10 bits, V_{DDA} > 2.0 V	-	-	2.92	
		8 bits, V_{DDA} > 2.0 V	-	-	3.50	
		6 bits, V_{DDA} > 2.0 V	-	-	4.38	
f_{TRIG}	External trigger frequency	f_{ADC} = 35 MHz 12 bits, V_{DDA} ≤ 2.0 V	-	-	2.18	MHz
		f_{ADC} = 35 MHz 12 bits, V_{DDA} > 2.0 V	-	-	2.33	
		12 bits, V_{DDA} ≤ 2.0 V			f_{ADC}/16	
		12 bits, V_{DDA} > 2.0 V	-	-	f_{ADC}/15	
V_{AIN} (3)	Conversion voltage range(2)	-	0	-	V_{DDA}	V

Table 69. ADC characteristics(1) (2) (continued)

Symbol	Parameter	Conditions	Min	Typ	Max	Unit
R_{AIN}	External input impedance	-	-	-	50	kΩ
C_{ADC}	Internal sample and hold capacitor	-	-	5	-	pF
t_{STAB}	Power-up time	-	2			Conversion cycle
t_{CAL}	Calibration time	f_{ADC} = 35 MHz	2.35			µs
		-	82			1 / f_{ADC}
t_{LATR}	Trigger conversion latency	CKMODE = 00	2	-	3	1 / f_{ADC}
		CKMODE = 01	-	6.5	-	
		CKMODE = 10	-	12.5	-	
		CKMODE = 11	-	3.5	-	
t_s	Sampling time	f_{ADC} = 35 MHz	0.043	-	4.59	µs
		-	1.5	-	160.5	1 / f_{ADC}
$t_{ADCVREG_STUP}$	ADC voltage regulator start-up time	-	-	-	20	µs
t_{CONV}	Total conversion time (including sampling time)	f_{ADC} = 35 MHz Resolution = 12 bits	0.40	-	4.95	µs
		Resolution = 12 bits	t_s + 12.5 cycles for successive approximations = 14 to 173			1 / f_{ADC}
I_{DDA}(ADC)	ADC consumption from the V_{DDA} supply	fs = 2.5 Msps	-	475	-	µA
		fs = 1 Msps	-	190	-	
		fs = 10 ksps	-	17.3	-	

1. Specified by design, not tested in production.
2. The I/O analog switch voltage booster is enabled when V_{DDA} < 2.4 V (BOOSTEN = 1 in the SYSCFG_CFGR1 when V_{DDA} < 2.4V). It is disable when V_{DDA} ≥ 2.4 V.
3. V_{REF+} is internally connected to V_{DDA} and V_{REF-} is internally connected to V_{SS}.

Table 70. Maximum ADC R_{AIN} values

Resolution	Sampling cycle at 35 MHz (ns)	Sampling time at 35 MHz (ns)	Max. R_{AIN}(1)(2)(Ω)
12 bits	1.5(3)	43	50
	3.5	100	680
	7.5	214	2200
	12.5	357	4700
	19.5	557	8200
	39.5	1129	15000
	79.5	2271	33000
	160.5	4586	50000
10 bits	1.5(3)	43	68
	3.5	100	820
	7.5	214	3300
	12.5	357	5600
	19.5	557	10000
	39.5	1129	22000
	79.5	2271	39000
	160.5	4586	50000
8 bits	1.5(3)	43	82
	3.5	100	1500
	7.5	214	3900
	12.5	357	6800
	19.5	557	12000
	39.5	1129	27000
	79.5	2271	50000
	160.5	4586	50000
6 bits	1.5(3)	43	390
	3.5	100	2200
	7.5	214	5600
	12.5	357	10000
	19.5	557	15000
	39.5	1129	33000
	79.5	2271	50000
	160.5	4586	50000

1. Specified by design, not tested in production.
2. I/O analog switch voltage booster must be enabled (BOOSTEN = 1 in the SYSCFG_CFGR1) when V_{DDA} < 2.4 V and disabled when $V_{DDA} \geq$ 2.4 V.
3. Only allowed with V_{DDA} > 2 V

Table 71. ADC accuracy(1)(2)(3)

Symbol	Parameter	Conditions(4)	Min	Typ	Max	Unit
ET	Total unadjusted error	V_{DDA} = 3 V, f_{ADC} = 35 MHz, $f_s \le 2.5$ Msps, T_A = 25 °C	-	3	4	LSB
		2 V < V_{DDA} < 3.6 V, f_{ADC} = 35 MHz, $f_s \le 2.5$ Msps, T_A = entire range	-	3	6.5	
		1.62 V < V_{DDA} < 3.6 V, T_A = entire range, f_{ADC} = 35 MHz, $f_s \le 2.2$ Msps	-	3	7.5	
EO	Offset error	V_{DDA} = 3 V, f_{ADC} = 35 MHz, $f_s \le 2.5$ Msps, T_A = 25 °C	-	1.5	2	
		2 V < V_{DDA} < 3.6 V, f_{ADC} = 35 MHz, $f_s \le 2.5$ Msps, T_A = entire range	-	1.5	4.5	
		1.62 V < V_{DDA} < 3.6 V, T_A = entire range, f_{ADC} = 35 MHz, $f_s \le 2.2$ Msps	-	1.5	5.5	
EG	Gain error	V_{DDA} = 3 V, f_{ADC} = 35 MHz, $f_s \le 2.5$ Msps, T_A = 25 °C	-	3	3.5	
		2 V < V_{DDA} < 3.6 V, f_{ADC} = 35 MHz, $f_s \le 2.5$ Msps, T_A = entire range	-	3	5	
		1.62 V < V_{DDA} < 3.6 V, T_A = entire range, f_{ADC} = 35 MHz, $f_s \le 2.2$ Msps	-	3	6.5	
ED	Differential linearity error	V_{DDA} = 3 V, f_{ADC} = 35 MHz, $f_s \le 2.5$ Msps, T_A = 25 °C	-	1.2	1.5	
		2 V < V_{DDA} < 3.6 V, f_{ADC} = 35 MHz, $f_s \le 2.5$ Msps, T_A = entire range	-	1.2	1.5	
		1.62 V < V_{DDA} < 3.6 V, T_A = entire range, f_{ADC} = 35 MHz, $f_s \le 2.2$ Msps	-	1.2	1.5	
EL	Integral linearity error	V_{DDA} = 3 V, f_{ADC} = 35 MHz, $f_s \le 2.5$ Msps, T_A = 25 °C	-	2.5	3	
		2 V < V_{DDA} < 3.6 V, f_{ADC} = 35 MHz, $f_s \le 2.5$ Msps, T_A = entire range	-	2.5	3	
		1.62 V < V_{DDA} < 3.6 V, T_A = entire range, f_{ADC} = 35 MHz, $f_s \le 2.2$ Msps	-	2.5	3.5	
ENOB	Effective number of bits	V_{DDA} = 3 V, f_{ADC} = 35 MHz, $f_s \le 2.5$ Msps, T_A = 25 °C	10.1	10.2	-	bit
		2 V < V_{DDA} < 3.6 V, f_{ADC} = 35 MHz, $f_s \le 2.5$ Msps, T_A = entire range	9.6	10.2	-	
		1.62 V < V_{DDA} < 3.6 V, T_A = entire range, f_{ADC} = 35 MHz, $f_s \le 2.2$ Msps	9.5	10.2	-	
SINAD	Signal-to-noise and distortion ratio	V_{DDA} = 3 V, f_{ADC} = 35 MHz, $f_s \le 2.5$ Msps, T_A = 25 °C	62.5	63.0	-	dB
		2 V < V_{DDA} < 3.6 V, f_{ADC} = 35 MHz, $f_s \le 2.5$ Msps, T_A = entire range	59.5	63.0	-	
		1.62 V < V_{DDA} < 3.6 V, T_A = entire range, f_{ADC} = 35 MHz, $f_s \le 2.2$ Msps	59.0	63.0	-	

Table 71. ADC accuracy(1)(2)(3) (continued)

Symbol	Parameter	Conditions(4)	Min	Typ	Max	Unit
SNR	Signal-to-noise ratio	V_{DDA} = 3 V, f_{ADC} = 35 MHz, $f_s \le 2.5$ Msps, T_A = 25 °C	63.0	64.0	-	dB
		2 V < V_{DDA} < 3.6 V, f_{ADC} = 35 MHz, $f_s \le 2.5$ Msps, T_A = entire range	60.0	64.0	-	
		1.62 V < V_{DDA} < 3.6 V, T_A = entire range, f_{ADC} = 35 MHz, $f_s \le 2.2$ Msps	60.0	64.0	-	
THD	Total harmonic distortion	V_{DDA} = 3 V, f_{ADC} = 35 MHz, $f_s \le 2.5$ Msps, T_A = 25 °C	-	-74	-73	
		2 V < V_{DDA} < 3.6 V, f_{ADC} = 35 MHz, $f_s \le 2.5$ Msps, T_A = entire range	-	-74	-70	
		1.62 V < V_{DDA} < 3.6 V, T_A = entire range, f_{ADC} = 35 MHz, $f_s \le 2.2$ Msps	-	-74	-70	

1. Based on characterization results, not tested in production.
2. ADC DC accuracy values are measured after internal calibration.
3. Injecting negative current on any analog input pin significantly reduces the accuracy of the A-to-D conversion of signals on another analog input. It is recommended to add a Schottky diode (pin to ground) to analog pins susceptible to receive negative current.
4. I/O analog switch voltage booster is enabled (BOOSTEN = 1 in the SYSCFG_CFGR1) when V_{DDA} < 2.4 V and disabled when $V_{DDA} \ge$ 2.4 V.

Figure 22. ADC accuracy characteristics

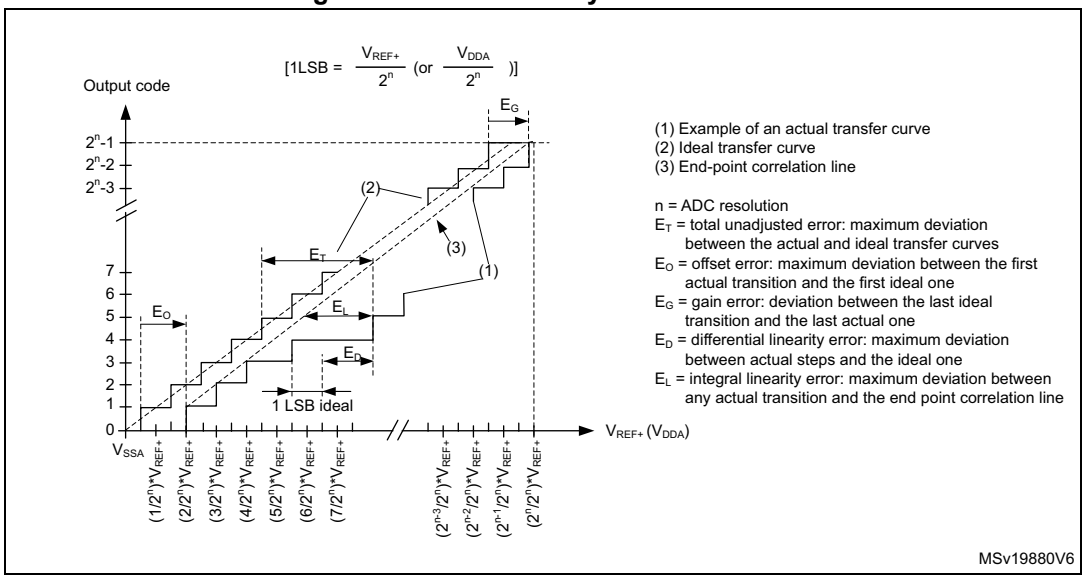

Figure 23. Typical connection diagram when using the ADC with FT/TT pins featuring analog switch function

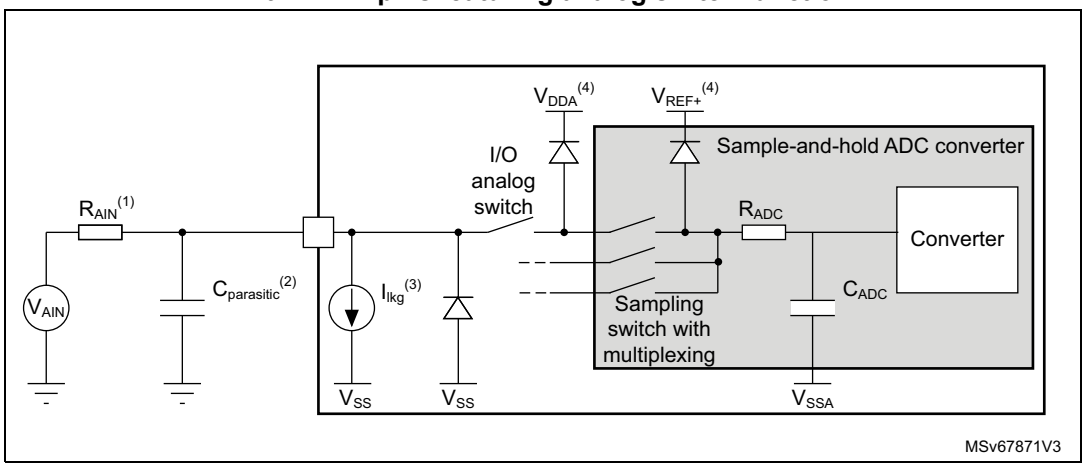

1. Refer to *Table 69: ADC characteristics* for the values of R_{AIN}, R_{ADC} and C_{ADC}.
2. $C_{parasitic}$ represents the capacitance of the PCB (dependent on soldering and PCB layout quality) plus the pad capacitance (refer to *Table 64: I/O static characteristics* for the value of the pad capacitance). A high $C_{parasitic}$ value downgrades the conversion accuracy. To remedy this f_{ADC} must be reduced.
3. Refer to *Table 64: I/O static characteristics* for the values of I_{lkg}.
4. Refer to *Figure 13: Power supply scheme*.

General PCB design guidelines

Power supply decoupling has to be performed as shown in *Figure 13: Power supply scheme*. The 10 nF capacitor must be ceramic (good quality), placed as close as possible to the chip.

6.3.20 Comparator characteristics

Table 72. COMP characteristics(1)

Symbol	Parameter	Conditions		Min	Typ	Max	Unit
V_{DDA}	Analog supply voltage	-		1.62	-	3.6	V
V_{IN}	Comparator input voltage range	-		0	-	V_{DDA}	V
V_{BG}(2)	Scaler input voltage	-		V_{REFINT}			V
V_{SC}	Scaler offset voltage	-		-	±5	±10	mV
I_{DDA}(SCALER)	Scaler static consumption from V_{DDA}	BRG_EN=0 (bridge disable)		-	200	300	nA
		BRG_EN=1 (bridge enable)		-	0.8	1	µA
t_{START_SCALER}	Scaler startup time	-		-	100	200	µs
t_{START}	Comparator startup time to reach propagation delay specification	High-speed mode	$V_{DDA} \geq 2.7$ V	-	-	5	µs
			$V_{DDA} < 2.7$ V	-	-	7	
		Medium mode	$V_{DDA} \geq 2.7$ V	-	-	15	
			$V_{DDA} < 2.7$ V	-	-	25	
		Ultra-low-power mode		-	-	40	

Table 72. COMP characteristics(1) (continued)

Symbol	Parameter	Conditions		Min	Typ	Max	Unit
t_D(3)	Propagation delay with 100 mV overdrive	High-speed mode	V_{DDA} ≥ 2.7 V	-	55	80	ns
			V_{DDA} < 2.7 V	-	55	100	
		Medium mode		-	0.55	0.9	µs
		Ultra-low-power mode		-	4	7	
V_{offset}	Comparator offset error	Full common mode range		-	±5	±20	mV
V_{hys}	Comparator hysteresis	No hysteresis		-	0	-	mV
		Low hysteresis		-	8	-	
		Medium hysteresis		-	15	-	
		High hysteresis		-	27	-	
I_{DDA}(COMP)	Comparator consumption from V_{DDA}	Ultra-low-power mode	Static	-	400	600	nA
			With 50 kHz ±100 mV overdrive square signal	-	1200	-	
		Medium mode	Static	-	5	7	µA
			With 50 kHz ±100 mV overdrive square signal	-	6	-	
		High-speed mode	Static	-	70	100	
			With 50 kHz ±100 mV overdrive square signal	-	75	-	

1. Specified by design, not tested in production, unless otherwise specified.
2. Refer to *Table 30: Embedded internal voltage reference*.
3. Evaluated by characterization, not tested in production.

6.3.21 Temperature sensor characteristics

Table 73. TS characteristics

Symbol	Parameter	Min	Typ	Max	Unit
T_L(1)	V_{TS} linearity with temperature	-	±1	±2	°C
Avg_Slope(2)	Average slope	2.3	2.5	2.7	mV / °C
V_{30}	Voltage at 30 °C (±5 °C)(3)	0.742	0.760	0.785	V
t_{START}(TS_BUF)(1)	Sensor buffer start-up time in continuous mode(4)	-	8	15	µs
t_{START}(1)	Start-up time when entering in continuous mode(4)	-	70	120	
t_{S_temp}(1)	ADC sampling time when reading the temperature	5	-	-	
I_{DD}(TS)(1)	Temperature sensor consumption from V_{DD}, when selected by ADC	-	4.7	7	µA

1. Specified by design, not tested in production.
2. Evaluated by characterization, not tested in production.

3. Measured at V_{DDA} = 3.0 V ±10 mV. The V_{30} ADC conversion result is stored in the TS_CAL1 byte. Refer to *Table 10: Temperature sensor calibration values*.
4. Continuous mode means Run/Sleep modes, or temperature sensor enabled in Low-power run / Low-power sleep modes.

6.3.22 V_{BAT} monitoring characteristics

Table 74. V_{BAT} monitoring characteristics(1)

Symbol	Parameter	Min	Typ	Max	Unit
R	Resistor bridge for V_{BAT}	-	3 x 39	-	kΩ
Q	Ratio on V_{BAT} measurement	-	3	-	-
Er(2)	Error on Q	-10	-	10	%
t_{S_vbat}(2)	ADC sampling time when reading the VBAT	12	-	-	µs

1. 1.55 V < V_{BAT} < 3.6 V.
2. Specified by design, not tested in production.

Table 75. V_{BAT} charging characteristics

Symbol	Parameter	Conditions	Min	Typ	Max	Unit
R_{BC}	Battery charging resistor	VBRS = 0	-	5	-	kΩ
		VBRS = 1	-	1.5	-	

6.3.23 SMPS step-down converter characteristics

The SMPS step-down converter characteristic are given at 4 MHz clock, with a 20 mA load (unless otherwise specified), using a 10 µH inductor and a 4.7 µF capacitor.

6.3.24 Timer characteristics

The parameters given in the following tables are specified by design, not tested in production. Refer to *Section 6.3.16* for details on the input/output alternate function characteristics (output compare, input capture, external clock, PWM output).

Table 76. TIMx(1) characteristics

Symbol	Parameter	Conditions	Min	Max	Unit
$t_{res(TIM)}$	Timer resolution time	-	1	-	$t_{TIMxCLK}$
		$f_{TIMxCLK}$ = 64 MHz	15.625	-	ns
f_{EXT}	Timer external clock frequency on CH1 to CH4	-	0	$f_{TIMxCLK}/2$	MHz
		$f_{TIMxCLK}$ = 64 MHz	0	40	
Res_{TIM}	Timer resolution	TIM1	-	16	bit
		TIM2	-	32	
$t_{COUNTER}$	16-bit counter clock period	-	1	65536	$t_{TIMxCLK}$
		$f_{TIMxCLK}$ = 64 MHz	0.015625	1024	µs

Table 76. TIMx(1) characteristics (continued)

Symbol	Parameter	Conditions	Min	Max	Unit
t_{MAX_COUNT}	Maximum possible count with 32-bit counter	-	-	65536 × 65536	$t_{TIMxCLK}$
		$f_{TIMxCLK}$ = 64 MHz	-	67.10	s

1. TIMx, is used as a general term where x stands for 1 or 2.

Table 77. IWDG min/max timeout period at 32 kHz (LSI1)(1)

Prescaler divider	PR[2:0] bits	Min timeout RL[11:0] = 0x000	Max timeout RL[11:0] = 0xFFF	Unit
/4	0	0.125	512	ms
/8	1	0.250	1024	
/16	2	0.500	2048	
/32	3	1.0	4096	
/64	4	2.0	8192	
/128	5	4.0	16384	
/256	6 or 7	8.0	32768	

1. The exact timings still depend on the phasing of the APB interface clock vs. the LSI clock, hence there is always a full RC period of uncertainty.

6.3.25 Communication interfaces characteristics

I²C interface characteristics

The I2C interface meets the timings requirements of the I²C-bus specification and user manual rev. 03 for:

- Standard-mode (Sm): bit rate up to 100 kbit/s
- Fast-mode (Fm): bit rate up to 400 kbit/s
- Fast-mode Plus (Fm+): bit rate up to 1 Mbit/s.

Table 78. Minimum I2CCLK frequency in all I²C modes

Symbol	Parameter	Condition		Min	Unit
$f_{(I2CCLK)}$	I2CCLK frequency	Standard-mode	-	2	MHz
		Fast-mode	Analog filter ON, DNF = 0	8	
			Analog filter OFF, DNF = 1	9	
		Fast-mode Plus	Analog filter ON, DNF = 0	18	
			Analog filter OFF, DNF = 1	16	

The I2C timings requirements are guaranteed by design when the I2C peripheral is properly configured (refer to the reference manual RM0473).

The SDA and SCL I/O requirements are met with the following restriction: the SDA and SCL I/O pins are not “true” open-drain. When configured as open-drain, the PMOS connected between the I/O pin and V_{DD} is disabled, but is still present. The 20 mA output drive requirement in Fast-mode Plus is supported partially.

This limits the maximum load C_{load} supported in Fast-mode Plus, given by these formulas:

- $t_r(SDA/SCL) = 0.8473 \times R_p \times C_{load}$
- $R_p(min) = [V_{DD} - V_{OL}(max)] / I_{OL}(max)$

where R_p is the I2C lines pull-up. Refer to *Section 6.3.16* for the I2C I/Os characteristics.

All I2C SDA and SCL I/Os embed an analog filter, refer to *Table 79* for its characteristics.

Table 79. I2C analog filter characteristics(1)

Symbol	Parameter	Min	Max	Unit
t_{AF}	Maximum pulse width of spikes that are suppressed by the analog filter	50(2)	100(3)	ns

1. Specified by design, not tested in production.
2. Spikes with widths below $t_{AF(min)}$ are filtered.
3. Spikes with widths above $t_{AF(max)}$ are not filtered

SPI characteristics

Unless otherwise specified, the parameters given in *Table 80* are derived from tests performed under the ambient temperature, f_{PCLKx} frequency and supply voltage conditions summarized in *Table 21: General operating conditions*.

- Output speed is set to OSPEEDRy[1:0] = 11
- Capacitive load C = 30 pF
- Measurement points are set at CMOS levels: 0.5 x V_{DD}

Refer to *Section 6.3.16* for more details on the input/output alternate function characteristics (NSS, SCK, MOSI, MISO for SPI).

Table 80. SPI characteristics(1)

Symbol	Parameter	Conditions	Min	Typ	Max	Unit
f_{SCK} $1/t_{c(SCK)}$	SPI clock frequency	Master mode $1.71 < V_{DD} < 3.6$ V	-	-	32	MHz
		Slave receiver mode $1.71 < V_{DD} < 3.6$ V			32	
		Slave mode transmitter/full duplex $2.7 < V_{DD} < 3.6$ V			32(2)	
		Slave mode transmitter/full duplex $1.71 < V_{DD} < 3.6$ V			24(2)	
$t_{su(NSS)}$	NSS setup time	Slave mode, SPI prescaler = 2	$4xT_{PCLK}$	-	-	-
$t_{h(NSS)}$	NSS hold time	Slave mode, SPI prescaler = 2	$2xT_{PCLK}$	-	-	
$t_{w(SCKH)}$ $t_{w(SCKL)}$	SCK high and low time	Master mode	$T_{PCLK} - 1.5$	T_{PCLK}	$T_{PCLK} + 1$	

Table 80. SPI characteristics(1) (continued)

Symbol	Parameter	Conditions	Min	Typ	Max	Unit
$t_{su(MI)}$	Data input setup time	Master mode	6.5	-	-	ns
$t_{su(SI)}$		Slave mode	1.5	-	-	
$t_{h(MI)}$	Data input hold time	Master mode	4.5	-	-	
$t_{h(SI)}$		Slave mode	1.5	-	-	
$t_{a(SO)}$	Data output access time	Slave mode	9	-	34	
$t_{dis(SO)}$	Data output disable time		9	-	16	
$t_{v(SO)}$	Data output valid time	Slave mode 2.7 < V_{DD} < 3.6 V	-	10.5	13	
		Slave mode 1.71 < V_{DD} < 3.6 V	-	10.5	20.5	
$t_{v(MO)}$		Master mode (after enable edge)	-	2.5	3.0	
$t_{h(SO)}$	Data output hold time	Slave mode (after enable edge)	8	-	-	
$t_{h(MO)}$		Master mode (after enable edge)	1.0	-	-	

1. Evaluated by characterization, not tested in production.
2. Maximum frequency in Slave transmitter mode is determined by the sum of $t_{v(SO)}$ and $t_{su(MI)}$, which has to fit into SCK low or high phase preceding the SCK sampling edge. This value can be achieved when the SPI communicates with a master having $t_{su(MI)}$ = 0 while Duty(SCK) = 50 %.

Figure 24. SPI timing diagram - Slave mode and CPHA = 0

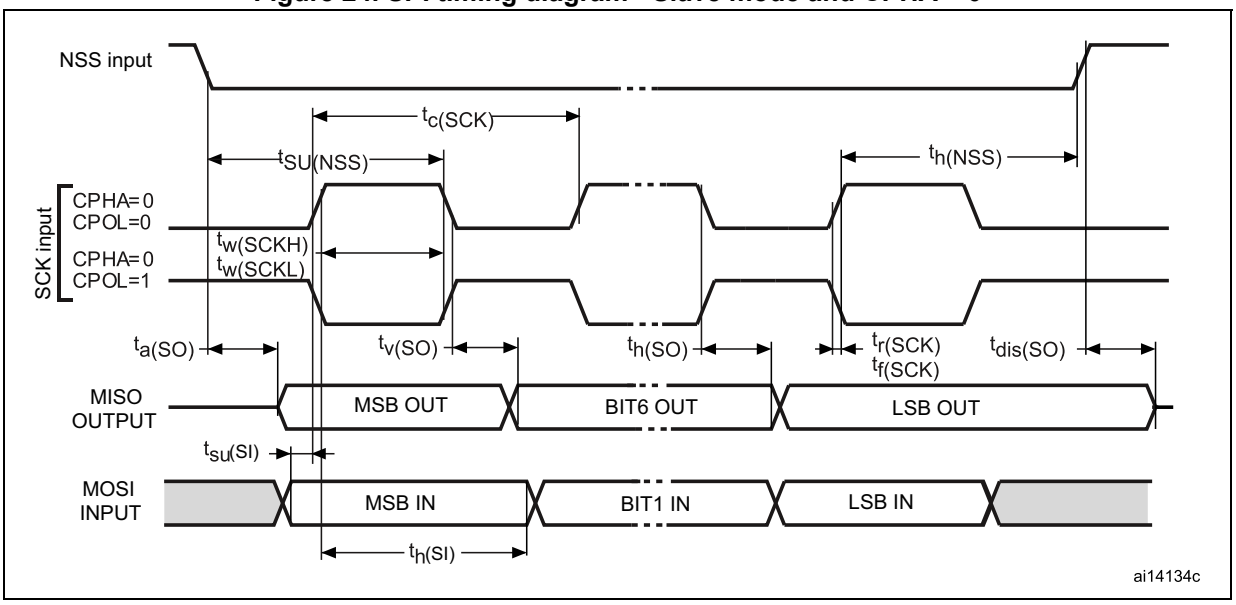

Figure 25. SPI timing diagram - Slave mode and CPHA = 1

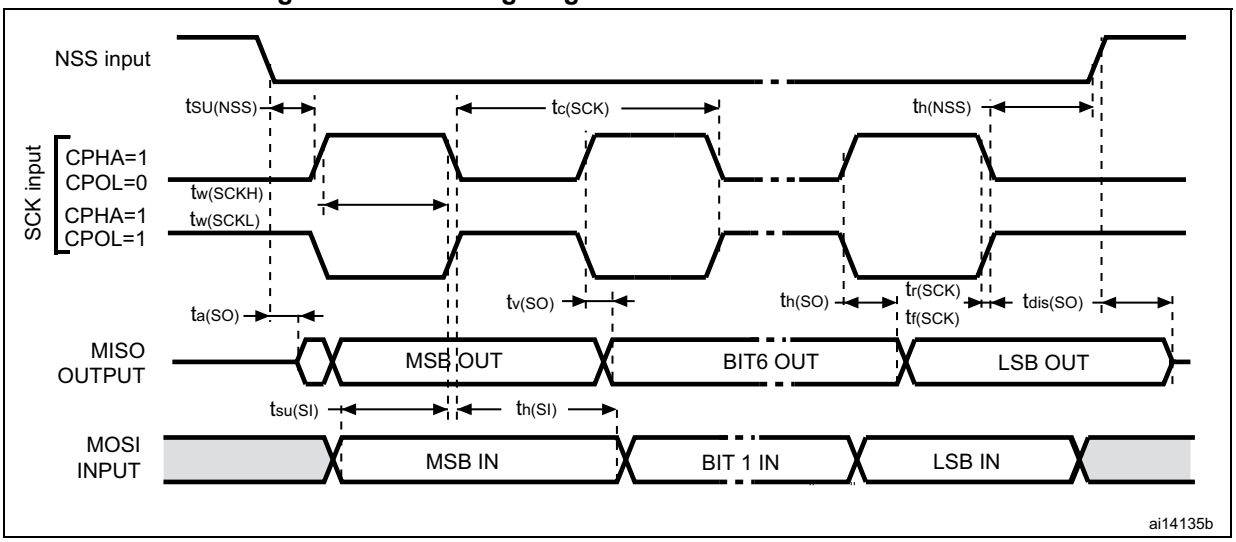

1. Measurement points are set at CMOS levels: 0.3 V_{DD} and 0.7 V_{DD}.

Figure 26. SPI timing diagram - Master mode

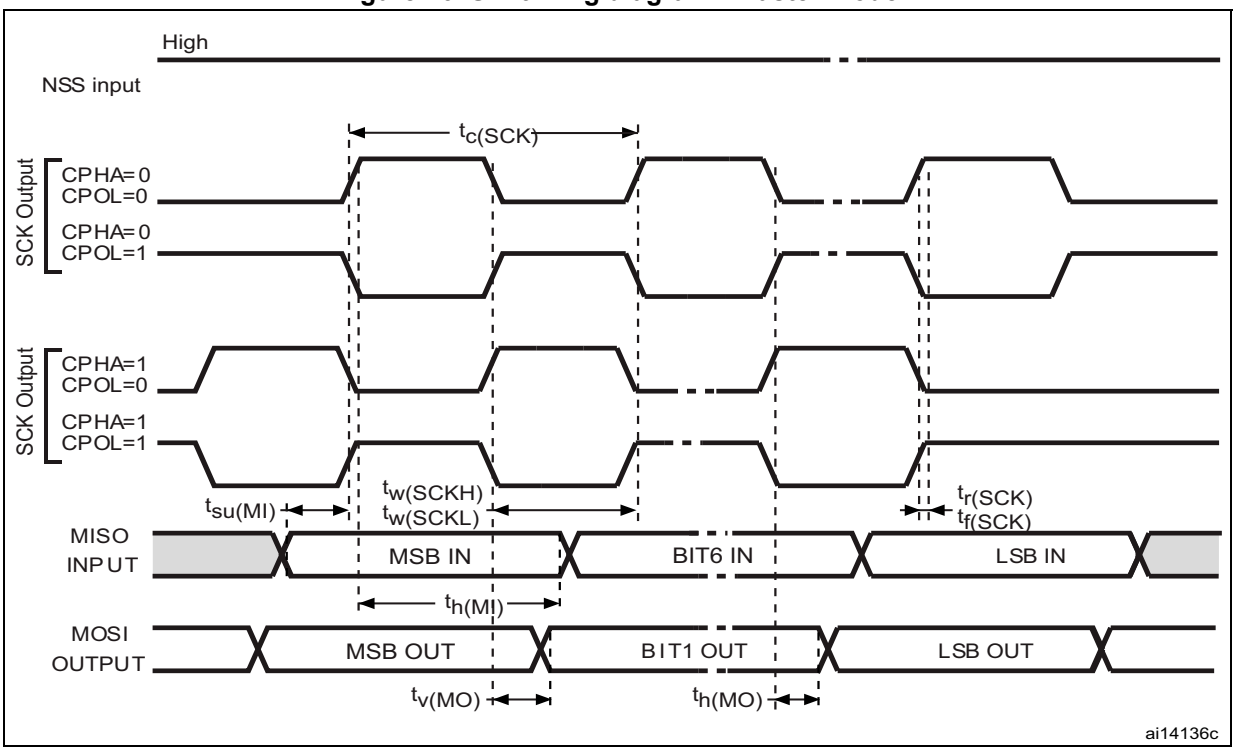

1. Measurement points are set at CMOS levels: 0.3 V_{DD} and 0.7 V_{DD}.

JTAG/SWD interface characteristics

Unless otherwise specified, the parameters given in *Table 81* and *Table 82* are derived from tests performed under the ambient temperature, f_{PCLKx} frequency and supply voltage

conditions summarized in *Table 21: General operating conditions*. with the following configuration:

- Capacitive load C = 30 pF
- Measurement points are set at CMOS levels: $0.5 \times V_{DD}$

Table 81. JTAG characteristics

Symbol	Parameter	Conditions	Min	Typ	Max	Unit
$1/t_{c(TCK)}$	TCK clock frequency	$2.7 < V_{DD} < 3.6$ V	-	-	29	MHz
		$1.71 < V_{DD} < 3.6$ V	-	-	21	
$t_{isu(TMS)}$	TMS input setup time	-	2.5	-	-	ns
$t_{ih(TMS)}$	TMS input hold time	-	2.0	-	-	
$t_{isu(TDI)}$	TDI input setup time	-	2.0	-	-	
$t_{ih(TDI)}$	TDI input hold time	-	2.0	-	-	
$t_{ov(TDO)}$	TDO output valid time	$2.7 < V_{DD} < 3.6$ V	-	13.5	16.5	
		$1.71 < V_{DD} < 3.6$ V	-	13.5	23	
$t_{oh(TDO)}$	TDO output hold time	-	11	-	-	

Table 82. SWD characteristics

Symbol	Parameter	Conditions	Min	Typ	Max	Unit
$1/t_{c(SWCLK)}$	SWCLK clock frequency	$2.7 < V_{DD} < 3.6$ V	-	-	55	MHz
		$1.71 < V_{DD} < 3.6$ V	-	-	35	
$t_{isu(TMS)}$	SWDIO input setup time	-	2.5	-	-	ns
$t_{ih(TMS)}$	SWDIO input hold time	-	2.0	-	-	
$t_{ov(TDO)}$	SWDIO output valid time	$2.7 < V_{DD} < 3.6$ V	-	16	18	
		$1.71 < V_{DD} < 3.6$ V	-	16	28	
$t_{oh(TDO)}$	SWDIO output hold time	-	13	-	-	

Refer to *Section 6.3.16* for more details on the input/output alternate function characteristics (CK, SD, WS).

7 Package information

In order to meet environmental requirements, ST offers these devices in different grades of ECOPACK packages, depending on their level of environmental compliance. ECOPACK specifications, grade definitions and product status are available at: *www.st.com*. ECOPACK is an ST trademark.

7.1 UFQFPN48 package information

UFQFPN48 is a 48-lead, 7 x 7 mm, 0.5 mm pitch, ultra thin fine pitch quad flat package.

Figure 27. UFQFPN48 outline

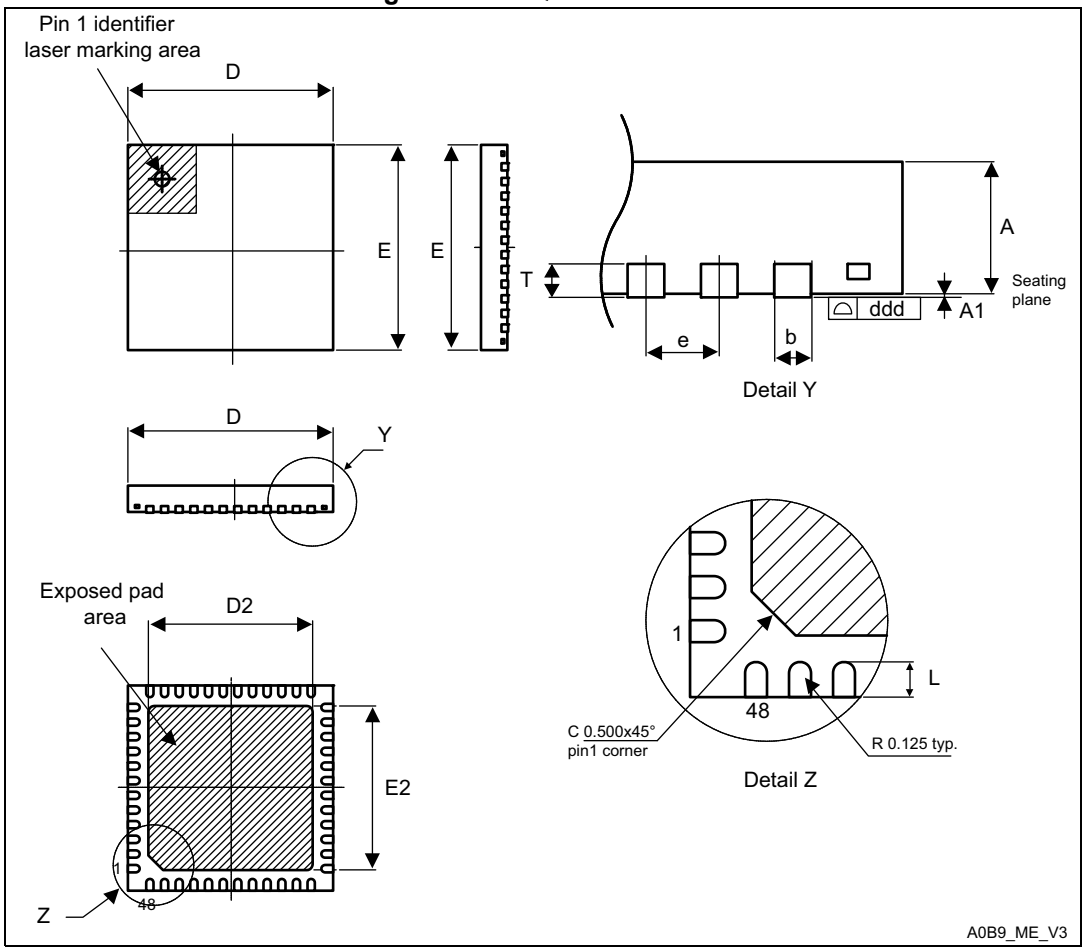

1. Drawing is not to scale.
2. All leads/pads should also be soldered to the PCB to improve the lead/pad solder joint life.
3. There is an exposed die pad on the underside of the UFQFPN package, it must be electrically connected to the PCB ground.

Table 83. UFQFPN48 mechanical data

Symbol	millimeters			inches[1]		
	Min	Typ	Max	Min	Typ	Max
A	0.500	0.550	0.600	0.0197	0.0217	0.0236
A1	0.000	0.020	0.050	0.0000	0.0008	0.0020
D	6.900	7.000	7.100	0.2717	0.2756	0.2795
E	6.900	7.000	7.100	0.2717	0.2756	0.2795
D2	5.500	5.600	5.700	0.2165	0.2205	0.2244
E2	5.500	5.600	5.700	0.2165	0.2205	0.2244
L	0.300	0.400	0.500	0.0118	0.0157	0.0197
T	-	0.152	-	-	0.0060	-
b	0.200	0.250	0.300	0.0079	0.0098	0.0118
e	-	0.500	-	-	0.0197	-
ddd	-	-	0.080	-	-	0.0031

1. Values in inches are converted from mm and rounded to four decimal digits.

Figure 28. UFQFPN48 recommended footprint

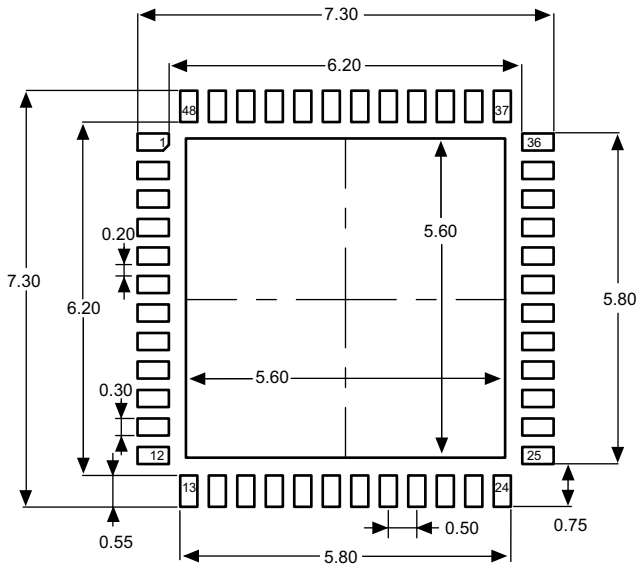

1. Dimensions are expressed in millimeters.

Device marking for UFQFPN48

Figure 29 gives an example of topside marking orientation versus pin 1 identifier location. The printed markings may differ depending on the supply chain.

Other optional marking or inset/upset marks, which identify the parts throughout supply chain operations, are not indicated below.

Figure 29. UFQFPN48 marking example (package top view)

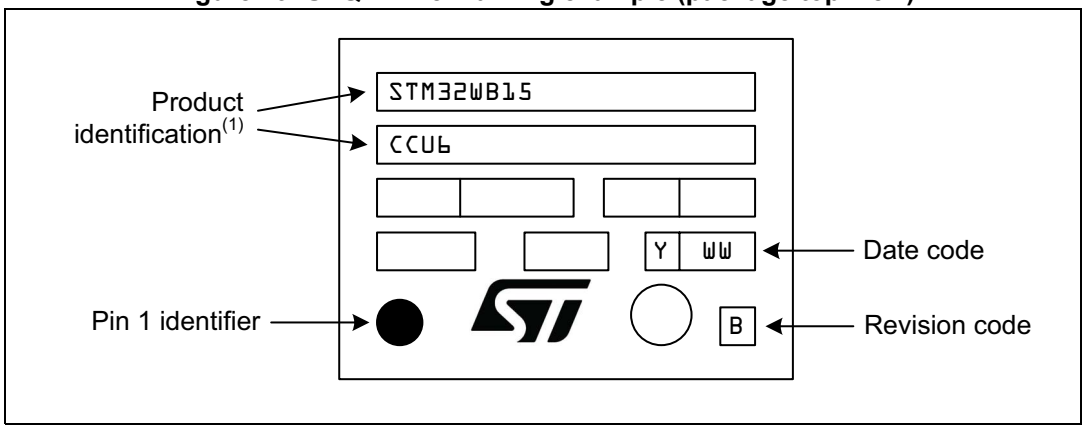

1. Parts marked as “ES”, “E” or accompanied by an Engineering Sample notification letter, are not yet qualified and therefore not yet ready to be used in production and any consequences deriving from such usage will not be at ST charge. In no event, ST will be liable for any customer usage of these engineering samples in production. ST Quality has to be contacted prior to any decision to use these Engineering samples to run qualification activity.

7.2 WLCSP49 package information

This WLCSP is a 49-ball, 3.30 x 3.38 mm, 0.4 mm pitch, wafer level chip scale package.

Figure 30. WLCSP49 outline

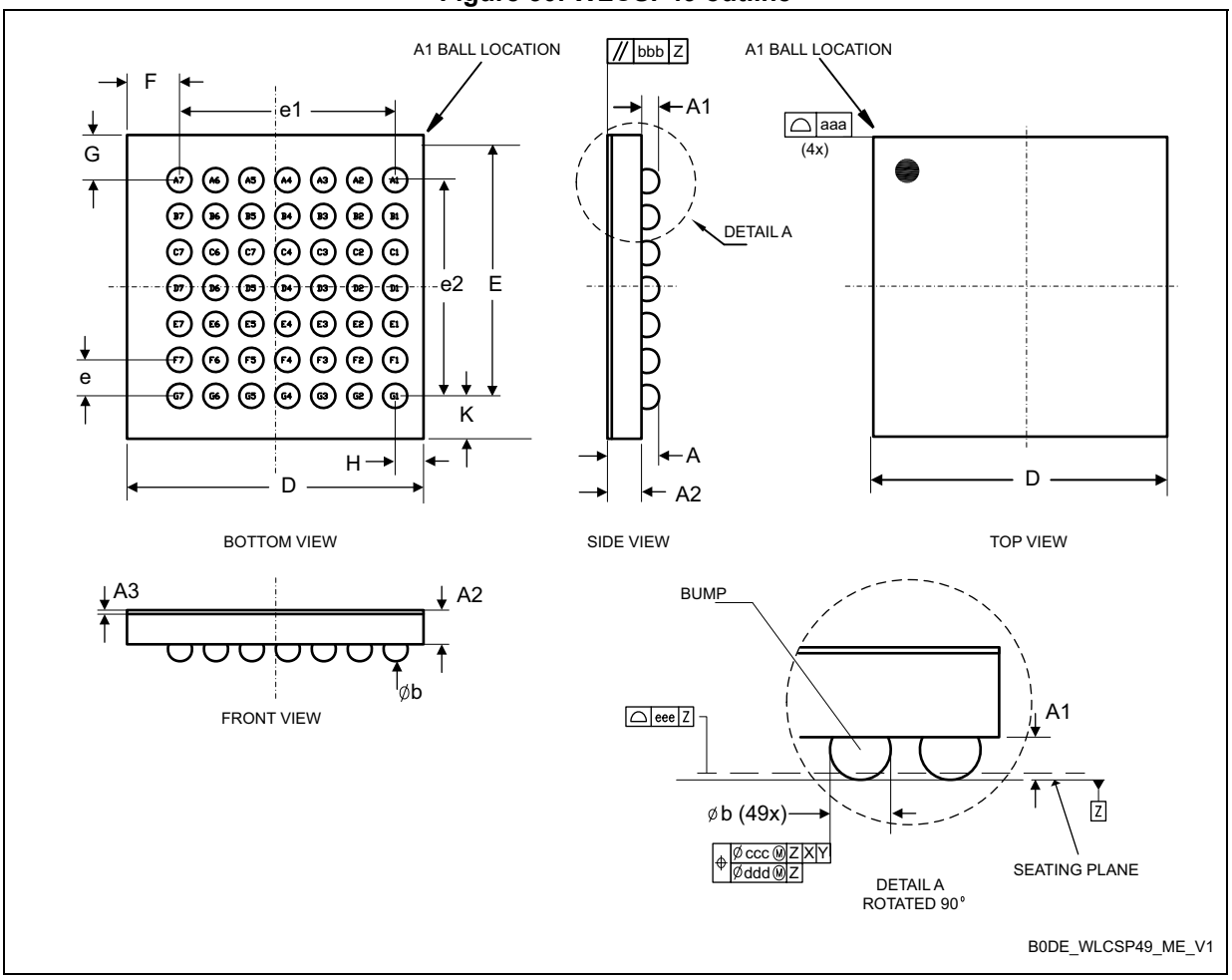

1. Drawing is not to scale.
2. Dimension is measured at the maximum bump diameter parallel to primary datum Z.
3. Primary datum Z and seating plane are defined by the spherical crowns of the bump.
4. Bump position designation per JESD 95-1, SPP-010.

Table 84. WLCSP49 mechanical data

Symbol	millimeters			inches[1]		
	Min	Typ	Max	Min	Typ	Max
A[2]	-	-	0.59	-	-	0.023
A1	-	0.18	-	-	0.007	-
A2	-	0.38	-	-	0.015	-
A3[3]	-	0.025	-	-	0.001	-
b	0.22	0.25	0.28	0.009	0.010	0.011
D	3.28	3.30	3.32	0.129	0.130	0.131
E	3.36	3.38	3.39	0.132	0.133	0.133
e	-	0.40	-	-	0.016	-
e1	-	2.40	-	-	0.094	-
e2	-	2.40	-	-	0.094	-
F[4]	-	0.579	-	-	0.023	-
G[4]	-	0.502	-	-	0.020	-
H	-	0.321	-	-	0.013	-
K	-	0.478	-	-	0.019	-
aaa	-	-	0.10	-	-	0.004
bbb	-	-	0.10	-	-	0.004
ccc	-	-	0.10	-	-	0.004
ddd	-	-	0.05	-	-	0.002
eee	-	-	0.05	-	-	0.002

1. Values in inches are converted from mm and rounded to four decimal digits.
2. The maximum total package height is calculated by the RSS method (Root Sum Square) using nominal and tolerances values of A1 and A2.
3. Back side coating. Nominal dimension is rounded to the third decimal place resulting from process capability.
4. Calculated dimensions are rounded to the third decimal place.

Figure 31. WLCSP49 recommended footprint

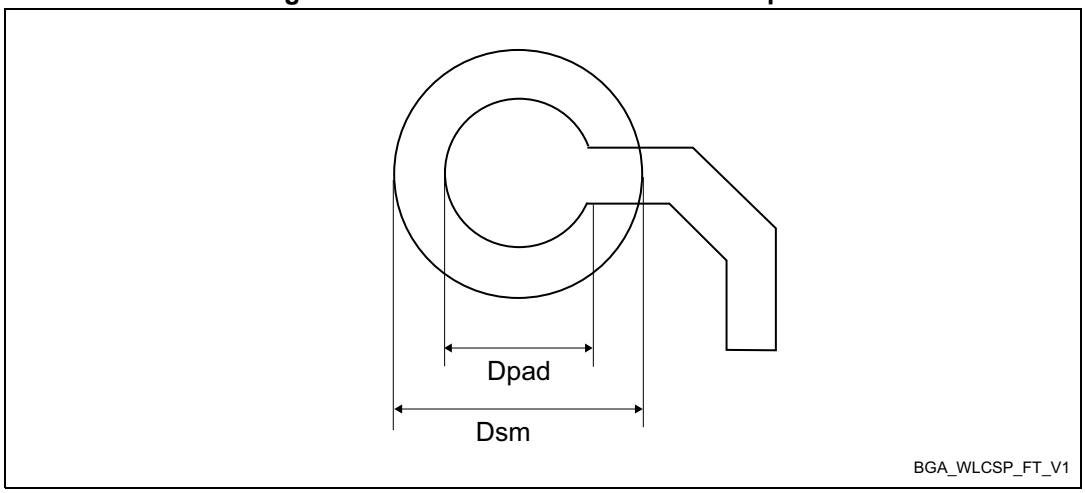

1. Dimensions are expressed in millimeters.

Table 85. WLCSP49 recommended PCB design rules

Dimension	Recommended values
Pitch	0.4 mm
Dpad	0,225 mm
Dsm	0.290 mm typ. (depends on soldermask registration tolerance)
Stencil opening	0.250 mm
Stencil thickness	0.100 mm

7.3 Thermal characteristics

The maximum chip junction temperature ($T_J$max) must never exceed the values given in *Table 24: General operating conditions*.

The maximum chip-junction temperature, T_J max, in degrees Celsius, can be calculated using the equation:

$$T_J \text{ max} = T_A \text{ max} + (P_D \text{ max} \times \Theta_{JA})$$

where:

- T_A max is the maximum ambient temperature in °C,
- Θ_{JA} is the package junction-to-ambient thermal resistance, in °C / W,
- P_D max is the sum of P_{INT} max and $P_{I/O}$ max (P_D max = P_{INT} max + $P_{I/O}$ max),
- P_{INT} max is the product of I_{DD} and V_{DD}, expressed in Watt. This is the maximum chip internal power.

$P_{I/O}$ max represents the maximum power dissipation on output pins:

- $P_{I/O}$ max = $\Sigma (V_{OL} \times I_{OL}) + \Sigma ((V_{DD} - V_{OH}) \times I_{OH})$

taking into account the actual V_{OL} / I_{OL} and V_{OH} / I_{OH} of the I/Os at low and high level in the application.

Note: As the radiated RF power is quite low (< 4 mW), it is not necessary to remove it from the chip power consumption.

Note: RF characteristics (such as sensitivity, Tx power, consumption) are provided up to 85 °C.

Table 86. Package thermal characteristics

Symbol	Parameter	Value	Unit
Θ_{JA}	**Thermal resistance junction-ambient** UFQFPN48 - 7 mm x 7 mm	27.7	°C / W
	Thermal resistance junction-ambient WLCSP49 - 0.4 mm pitch	45.5	
Θ_{JB}	**Thermal resistance junction-board** UFQFPN48 - 7 mm x 7 mm	12.0	
	Thermal resistance junction-board WLCSP49 - 0.4 mm pitch	NA	
Θ_{JC}	**Thermal resistance junction-case** UFQFPN48 - 7 mm x 7 mm	9.7	
	Thermal resistance junction-case WLCSP49 - 0.4 mm pitch	NA	

7.3.1 Reference document

JESD51-2 Integrated Circuits Thermal Test Method Environment Conditions - Natural Convection (Still Air). Available from www.jedec.org

7.3.2 Selecting the product temperature range

When ordering the microcontroller, the temperature range is specified in the information scheme shown in *Section 8*.

Each temperature range suffix corresponds to a specific guaranteed ambient temperature at maximum dissipation and to a specific maximum junction temperature.

As applications do not commonly use the device at maximum dissipation, it is useful to calculate the exact power consumption and junction temperature to determine the temperature range that best suits the application.

The following examples show how to calculate the temperature range needed for a given application.

Example 1: High-performance application

Assuming the following application conditions:

Maximum ambient temperature T_A max = 82 °C (measured according to JESD51-2), I_{DD} max = 50 mA, V_{DD} = 3.5 V, maximum 20 I/Os used at the same time in output at low level with I_{OL} = 8 mA, V_{OL} = 0.4 V and maximum 8 I/Os used at the same time in output at low level with I_{OL} = 20 mA, V_{OL}= 1.3 V

P_{INT} max = 50 mA × 3.5 V = 175 mW

P_{IO} max = 20 × 8 mA × 0.4 V + 8 × 20 mA × 1.3 V = 272 mW

This gives: P_{INT} max = 175 mW and P_{IO} max = 272 mW

P_D max = 175 + 272 = 447 mW

Using the values obtained in *Table 86* T_J max is calculated as follows:

– For UFQFPN48, 27.7 °C / W

T_J max = 82 °C + (27.7 °C / W × 447 mW) = 82 °C + 12 °C = 94 °C

This is within the range of the suffix 6 version parts (–40 < T_J < 105 °C), see *Section 8*.

In this case, parts must be ordered at least with the temperature range suffix 6.

Note: With this given P_D max user can find the T_A max allowed for a given device temperature range (order code suffix 7).

Suffix 7: T_A max = T_J max - (27.7 C / W × 447 mW) = 125 °C - 12 °C = 113 °C

Example 2: High-temperature application

Using the same rules, it is possible to address applications running at high ambient temperatures with a low dissipation, as long as junction temperature T_J remains within the specified range.

Assuming the following application conditions:

Maximum ambient temperature T_A max = 102 °C (measured according to JESD51-2), I_{DD} max = 20 mA, V_{DD} = 3.5 V, maximum 20 I/Os used at the same time in output at low level with I_{OL} = 8 mA, V_{OL}= 0.4 V

P_{INT} max = 20 mA × 3.5 V = 70 mW

P_{IO} max = 20 × 8 mA × 0.4 V = 64 mW

This gives: P_{INTmax} = 70 mW and P_{IO} max = 64 mW

P_D max = 70 + 64 = 134 mW

Thus: P_D max = 134 mW

Using the values obtained in *Table 86* T_J max is calculated as follows:

– For UFQFPN48, 27.7 °C / W

T_J max = 102 °C + (27.7 °C / W × 134 mW) = 102 °C + 4 °C = 106 °C

This is above the range of the suffix 6 version parts (–40 < T_J < 105 °C).

In this case, parts must be ordered at least with the temperature range suffix 7 (see *Section 8*), unless user reduces the power dissipation to be able to use suffix 6 parts.

8 Ordering information

Example: STM32 WB 15 C C U 6 E TR

Device family

STM32 = Arm® based 32-bit microcontroller

Product type

WB = Wireless Bluetooth®

Device subfamily

15 = Die 1, full set of features

Pin count

C = 48 pins or 49 balls

Flash memory size

C = 320 Kbytes

Package

U = UFQFPN48 7 x 7 mm

Y = WLCSP49 0.4 mm pitch

Temperature range

6 = Industrial temperature range, -40 to 85 °C (105 °C junction)

7 = Industrial temperature range, -40 to 105 °C (125 °C junction)

Specificity

E: extended IOs option available with UFQFPN48 package

Packing

TR = tape and reel

xxx = programmed parts

9 Revision history

Table 87. Document revision history

Date	Revision	Changes
19-Feb-2021	1	Initial release.
07-Jun-2021	2	Added WLCSP49 package, hence updated image on cover page and added *Figure 10: STM32WB15CCY WLCSP49 pinout* (1) and *Section 7.2: WLCSP49 package information*. Updated *Section 2: Description*, *Section 3.6.2: BLE general description*, *Section 3.7.5: Low-power modes*, *Section 3.10: Clocks and startup*, *Section 6.1.6: Power supply scheme*, *Section 6.3.9: External clock source characteristics* and *Section 8: Ordering information*. Updated *Table 1: STM32WB15CC device features and peripheral counts*, *Table 6: Functionalities depending on system operating mode*, *Table 7: STM32WB15CC modes overview*, *Table 15: STM32WB15CC pin definitions*, *Table 17: Voltage characteristics*, footnote *1* of *Table 18*, *Table 20: Main performance at VDD = 3.3 V* and its footnote *2*, *Table 21: General operating conditions*, *Table 23: RF transmitter BLE characteristics (1 Mbps)* and its footnote *2*, *Table 24: RF transmitter BLE characteristics (2 Mbps)* and its footnote *2*, *Table 27: RF BLE power consumption for VDD = 3.3 V*, *Table 37: Current consumption in Stop 1 mode*, *Table 38: Current consumption in Stop 0 mode*, *Table 39: Current consumption in Standby mode*, *Table 44: Low-power mode wakeup timings*, *Table 45: Regulator modes transition times*, *Table 46: Wakeup time using USART / LPUART*, *Table 48: HSE clock source requirements* and its footnotes, *Table 49: HSE oscillator characteristics*, *Table 55: LSI2 oscillator characteristics* and its footnote *3*, *Table 64: I/O static characteristics* and *Table 86: Package thermal characteristics*. Updated *Figure 2: STM32WB15CC RF front-end block diagram*, *Figure 7: Clock tree*, *Figure 22: ADC accuracy characteristics*, *Figure 23: Typical connection diagram when using the ADC with FT/TT pins featuring analog switch function* and its footnotes. Minor text edits across the whole document.
25-Jun-2021	3	Removed WLCSP49 package, hence updated image on cover page and removed former *Figure 10* and *Section 7.2*. Updated *Section 2: Description* and *Section 8: Ordering information*. Updated *Table 1: STM32WB15CC device features and peripheral counts*, *Table 15: STM32WB15CC pin definitions*, *Table 21: General operating conditions* and *Table 86: Package thermal characteristics*. Updated *Figure 2: STM32WB15CC RF front-end block diagram*.
10-Aug-2021	4	Added WLCSP49 package, hence updated image on cover page and added *Figure 10: STM32WB15CCY WLCSP49 pinout* (1) and *Section 7.2: WLCSP49 package information*. Updated *Section 2: Description* and *Section 8: Ordering information*. Updated *Table 1: STM32WB15CC device features and peripheral counts*, *Table 15: STM32WB15CC pin definitions*, *Table 21: General operating conditions* and *Table 86: Package thermal characteristics*. Updated *Figure 2: STM32WB15CC RF front-end block diagram*.

IMPORTANT NOTICE – PLEASE READ CAREFULLY

STMicroelectronics NV and its subsidiaries (“ST”) reserve the right to make changes, corrections, enhancements, modifications, and improvements to ST products and/or to this document at any time without notice. Purchasers should obtain the latest relevant information on ST products before placing orders. ST products are sold pursuant to ST’s terms and conditions of sale in place at the time of order acknowledgement.

Purchasers are solely responsible for the choice, selection, and use of ST products and ST assumes no liability for application assistance or the design of Purchasers’ products.

No license, express or implied, to any intellectual property right is granted by ST herein.

Resale of ST products with provisions different from the information set forth herein shall void any warranty granted by ST for such product.

ST and the ST logo are trademarks of ST. For additional information about ST trademarks, please refer to *www.st.com/trademarks*. All other product or service names are the property of their respective owners.

Information in this document supersedes and replaces information previously supplied in any prior versions of this document.

© 2021 STMicroelectronics – All rights reserved