STPS10SM80C

Power Schottky rectifier

Features

- High junction temperature capability
- Optimized trade-off between leakage current and forward voltage drop
- Low leakage current
- Avalanche capability specified
- Insulated package TO-220FPAB
  - insulated voltage: 2000 V
  - package capacitance: 45 pF

Description

This dual diode Schottky rectifier is suited for high frequency switch mode power supply.

Packaged in TO-220AB, I^2PAK, D^2PAK and TO-220FPAB, this device is particularly suited for use in notebook, game station, LCD TV and desktop adapters, providing these applications with a good efficiency at both low and high load.

Table 1. Device summary

Symbol	Value
$I_{F(AV)}$	2 x 5 A
V_{RRM}	80 V
T_j (max)	175 °C
V_F (typ)	485 mV

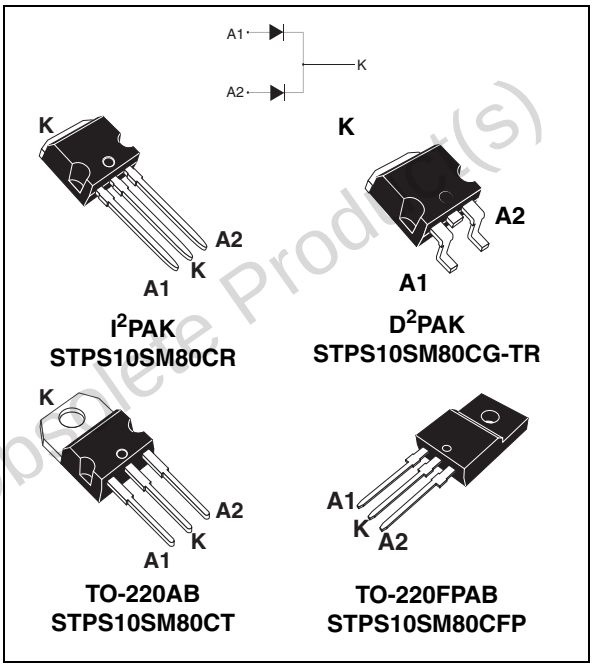

Figure 1. Electrical characteristics(a)

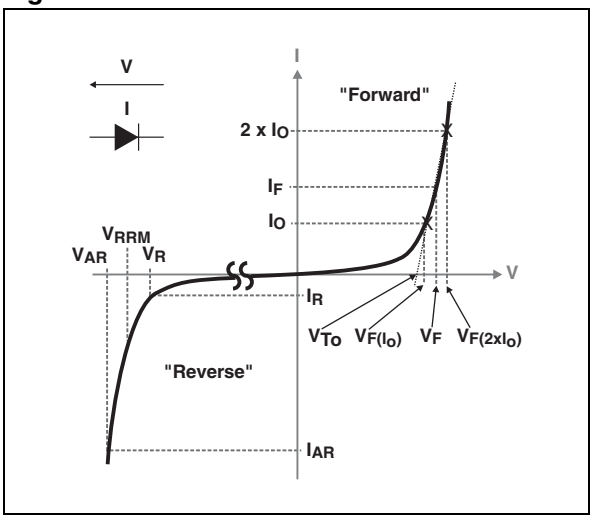

a. V_{ARM} and I_{ARM} must respect the reverse safe operating area defined in *Figure 13*. V_{AR} and I_{AR} are pulse measurements (t_p < 1 µs). V_R, I_R, V_{RRM} and V_F, are static characteristics

Obsolete Product(s) - Obsolete Product(s)

1 Characteristics

Table 2. Absolute ratings (limiting values, per diode, at T_{amb} = 25 °C unless otherwise specified)

Symbol	Parameter				Value	Unit
V_{RRM}	Repetitive peak reverse voltage				80	V
$I_{F(RMS)}$	Forward rms current				30	A
$I_{F(AV)}$	Average forward current, δ = 0.5	TO-220AB, I^2PAK, D^2PAK	T_c = 160 °C T_c = 160 °C	Per diode Per device	5 10	A
		TO-220FPAB	T_c = 150 °C T_c = 140 °C	Per diode Per device	5 10	
I_{FSM}	Surge non repetitive forward current	t_p = 10 ms sinusoidal		T_c = 25 °C	150	A
P_{ARM}(1)	Repetitive peak avalanche power		T_j = 25 °C, t_p = 1 µs		3200	W
V_{ARM}(2)	Maximum repetitive peak avalanche voltage	t_p < 1 µs, T_j < 150 °C, I_{AR} < 9.6 A			100	V
V_{ASM}(2)	Maximum single pulse peak avalanche voltage	t_p < 1 µs, T_j < 150 °C, I_{AR} < 9.6 A			100	V
T_{stg}	Storage temperature range				-65 to +175	°C
T_j	Maximum operating junction temperature(3)				175	°C

1. For temperature or pulse time duration deratings, please refer to figure 3 and 4. More details regarding the avalanche energy measurements and diode validation in the avalanche are provided in the application notes AN1768 and AN2025.
2. See *Figure 13*
3. $\frac{dPtot}{dTj} < \frac{1}{Rth(j-a)}$ condition to avoid thermal runaway for a diode on its own heatsink

Table 3. Thermal parameters

Symbol	Parameter			Value	Unit
$R_{th(j-c)}$	Junction to case	TO-220AB I^2PAK, D^2PAK	per diode	3.20	°C/W
			total	1.95	
		TO-220FPAB	per diode	6.10	
			total	4.85	
$R_{th(c)}$	Coupling	TO-220AB I^2PAK, D^2PAK		0.70	°C/W
		TO-220FPAB		3.60	

When the two diodes 1 and 2 are used simultaneously:

ΔT_j(diode 1) = P(diode 1) x $R_{th(j-c)}$(Per diode) + P(diode 2) x $R_{th(c)}$

Obsolete Product(s) - Obsolete Product(s)

Table 4. Static electrical characteristics (per diode)

Symbol	Parameter	Test conditions		Min.	Typ.	Max.	Unit
I_R(1)	Reverse leakage current	T_j = 25 °C	$V_R = V_{RRM}$	-	3.2	15	µA
		T_j = 125 °C		-	2.8	8	mA
V_F(2)	Forward voltage drop	T_j = 25 °C	I_F = 2.5 A	-	0.560	0.610	V
		T_j = 125 °C		-	0.485	0.520	
		T_j = 25 °C	I_F = 5 A	-	0.685	0.745	
		T_j = 125 °C		-	0.575	0.615	
		T_j = 25 °C	I_F = 10 A	-	0.815	0.880	
		T_j = 125 °C		-	0.660	0.730	

1. Pulse test: t_p = 5 ms, δ < 2 %
2. Pulse test: t_p = 380 µs, δ < 2 %

To evaluate the conduction losses use the following equation:
$P = 0.50 \times I_{F(AV)} + 0.023 \times I_F{}^2{}_{(RMS)}$

Figure 2. Average forward power dissipation versus average forward current (per diode)

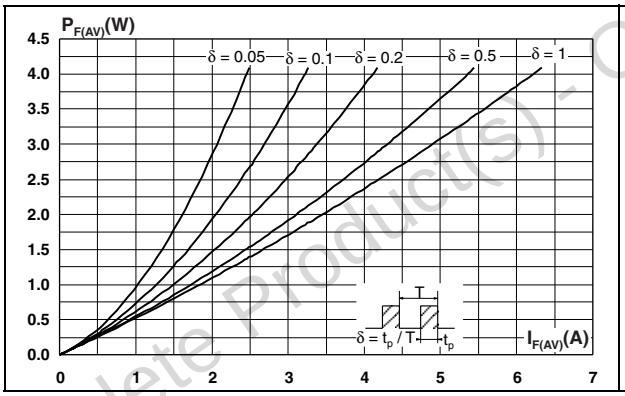

Figure 3. Average forward current versus ambient temperature (δ = 0.5, per diode)

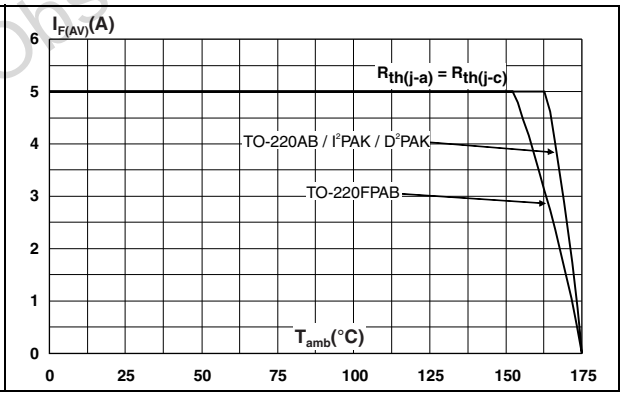

Figure 4. Normalized avalanche power derating versus pulse duration

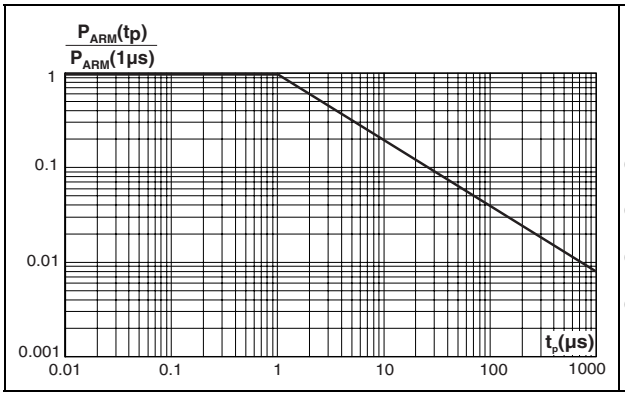

Figure 5. Normalized avalanche power derating versus junction temperature

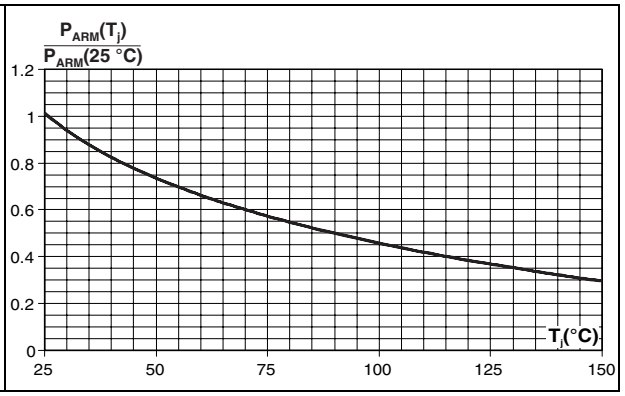

Obsolete Product(s) - Obsolete Product(s)

Figure 6. Non repetitive surge peak forward current versus overload duration (maximum values, per diode)

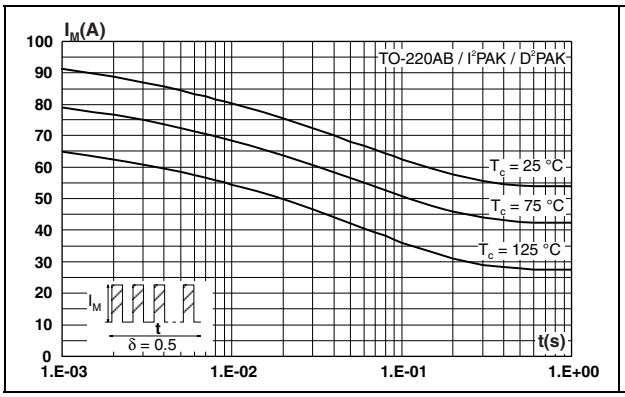

Figure 7. Non repetitive surge peak forward current versus overload duration (maximum values, per diode)

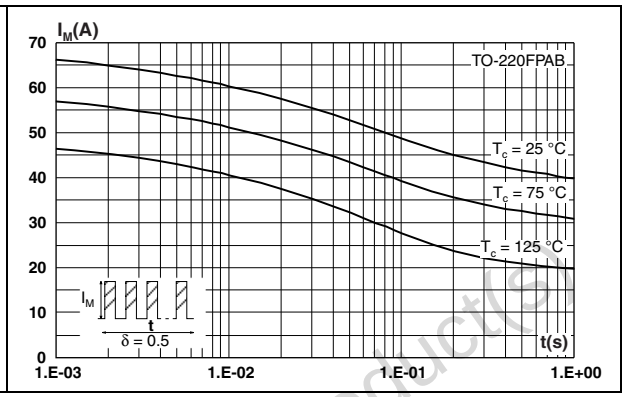

Figure 8. Relative thermal impedance junction to case versus pulse duration

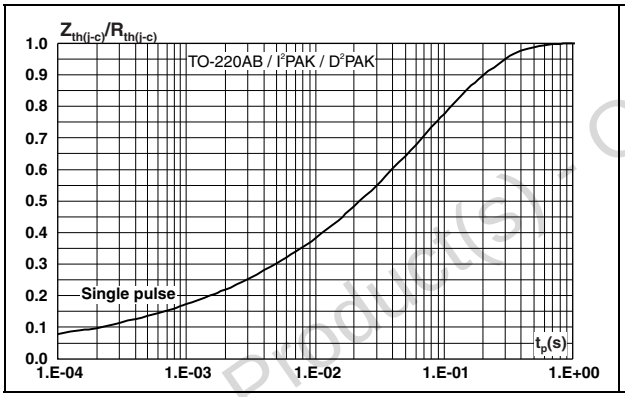

Figure 9. Relative thermal impedance junction to case versus pulse duration (TO-220FPAB)

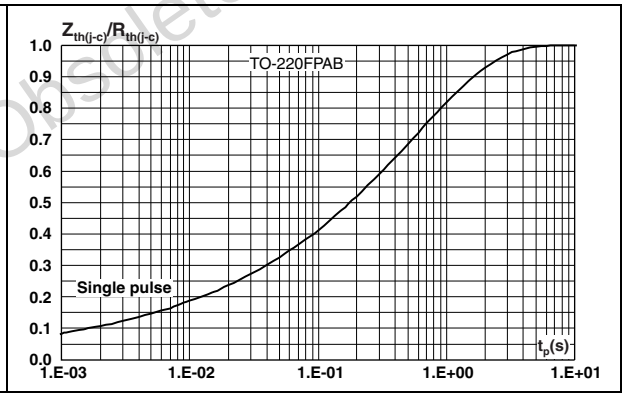

Figure 10. Reverse leakage current versus reverse voltage applied (typical values, per diode)

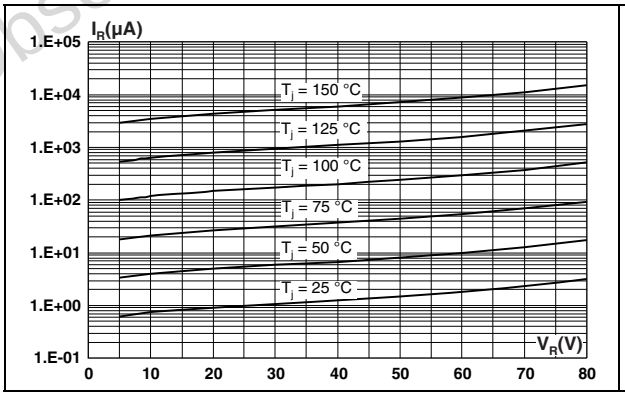

Figure 11. Junction capacitance versus reverse voltage applied (typical values, per diode)

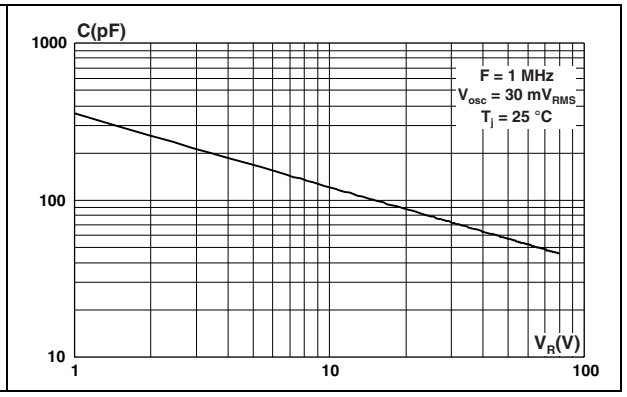

Obsolete Product(s) - Obsolete Product(s)

Figure 12. Forward voltage drop versus forward current (per diode)

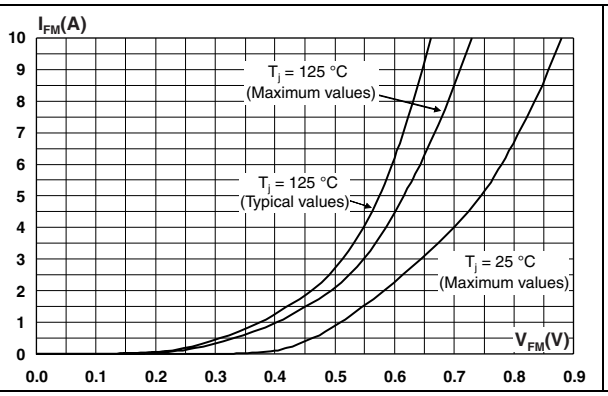

Figure 13. Reverse safe operating area (t_p < 1 µs and T_j < 150 °C)

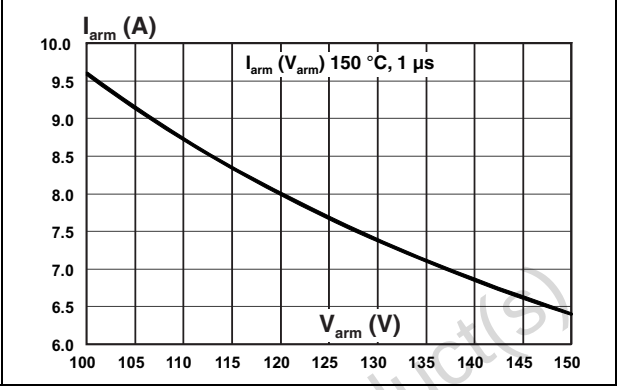

Figure 14. Thermal resistance junction to ambient versus copper surface under tab for D^2PAK

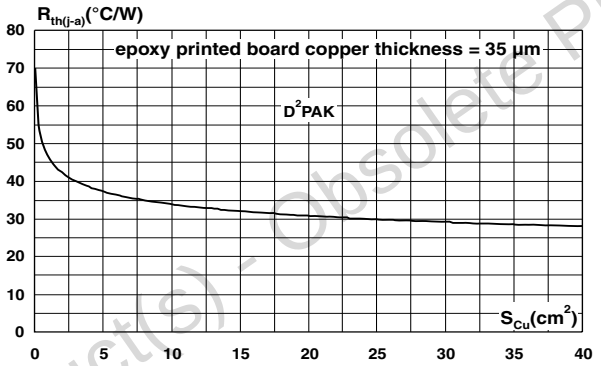

Obsolete Product(s) - Obsolete Product(s)

2 Package information

- Epoxy meets UL94, V0
- Cooling method: by conduction (C)
- Recommended torque value: 0.4 to 0.6 N·m

In order to meet environmental requirements, ST offers these devices in different grades of ECOPACK® packages, depending on their level of environmental compliance. ECOPACK® specifications, grade definitions and product status are available at: www.st.com. ECOPACK® is an ST trademark.

Table 5. TO-220AB dimensions

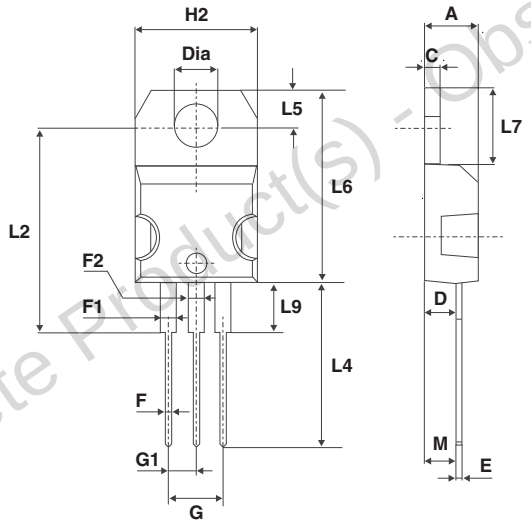

Ref.	Dimensions			
	Millimeters		Inches	
	Min.	Max.	Min.	Max.
A	4.40	4.60	0.173	0.181
C	1.23	1.32	0.048	0.051
D	2.40	2.72	0.094	0.107
E	0.49	0.70	0.019	0.027
F	0.61	0.88	0.024	0.034
F1	1.14	1.70	0.044	0.066
F2	1.14	1.70	0.044	0.066
G	4.95	5.15	0.194	0.202
G1	2.40	2.70	0.094	0.106
H2	10	10.40	0.393	0.409
L2	16.4 Typ.		0.645 Typ.	
L4	13	14	0.511	0.551
L5	2.65	2.95	0.104	0.116
L6	15.25	15.75	0.600	0.620
L7	6.20	6.60	0.244	0.259
L9	3.50	3.93	0.137	0.154
M	2.6 Typ.		0.102 Typ.	
Dia.	3.75	3.85	0.147	0.151

Obsolete Product(s) - Obsolete Product(s)

Table 6. TO-220FPAB dimensions

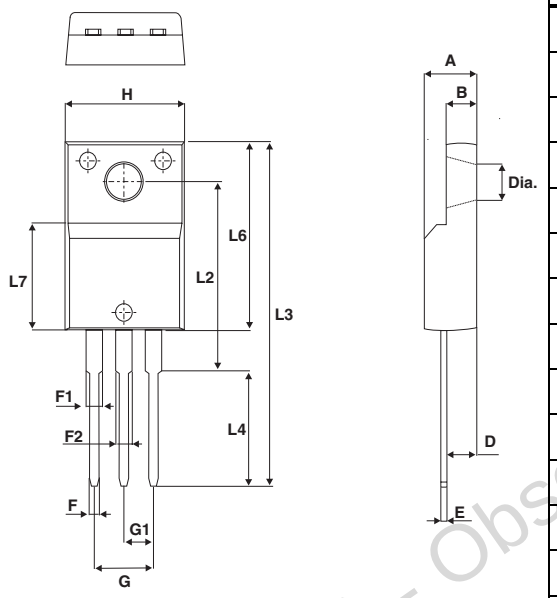

Ref.	Dimensions			
	Millimeters		Inches	
	Min.	Max.	Min.	Max.
A	4.4	4.9	0.173	0.192
B	2.5	2.9	0.098	0.114
D	2.45	2.75	0.096	0.108
E	0.4	0.7	0.016	0.028
F	0.6	1	0.024	0.039
F1	1.15	1.7	0.045	0.067
F2	1.15	1.7	0.045	0.067
G	4.95	5.2	0.195	0.205
G1	2.4	2.7	0.094	0.106
H	10	10.7	0.394	0.421
L2	16 Typ.		0.630 Typ.	
L3	28.6	30.6	1.126	1.205
L4	9.8	10.7	0.386	0.421
L6	15.8	16.4	0.622	0.646
L7	9	9.9	0.354	0.390
Dia.	2.9	3.5	0.114	0.138

Obsolete Product(s) - Obsolete Product(s)

Table 7. D²PAK dimensions

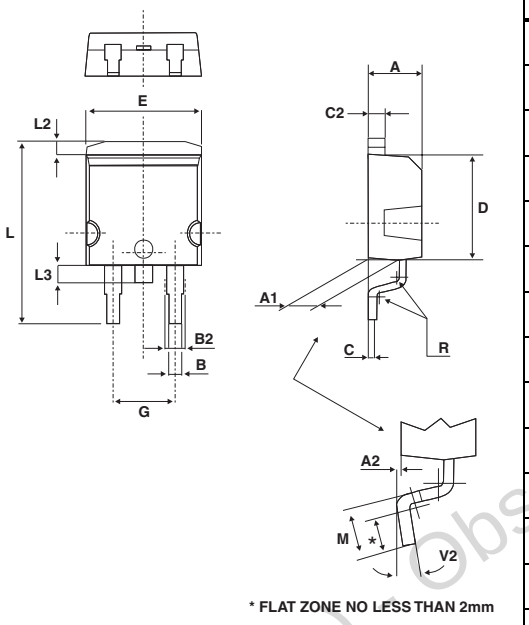

Ref.	Dimensions			
	Millimeters		Inches	
	Min.	Max.	Min.	Max.
A	4.40	4.60	0.173	0.181
A1	2.49	2.69	0.098	0.106
A2	0.03	0.23	0.001	0.009
B	0.70	0.93	0.027	0.037
B2	1.14	1.70	0.045	0.067
C	0.45	0.60	0.017	0.024
C2	1.23	1.36	0.048	0.054
D	8.95	9.35	0.352	0.368
E	10.00	10.40	0.393	0.409
G	4.88	5.28	0.192	0.208
L	15.00	15.85	0.590	0.624
L2	1.27	1.40	0.050	0.055
L3	1.40	1.75	0.055	0.069
M	2.40	3.20	0.094	0.126
R	0.40 typ.		0.016 typ.	
V2	0°	8°	0°	8°

Figure 15. D²PAK footprint (dimensions in mm)

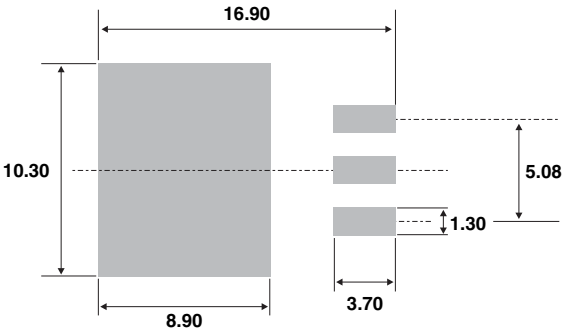

Obsolete Product(s) - Obsolete Product(s)

Table 8. I^2PAK dimensions

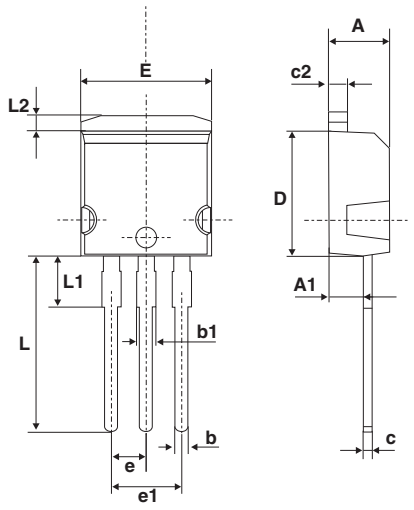

Ref.	Dimensions			
	Millimeters		Inches	
	Min.	Max.	Min.	Max.
A	4.40	4.60	0.173	0.181
A1	2.40	2.72	0.094	0.107
b	0.61	0.88	0.024	0.035
b1	1.14	1.70	0.044	0.067
c	0.49	0.70	0.019	0.028
c2	1.23	1.32	0.048	0.052
D	8.95	9.35	0.352	0.368
e	2.40	2.70	0.094	0.106
e1	4.95	5.15	0.195	0.203
E	10	10.40	0.394	0.409
L	13	14	0.512	0.551
L1	3.50	3.93	0.138	0.155
L2	1.27	1.40	0.050	0.055

Obsolete Product(s) - Obsolete Product(s)

3 Ordering information

Table 9. Ordering information

Order code	Marking	Package	Weight	Base qty	Delivery mode
STPS10SM80CT	PS10SM80CT	TO-220AB	1.9 g	50	Tube
STPS10SM80CFP	PS10SM80CFP	TO-220FPAB	2.0 g	50	Tube
STPS10SM80CR	PS10SM80CR	I^2PAK	1.49 g	50	Tube
STPS10SM80CG-TR	PS10SM80CG	D^2PAK	1.48 g	1000	Tape and reel

4 Revision history

Table 10. Revision history

Date	Revision	Changes
11-Apr-2011	1	First issue.

Obsolete Product(s) - Obsolete Product(s)

Obsolete Product(s) - Obsolete Product(s)

Please Read Carefully:

Information in this document is provided solely in connection with ST products. STMicroelectronics NV and its subsidiaries (“ST”) reserve the right to make changes, corrections, modifications or improvements, to this document, and the products and services described herein at any time, without notice.

All ST products are sold pursuant to ST’s terms and conditions of sale.

Purchasers are solely responsible for the choice, selection and use of the ST products and services described herein, and ST assumes no liability whatsoever relating to the choice, selection or use of the ST products and services described herein.

No license, express or implied, by estoppel or otherwise, to any intellectual property rights is granted under this document. If any part of this document refers to any third party products or services it shall not be deemed a license grant by ST for the use of such third party products or services, or any intellectual property contained therein or considered as a warranty covering the use in any manner whatsoever of such third party products or services or any intellectual property contained therein.

UNLESS OTHERWISE SET FORTH IN ST’S TERMS AND CONDITIONS OF SALE ST DISCLAIMS ANY EXPRESS OR IMPLIED WARRANTY WITH RESPECT TO THE USE AND/OR SALE OF ST PRODUCTS INCLUDING WITHOUT LIMITATION IMPLIED WARRANTIES OF MERCHANTABILITY, FITNESS FOR A PARTICULAR PURPOSE (AND THEIR EQUIVALENTS UNDER THE LAWS OF ANY JURISDICTION), OR INFRINGEMENT OF ANY PATENT, COPYRIGHT OR OTHER INTELLECTUAL PROPERTY RIGHT.

UNLESS EXPRESSLY APPROVED IN WRITING BY AN AUTHORIZED ST REPRESENTATIVE, ST PRODUCTS ARE NOT RECOMMENDED, AUTHORIZED OR WARRANTED FOR USE IN MILITARY, AIR CRAFT, SPACE, LIFE SAVING, OR LIFE SUSTAINING APPLICATIONS, NOR IN PRODUCTS OR SYSTEMS WHERE FAILURE OR MALFUNCTION MAY RESULT IN PERSONAL INJURY, DEATH, OR SEVERE PROPERTY OR ENVIRONMENTAL DAMAGE. ST PRODUCTS WHICH ARE NOT SPECIFIED AS "AUTOMOTIVE GRADE" MAY ONLY BE USED IN AUTOMOTIVE APPLICATIONS AT USER’S OWN RISK.

Resale of ST products with provisions different from the statements and/or technical features set forth in this document shall immediately void any warranty granted by ST for the ST product or service described herein and shall not create or extend in any manner whatsoever, any liability of ST.

ST and the ST logo are trademarks or registered trademarks of ST in various countries.

Information in this document supersedes and replaces all information previously supplied.

The ST logo is a registered trademark of STMicroelectronics. All other names are the property of their respective owners.

© 2011 STMicroelectronics - All rights reserved

STMicroelectronics group of companies

Australia - Belgium - Brazil - Canada - China - Czech Republic - Finland - France - Germany - Hong Kong - India - Israel - Italy - Japan - Malaysia - Malta - Morocco - Philippines - Singapore - Spain - Sweden - Switzerland - United Kingdom - United States of America

www.st.com