VND5025BK-E

Double channel high-side driver with analog current sense for automotive applications

Features

Max transient supply voltage	V_{CC}	41 V
Operating voltage range	V_{CC}	4.5 to 36 V
Max on-state resistance (per ch.)	R_{ON}	25 mΩ
Current limitation (typ)	I_{LIMH}	60 A
Off-state supply current	I_S	2 µA(1)

1. Typical value with all loads connected.

- Features
  - In-rush current active management by power limitation
  - Very low standby current
  - 3.0 V CMOS compatible input
  - Optimized electromagnetic emission
  - Very low electromagnetic susceptibility
  - In compliance with the 2002/95/EC European directive
  - Two classes with different 'K@3A' ranges
  - Package: ECOPACK®
- Diagnostic functions
  - 3 A current sense precision of +/-8%
  - Proportional load current sense
  - High current sense precision for wide range currents
  - Current sense disable
  - Thermal shutdown indication
  - Very low current sense leakage
- Protection
  - Undervoltage shutdown
  - Overvoltage clamp
  - Load current limitation
  - Self-limiting of fast thermal transients
  - Protection against loss of ground and loss of V_{CC}
  - Thermal shutdown
  - Reverse battery protection

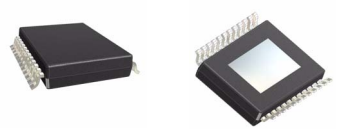

PowerSSO-24™

  - Electrostatic discharge protection

Description

The VND5025BK-E is a monolithic device made using STMicroelectronics™ VIPower™ M0-5 technology, intended for driving resistive or inductive loads with one side connected to ground, and suitable for driving LEDs.

Active V_{CC} pin voltage clamp protects the device against low energy spikes (see ISO7637 transient compatibility table). This device integrates an analog current sense which delivers a current proportional to the load current (according to a known ratio) when CS_DIS is driven low or left open. When CS_DIS is driven high, the CURRENT SENSE pin is in a high impedance condition.

Output current limitation protects the device in overload condition. In case of long overload duration, the device limits the dissipated power to safe level up to thermal shutdown intervention. Thermal shutdown with automatic restart allows the device to recover normal operation as soon as fault condition disappears.

Table 1. Device summary

Package	Order codes	
	Tube	Tape and reel
PowerSSO-24™	VND5025BK-E VND5025B1K-E VND5025B2K-E	VND5025BKTR-E VND5025B1KTR-E VND5025B2KTR-E

Obsolete Product(s) - Obsolete Product(s)

Contents

1 Block diagram and pin description 5

2 Electrical specification 7

2.1 Absolute maximum ratings 7

2.2 Thermal data 8

2.3 Electrical characteristics 9

2.4 Electrical characteristics curves 19

3 Application information 22

3.1 GND protection network against reverse battery 22

3.1.1 Solution 1: resistor in the ground line (RGND only) 22

3.1.2 Solution 2: diode (DGND) in the ground line 23

3.2 Load dump protection 23

3.3 MCU I/Os protection 23

3.4 Maximum demagnetization energy (VCC = 13.5 V) 24

4 Package and thermal data 25

4.1 PowerSSO-24™ thermal data 25

5 Package and packing information 28

5.1 ECOPACK® packages 28

5.2 Package mechanical data 28

5.3 Packing information 30

6 Revision history 31

Obsolete Product(s) - Obsolete Product(s)

List of tables

Table 1. Device summary . . . 1
Table 2. Pin functions . . . 5
Table 3. Suggested connections for unused and not connected pins . . . 6
Table 4. Absolute maximum ratings . . . 7
Table 5. Thermal data . . . 8
Table 6. Power section . . . 9
Table 7. Switching (V_{CC} = 13V; T_j = 25 °C) . . . 9
Table 8. Logic input . . . 10
Table 9. Protection and diagnostics . . . 10
Table 10. Current sense (8 V < V_{CC} < 16 V) . . . 11
Table 11. Truth table . . . 15
Table 12. Electrical transient requirements (part 1/3) . . . 17
Table 13. Electrical transient requirements (part 2/3) . . . 17
Table 14. Electrical transient requirements (part 3/3) . . . 17
Table 15. Thermal parameters . . . 27
Table 16. PowerSSO-24™ mechanical data . . . 29
Table 17. Document revision history . . . 31

Obsolete Product(s) - Obsolete Product(s)

List of figures

Figure 1. Block diagram . . . 5
Figure 2. Configuration diagram (top view) . . . 6
Figure 3. Current and voltage conventions . . . 7
Figure 4. Current sense delay characteristics . . . 12
Figure 5. Delay response time between rising edge of output current and rising edge of current sense (CS enabled) . . . 13
Figure 6. I_{OUT}/I_{SENSE} vs I_{OUT} . . . 14
Figure 7. Maximum current sense ratio drift vs load current . . . 15
Figure 8. Switching characteristics . . . 16
Figure 9. Output voltage drop limitation . . . 16
Figure 10. Waveforms . . . 18
Figure 11. Off-state output current . . . 19
Figure 12. High level input current . . . 19
Figure 13. Input clamp voltage . . . 19
Figure 14. Input high level . . . 19
Figure 15. Input low level . . . 19
Figure 16. Input hysteresis voltage . . . 19
Figure 17. On-state resistance vs T_{case} . . . 20
Figure 18. On-state resistance vs V_{CC} . . . 20
Figure 19. Undervoltage shutdown . . . 20
Figure 20. I_{LIMH} vs T_{case} . . . 20
Figure 21. Turn-on voltage slope . . . 20
Figure 22. Turn-off voltage slope . . . 20
Figure 23. CS_DIS high level voltage . . . 21
Figure 24. CS_DIS low level voltage . . . 21
Figure 25. CS_DIS clamp voltage . . . 21
Figure 26. Application schematic . . . 22
Figure 27. Maximum turn-off current versus inductance (for each channel) . . . 24
Figure 28. PowerSSO-24™ PC board . . . 25
Figure 29. Rthj-amb vs PCB copper area in open box free air condition (one channel ON) . . . 25
Figure 30. PowerSSO-24™ thermal impedance junction to ambient single pulse (one channel ON) . 26
Figure 31. Thermal fitting model of a double channel HSD in PowerSSO-24™ . . . 26
Figure 32. PowerSSO-24™ package dimensions . . . 28
Figure 33. PowerSSO-24™ tube shipment (no suffix) . . . 30
Figure 34. PowerSSO-24™ tape and reel shipment (suffix “TR”) . . . 30

Obsolete Product(s) - Obsolete Product(s)

1 Block diagram and pin description

Figure 1. Block diagram

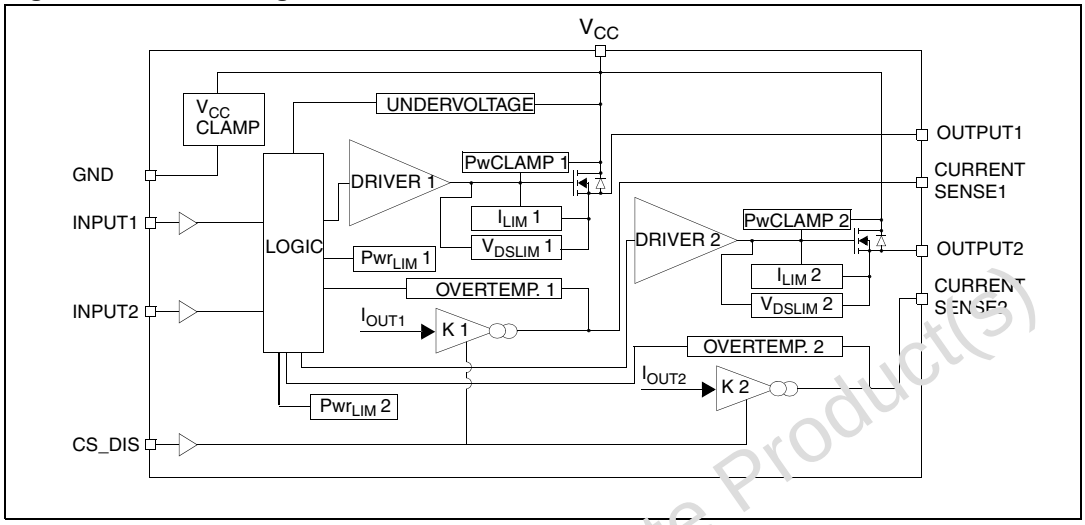

Table 2. Pin functions

Name	Function
V_{CC}	Battery connection.
$OUTPUT_{1,2}$	Power output.
GND	Ground connection; must be reverse battery protected by an external diode/resistor network.
$INPUT_{1,2}$	Voltage controlled input pin with hysteresis, CMOS compatible; controls output switch state.
$CURRENT\ SENSE_{1,2}$	Analog current sense pin; delivers a current proportional to the load current.
CS_DIS	Active high CMOS compatible pin to disable the current sense pin.

Obsolete Product(s) - Obsolete Product(s)

Figure 2. Configuration diagram (top view)

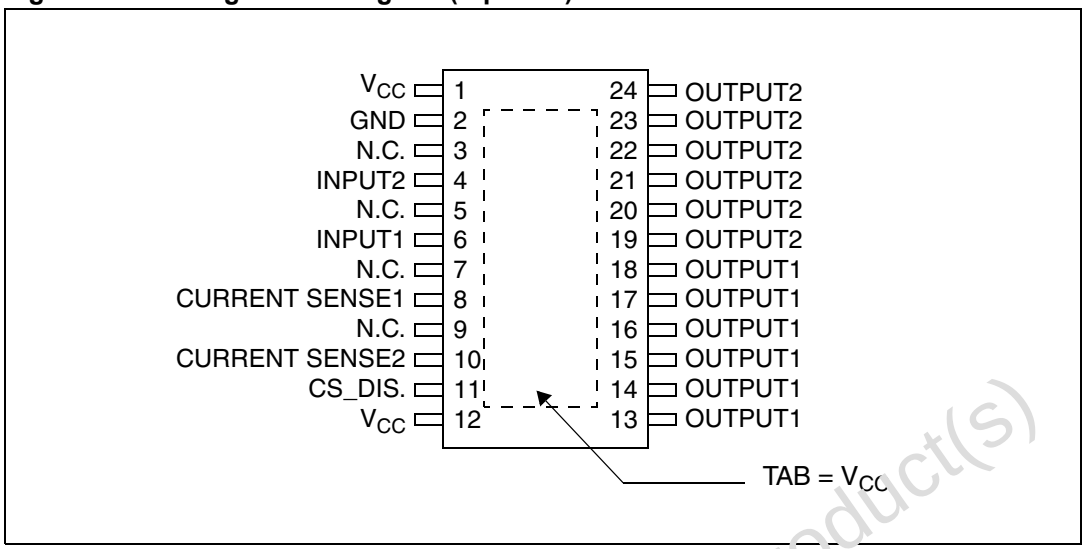

Table 3. Suggested connections for unused and not connected pins

Connection / pin	Current sense	N.C.	Output	Input	CS_DIS
Floating	N.R.(1)	X	X	X	X
To Ground	Through 1kΩ resistor	X	N.R.	Through 10kΩ resistor	Through 10kΩ resistor

1. Not recommended.

Obsolete Product(s) - Obsolete Product(s)

2 Electrical specification

Figure 3. Current and voltage conventions

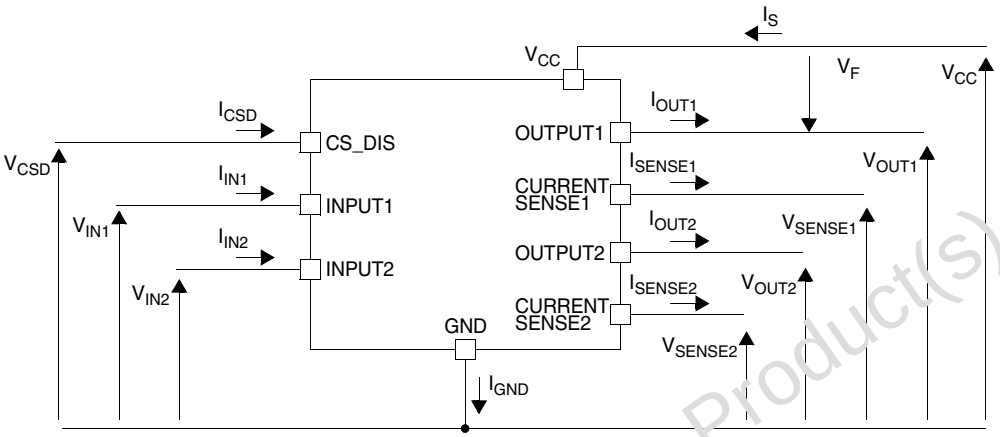

Note: $V_{Fn} = V_{OUTn} - V_{CC}$ during reverse battery condition.

2.1 Absolute maximum ratings

Stressing the device above the rating listed in the “Absolute maximum ratings” table may cause permanent damage to the device. These are stress ratings only and operation of the device at these or any other conditions above those indicated in the Operating sections of this specification is not implied. Exposure to the conditions in table below for extended periods may affect device reliability. Refer also to the STMicroelectronics SURE Program and other relevant quality document.

Table 4. Absolute maximum ratings

Symbol	Parameter	Value	Unit
V_{CC}	DC supply voltage	41	V
$-V_{CC}$	Reverse DC supply voltage	0.3	
$-I_{GND}$	DC reverse ground pin current	200	mA
I_{OUT}	DC output current	Internally limited	A
$-I_{OUT}$	Reverse DC output current	24	
I_{IN}	DC input current	-1 to 10	mA
I_{CSD}	DC current sense disable input current		
$-I_{CSENSE}$	DC reverse CS pin current	200	
V_{CSENSE}	Current sense maximum voltage	V_{CC} - 41 to $+V_{CC}$	V

Obsolete Product(s) - Obsolete Product(s)

Table 4. Absolute maximum ratings (continued)

Symbol	Parameter	Value	Unit
E_{MAX}(1)	Maximum switching energy (single pulse) (L = 0.3 mH; R_L = 0 Ω; V_{bat} = 13.5 V; T_{jstart} = 150 °C; I_{OUT} = I_{limL}(Typ.))	109	mJ
V_{ESD}	Electrostatic discharge (Human Body Model: R = 1.5 kΩ; C = 100 pF) - Input - Current sense - CS_DIS - Output - V_{CC}	 4000 2000 4000 5000 5000	 V V V V V
V_{ESD}	Charge device model (CDM-AEC-Q100-011)	750	V
T_j	Junction operating temperature	-40 to 150	°C
T_{stg}	Storage temperature	-55 to 150	

1. See *Section 3.4* for details.

2.2 Thermal data

Table 5. Thermal data

Symbol	Parameter	Maximum value	Unit
$R_{thj\text{-}case}$	Thermal resistance junction-case (with one channel ON)	1.35	°C/W
$R_{thj\text{-}amb}$	Thermal resistance junction-ambient	See *Figure 29*	

Obsolete Product(s) - Obsolete Product(s)

2.3 Electrical characteristics

8 V < V_{CC} < 36 V; -40 °C < T_j < 150 °C, unless otherwise specified.

Table 6. Power section

Symbol	Parameter	Test conditions	Min.	Typ.	Max.	Unit
V_{CC}	Operating supply voltage		4.5	13	36	V
V_{USD}	Undervoltage shutdown			3.5	4.5	
$V_{USDhyst}$	Undervoltage shut-down hysteresis			0.5		
R_{ON}	On-state resistance(1)	I_{OUT} = 3 A; T_j = 25 °C			25	mΩ
		I_{OUT} = 3 A; T_j = 150 °C			50	
		I_{OUT} = 3 A; V_{CC} = 5 V; T_j = 25 °C			35	
V_{clamp}	Clamp voltage	I_S = 20 mA	41	46	52	V
I_S	Supply current	Off-state; V_{CC} = 13 V; T_j = 25 °C; V_{IN} = V_{OUT} = V_{SENSE} = V_{CSD} = 0 V		2(2)	5(2)	µA
		On-state; V_{CC} = 13 V; V_{IN} = 5 V; I_{OUT} = 0 A		3	6	mA
$I_{L(off)}$	Off-state output current(1)	V_{IN} = V_{OUT} = 0 V; V_{CC} = 13V; T_j = 25 °C	0	0.01	3	µA
		V_{IN} = V_{OUT} = 0 V; V_{CC} = 13 V; T_j = 125 °C	0		5	
V_F	Output - V_{CC} diode voltage(1)	-I_{OUT} = 4 A; T_j = 150 °C			0.7	V

1. For each channel.
2. PowerMOS leakage included.

Table 7. Switching (V_{CC} = 13V; T_j = 25 °C)

Symbol	Parameter	Test conditions	Min.	Typ.	Max.	Unit
$t_{d(on)}$	Turn-on delay time	R_L = 4.3 Ω (see *Figure 8*)	—	35	—	µs
$t_{d(off)}$	Turn-off delay time		—	50	—	
$(dV_{OUT}/dt)_{on}$	Turn-on voltage slope	R_L = 4.3 Ω	—	See *Figure 21*	—	V/µs
$(dV_{OUT}/dt)_{off}$	Turn-off voltage slope		—	See *Figure 22*	—	
W_{ON}	Switching energy losses during t_{WON}	R_L = 4.3 Ω (see *Figure 8*)	—	0.45	—	mJ
W_{OFF}	Switching energy losses during t_{WOFF}		—	0.35	—	

Obsolete Product(s) - Obsolete Product(s)

Table 8. Logic input

Symbol	Parameter	Test conditions	Min.	Typ.	Max.	Unit
V_{IL}	Input low level voltage				0.9	V
I_{IL}	Low level input current	V_{IN} = 0.9 V	1			µA
V_{IH}	Input high level voltage		2.1			V
I_{IH}	High level input current	V_{IN} = 2.1 V			10	µA
$V_{I(hyst)}$	Input hysteresis voltage		0.25			V
V_{ICL}	Input clamp voltage	I_{IN} = 1 mA	5.5		7	V
		I_{IN} = -1 mA		-0.7		
V_{CSDL}	CS_DIS low level voltage				0.9	
I_{CSDL}	Low level CS_DIS current	V_{CSD} = 0.9 V	1			µA
V_{CSDH}	CS_DIS high level voltage		2.1			V
I_{CSDH}	High level CS_DIS current	V_{CSD} = 2.1 V			10	µA
$V_{CSD(hyst)}$	CS_DIS hysteresis voltage		0.25			V
V_{CSCL}	CS_DIS clamp voltage	I_{CSD} = 1 mA	5.5		7	
		I_{CSD} = -1 mA		-0.7		

Table 9. Protection and diagnostics[1)]

Symbol	Parameter	Test conditions	Min.	Typ.	Max.	Unit
I_{LIMH}	DC short circuit current	V_{CC} = 13 V	43	60	85	A
		5 V < V_{CC} < 36 V				
I_{LIML}	Short circuit current during thermal cycling	V_{CC} = 13 V; $T_R < T_j < T_{TSD}$		24		
T_{TSD}	Shutdown temperature		150	175	200	°C
T_R	Reset temperature		T_{RS} + 1	T_{RS} + 5		
T_{RS}	Thermal reset of STATUS		135			
T_{HYST}	Thermal hysteresis (T_{TSD}-T_R)			7		
V_{DEMAG}	Turn-off output voltage clamp	I_{OUT} = 2 A; V_{IN} = 0; L = 6 mH	V_{CC} - 41	V_{CC} - 46	V_{CC} - 52	V
V_{ON}	Output voltage drop limitation	I_{OUT} = 0.2 A T_j = -40 °C to 150 °C (see *Figure 9*)		40		mV

1. To ensure long term reliability under heavy overload or short circuit conditions, protection and related diagnostic signals must be used together with a proper software strategy. If the device is subjected to abnormal conditions, this software must limit the duration and number of activation cycles.

Obsolete Product(s) - Obsolete Product(s)

Table 10. Current sense (8 V < V_{CC} < 16 V)

Symbol	Parameter	Test conditions	Min.	Typ.	Max.	Unit
K_{LED}	I_{OUT}/I_{SENSE}	I_{OUT} = 0.05 A; V_{SENSE} = 0.5 V; V_{CSD} = 0 V; T_j = -40 °C to 150 °C	1740	3300	4570	
K_0	I_{OUT}/I_{SENSE}	I_{OUT} = 0.5 A; V_{SENSE} = 0.5 V; V_{CSD} = 0 V; T_j = -40 °C to 150 °C	1920	3020	3930	
K_1	I_{OUT}/I_{SENSE}	I_{OUT} = 2 A; V_{SENSE} = 4 V; V_{CSD} = 0 V; T_j = -40 °C T_j = 25 °C to 150 °C	 2090 2320	 2810 2810	 3440 3200	
dK_1/K_1 (1)(2)	Current sense ratio drift	I_{OUT} = 2 A; V_{SENSE} = 4 V; V_{CSD} = 0 V; T_j = -40 °C to 150 °C	-8		+8	%
K_2	I_{OUT}/I_{SENSE}	I_{OUT} = 3 A; V_{SENSE} = 4 V; V_{CSD} = 0 V; T_j = -40 °C to 150 °C ClassB ClassB1 ClassB2	 2510 2510 2690		 3160 2960 3160	
dK_2/K_2 (1)(2)	Current sense ratio drift	I_{OUT} = 3 A; V_{SENSE} = 4 V; V_{CSD} = 0 V; T_j = -40 °C to 150 °C	-6		+6	%
K_3	I_{OUT}/I_{SENSE}	I_{OUT} = 10 A; V_{SENSE} = 4 V; V_{CSD} = 0 V; T_j = -40 °C T_j = 25 °C to 150 °C	 2610 2650	 2760 2760	 2970 2870	
dK_3/K_3 (1)(2)	Current sense ratio drift	I_{OUT} = 10 A; V_{SENSE} = 4 V; V_{CSD} = 0 V; T_j = -40 °C to 150 °C	-3		+3	%
I_{SENSE0}	Analog sense leakage current	I_{OUT} = 0 A; V_{SENSE} = 0 V; V_{CSD} = 5 V; V_{IN} = 0 V; T_j = -40 °C to 150 °C	0		1	µA
		V_{CSD} = 0 V; V_{IN} = 5 V; T_j = -40 °C to 150 °C	0		2	µA
		I_{OUT} = 2 A; V_{SENSE} = 0 V; V_{CSD} = 5 V; V_{IN} = 5 V; T_j = -40 °C to 150 °C	0		1	µA
V_{SENSE}	Max analog Sense output voltage	I_{OUT} = 3 A; V_{CSD} = 0 V	5			V
V_{SENSEH}	Analog sense output voltage in overtemperature condition	V_{CC} = 13 V; R_{SENSE} = 3.9 kΩ		9		
I_{SENSEH}	Analog sense output current in overtemperature condition	V_{CC} = 13 V; V_{SENSE} = 5 V		8		mA

Obsolete Product(s) - Obsolete Product(s)

Table 10. Current sense (8 V < V_{CC} < 16 V) (continued)

Symbol	Parameter	Test conditions	Min.	Typ.	Max.	Unit
$t_{DSENSE1H}$	Delay response time from falling edge of CS_DIS pin	V_{SENSE} < 4 V, 0.5 < I_{OUT} < 10 A I_{SENSE} = 90 % of $I_{SENSEMAX}$ (see *Figure 4*)		50	100	µs
$t_{DSENSE1L}$	Delay response time from rising edge of CS_DIS pin	V_{SENSE} < 4 V, 0.5 < I_{OUT} < 10 A I_{SENSE} = 10 % of $I_{SENSEMAX}$ (see *Figure 4*)		5	20	
$t_{DSENSE2H}$	Delay response time from rising edge of INPUT pin	V_{SENSE} < 4 V, 0.5 < I_{OUT} < 10 A I_{SENSE} = 90 % of $I_{SENSEMAX}$ (see *Figure 4*)		70	300	
$\Delta t_{DSENSE2H}$	Delay response time between rising edge of output current and rising edge of current sense	V_{SENSE} < 4 V, I_{SENSE} = 90 % of $I_{SENSEMAX}$, I_{OUT} = 90 % of I_{OUTMAX}, I_{OUTMAX} = 3 A (see *Figure 5*)			110	
$t_{DSENSE2L}$	Delay response time from falling edge of INPUT pin	V_{SENSE} < 4 V, 0.5 < I_{OUT} < 10 A I_{SENSE} = 10 % of $I_{SENSEMAX}$ (see *Figure 4*)		100	250	

1. Parameter guaranteed by design; it is not tested.
2. Current sense ratio drift is the deviation of factor K for a given device (measured over the range -40 °C to 150 °C and 8 V < V_{CC} < 16 V) from its value measured at T_j = 25 °C, V_{CC} = 13 V.

Figure 4. Current sense delay characteristics

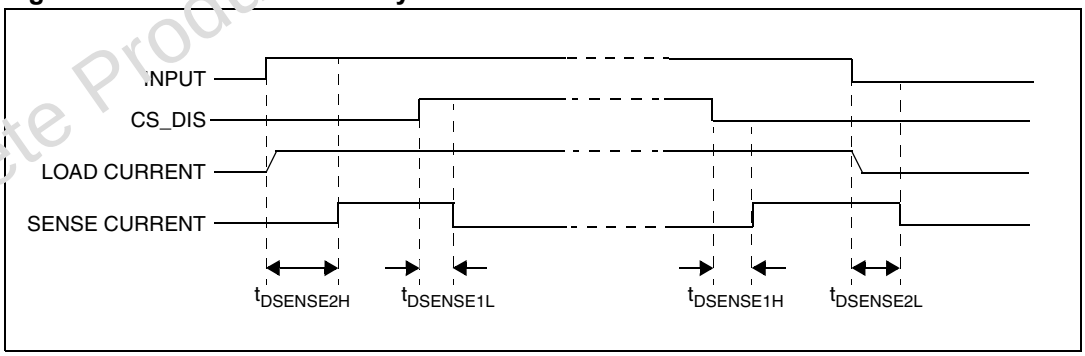

Obsolete Product(s) - Obsolete Product(s)

Figure 5. Delay response time between rising edge of output current and rising edge of current sense (CS enabled)

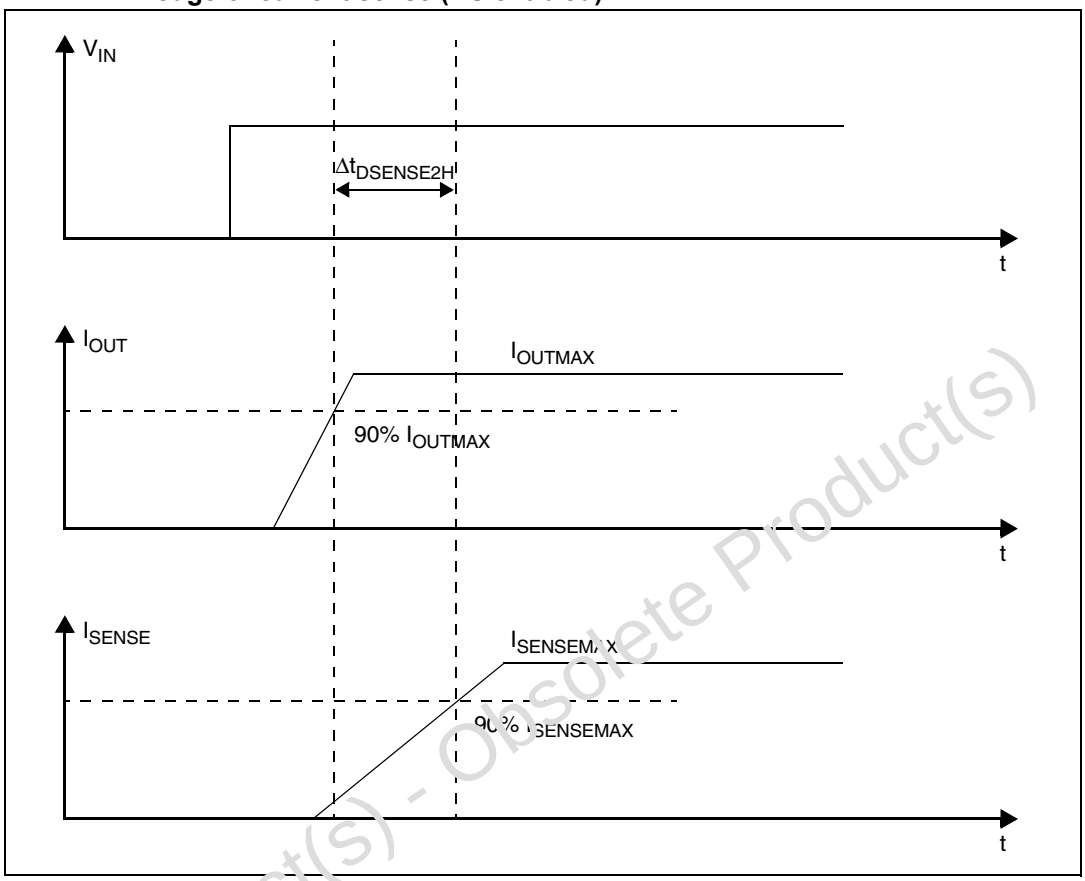

Obsolete Product(s) - Obsolete Product(s)

Figure 6. I_{OUT}/I_{SENSE} vs I_{OUT}

Class B

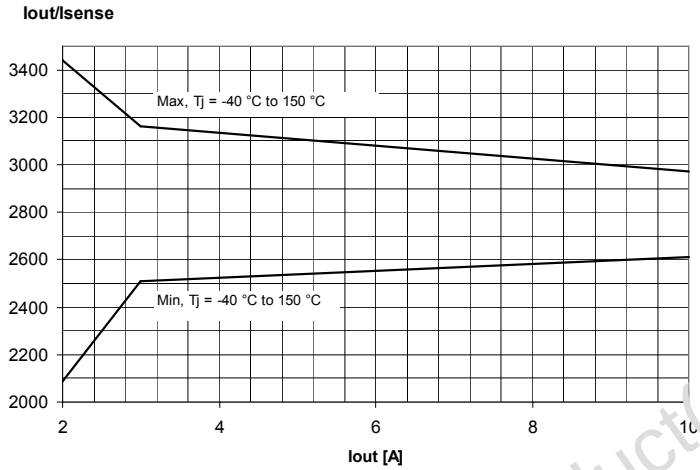

Class B1

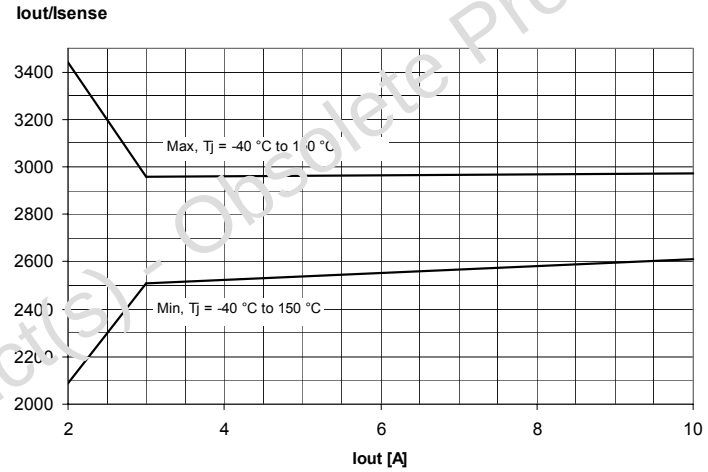

Class B2

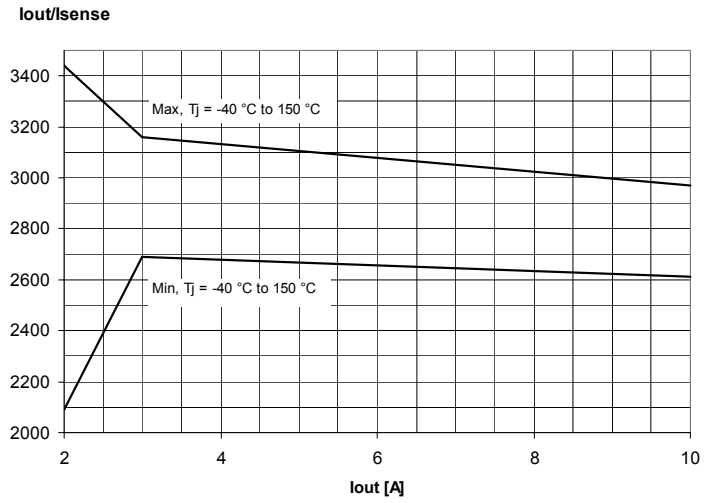

Note: See *Table 10* for details.

Obsolete Product(s) - Obsolete Product(s)

Figure 7. Maximum current sense ratio drift vs load current

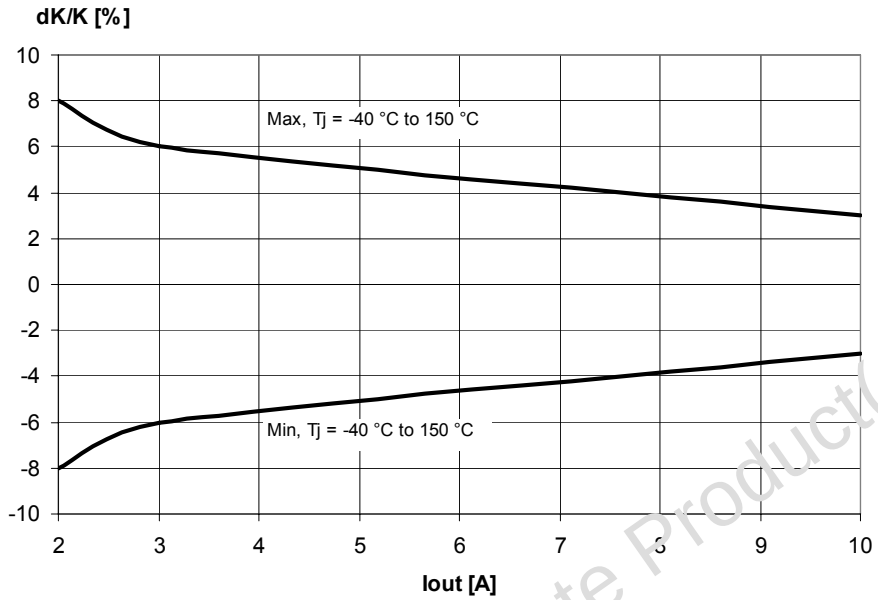

Note: Parameter guaranteed by design; it is not tested.

Table 11. Truth table

Conditions	Input	Output	Sense (V_{CSD} = 0 V)(1)
Normal operation	L	L	0
	H	H	Nominal
Overtemperature	L	L	0
	H		V_{SENSEH}
Undervoltage	L	L	0
	H		
Short circuit to GND ($R_{SC} \leq 10m\Omega$)	L	L	0
	H		0 if $T_j < T_{TSD}$
			V_{SENSEH} if $T_j > T_{TSD}$
Short circuit to V_{CC}	L	H	0
	H		< Nominal
Negative output voltage clamp	L	L	0

1. If the V_{CSD} is high, the SENSE output is at a high impedance; its potential depends on leakage currents and external circuit.

Obsolete Product(s) - Obsolete Product(s)

Figure 8. Switching characteristics

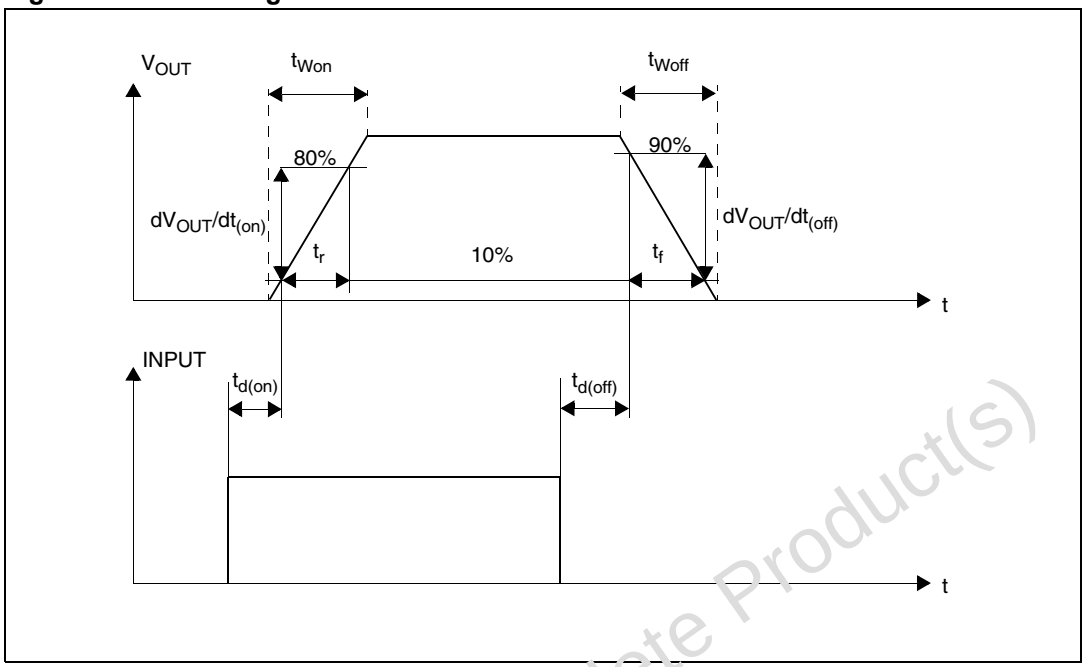

Figure 9. Output voltage drop limitation

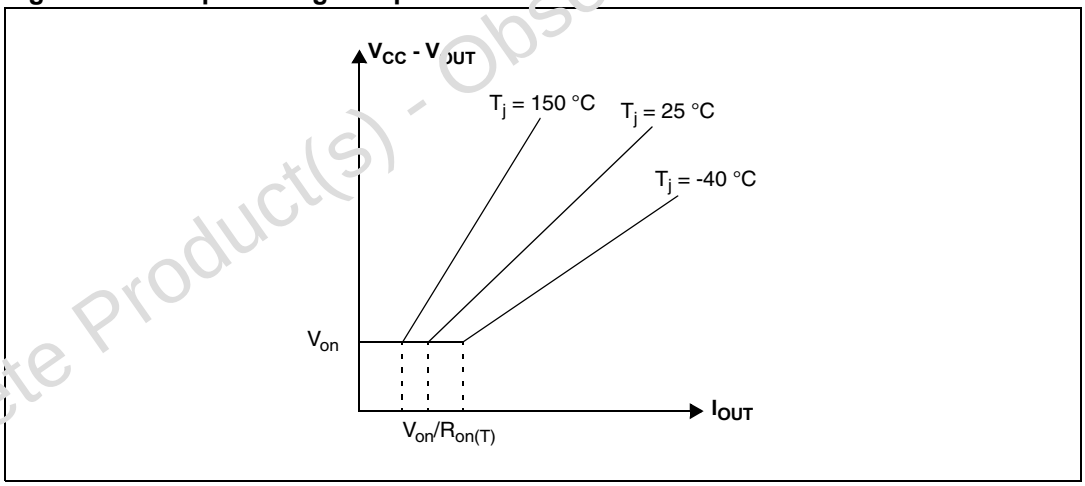

Obsolete Product(s) - Obsolete Product(s)

Table 12. Electrical transient requirements (part 1/3)

ISO 7637-2: 2004(E) Test pulse	Test levels(1)		Number of pulses or test times	Burst cycle/pulse repetition time		Delays and Impedance
	III	IV		Min.	Max.	
1	-75V	-100V	5000 pulses	0.5s	5s	2 ms, 10Ω
2a	+37V	+50V	5000 pulses	0.2s	5s	50µs, 2Ω
3a	-100V	-150V	1h	90ms	100ms	0.1µs, 50Ω
3b	+75V	+100V	1h	90ms	100ms	0.1µs, 50Ω
4	-6V	-7V	1 pulse			100ms, 0.01Ω
5b(2)	+65V	+87V	1 pulse			400ms, 2Ω

1. The above test levels must be considered referred to V_{CC} = 13.5V except for pulse 5b.
2. Valid in case of external load dump clamp: 40V maximum referred to ground.

Table 13. Electrical transient requirements (part 2/3)

ISO 7637-2: 2004E Test pulse	Test level results	
	III	VI
1	C	C
2a	C	C
3a	C	C
3b	C	C
4	C	C
5b(1)	C	C

1. Valid in case of external load dump clamp: 40V maximum referred to ground.

Table 14. Electrical transient requirements (part 3/3)

Class	Contents
C	All functions of the device performed as designed after exposure to disturbance.
E	One or more functions of the device did not perform as designed after exposure to disturbance and cannot be returned to proper operation without replacing the device.

Obsolete Product(s) - Obsolete Product(s)

Figure 10. Waveforms

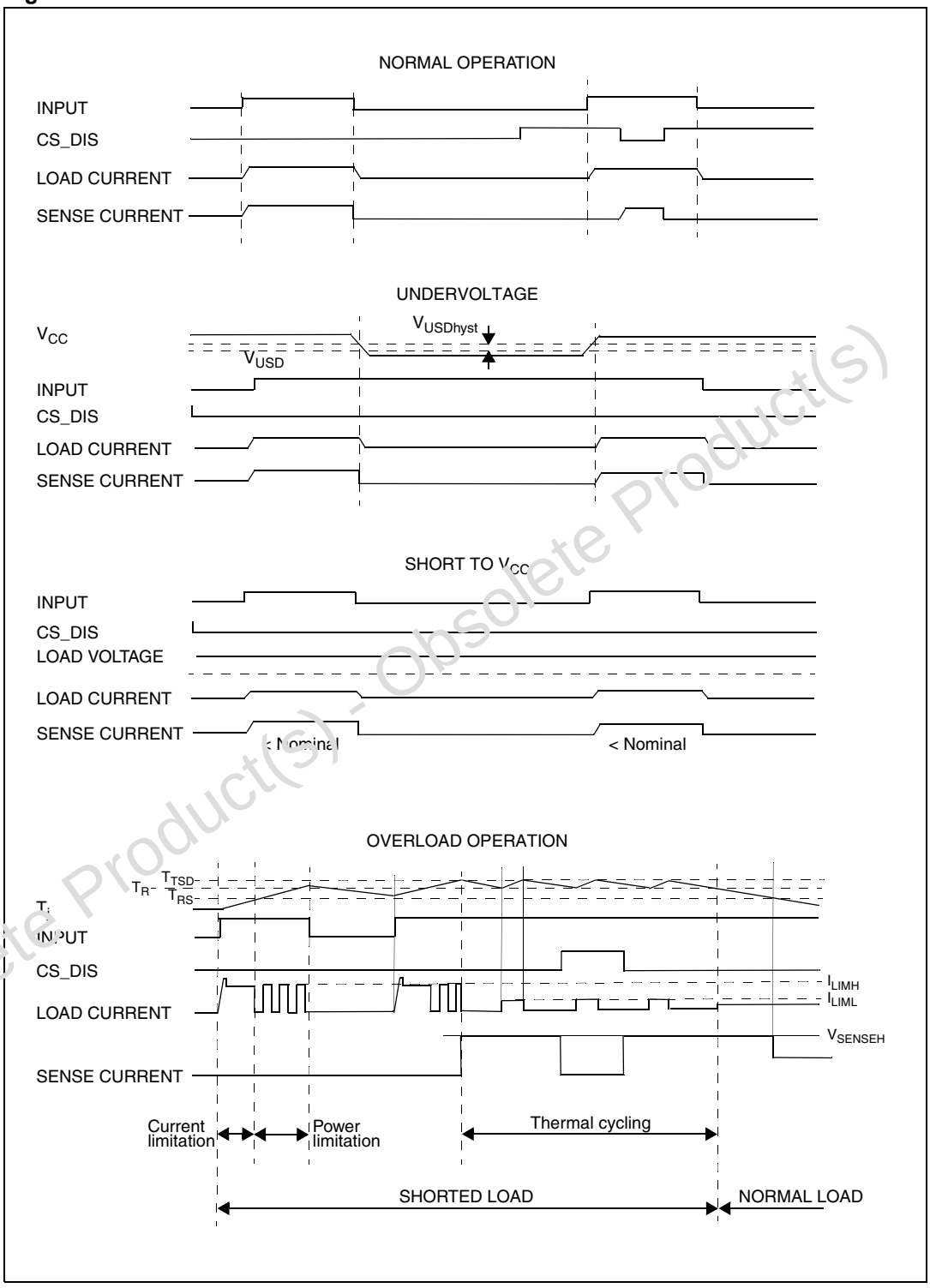

Obsolete Product(s) - Obsolete Product(s)

2.4 Electrical characteristics curves

Figure 11. Off-state output current

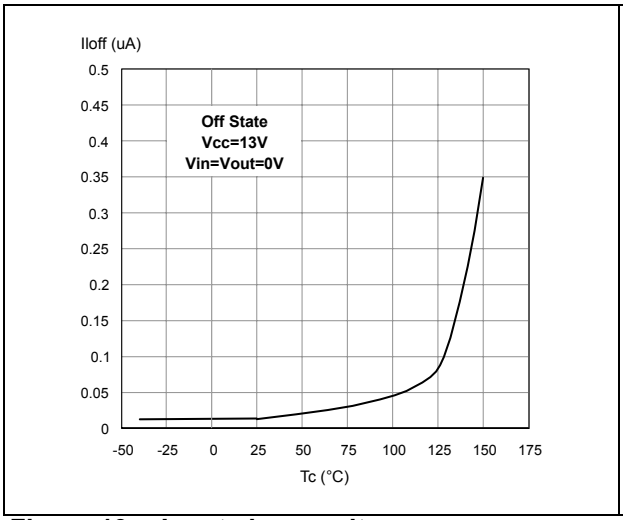

Figure 12. High level input current

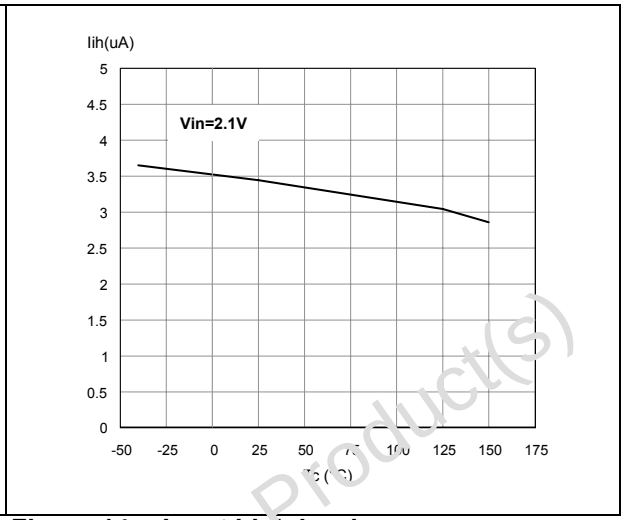

Figure 13. Input clamp voltage

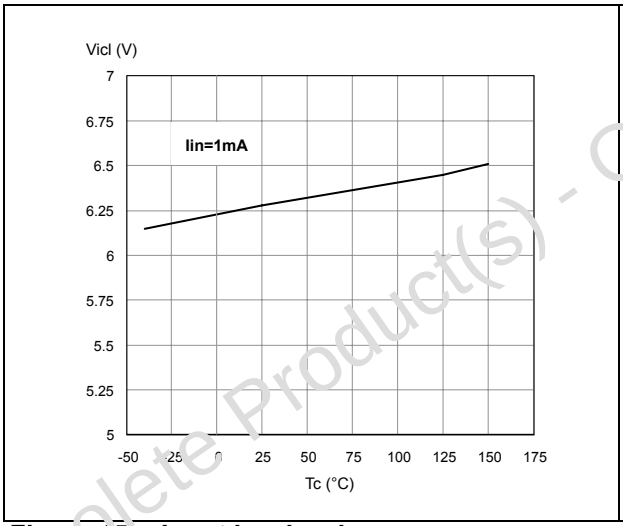

Figure 14. Input high level

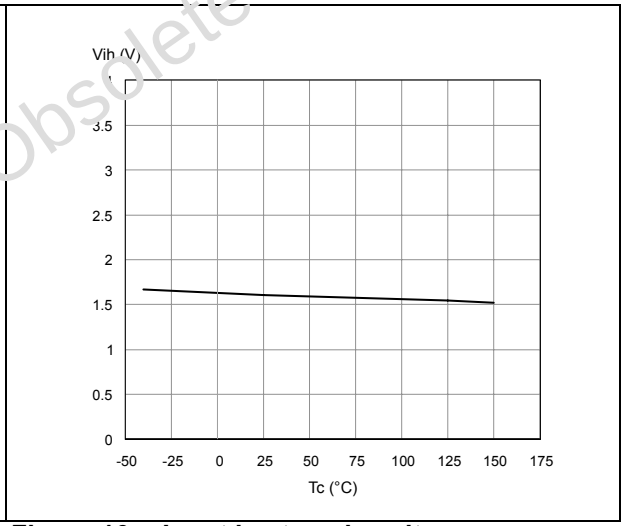

Figure 15. Input low level

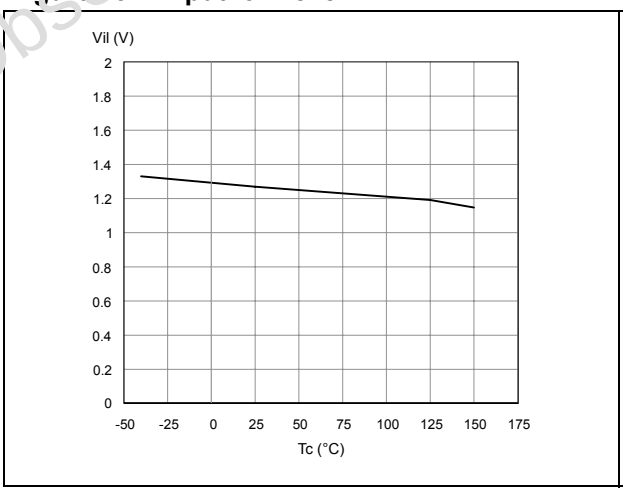

Figure 16. Input hysteresis voltage

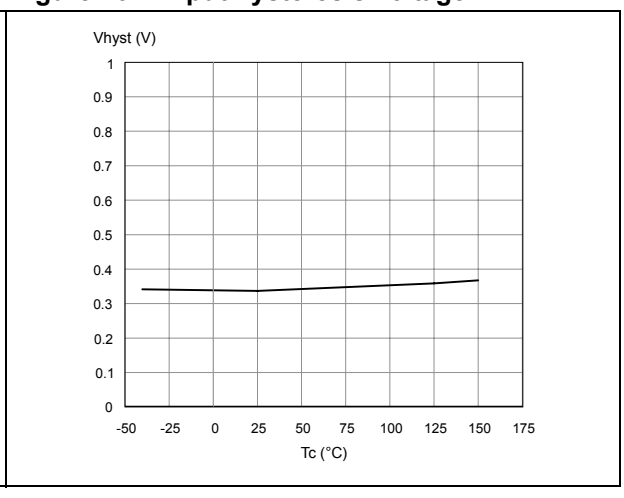

Obsolete Product(s) - Obsolete Product(s)

Figure 17. On-state resistance vs T_{case}

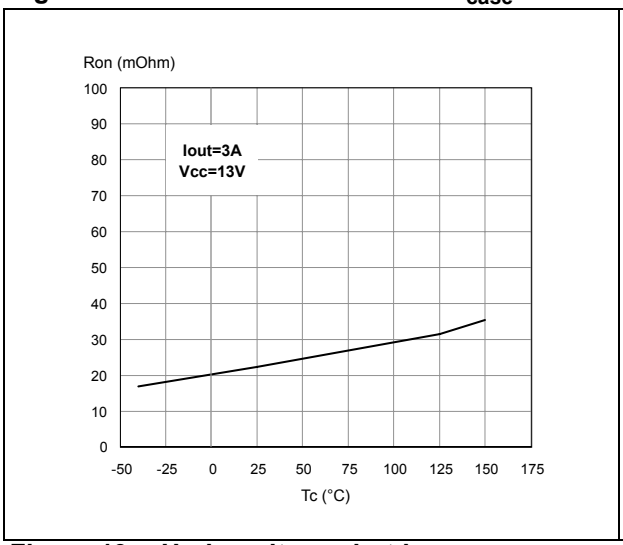

Figure 18. On-state resistance vs V_{CC}

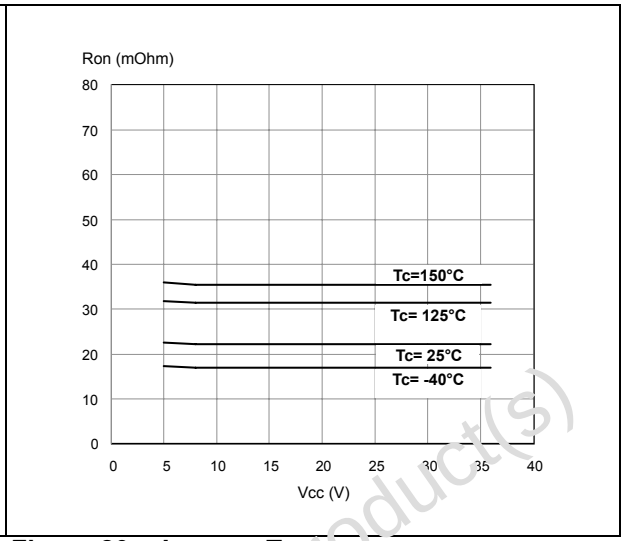

Figure 19. Undervoltage shutdown

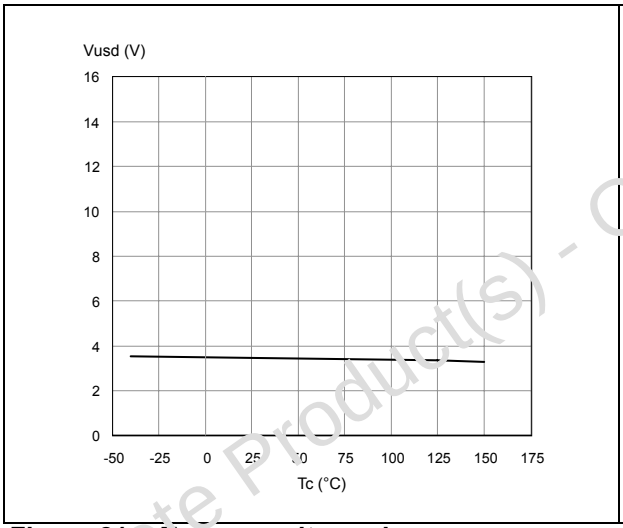

Figure 20. I_{LIMH} vs T_{case}

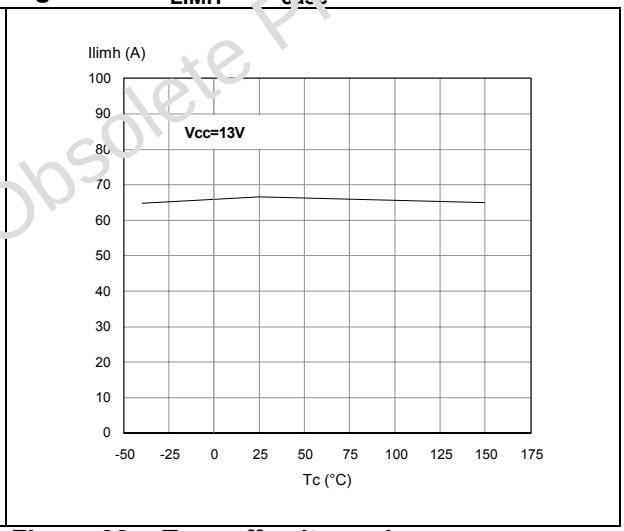

Figure 21. Turn-on voltage slope

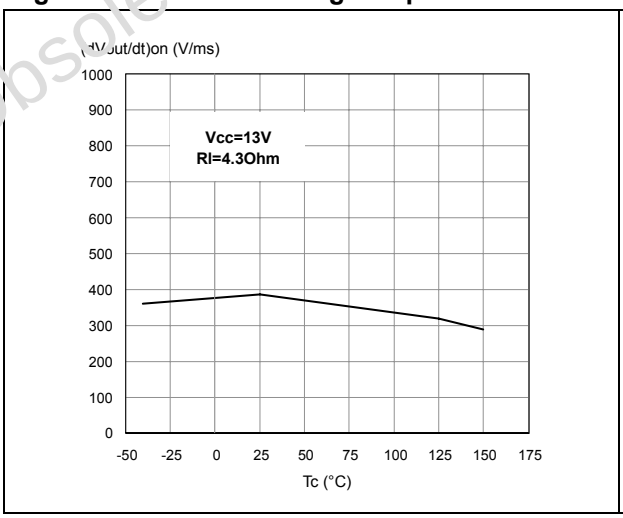

Figure 22. Turn-off voltage slope

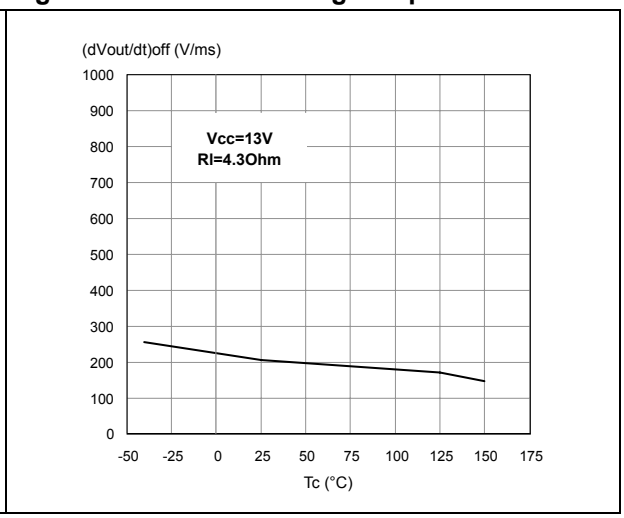

Obsolete Product(s) - Obsolete Product(s)

Figure 23. CS_DIS high level voltage

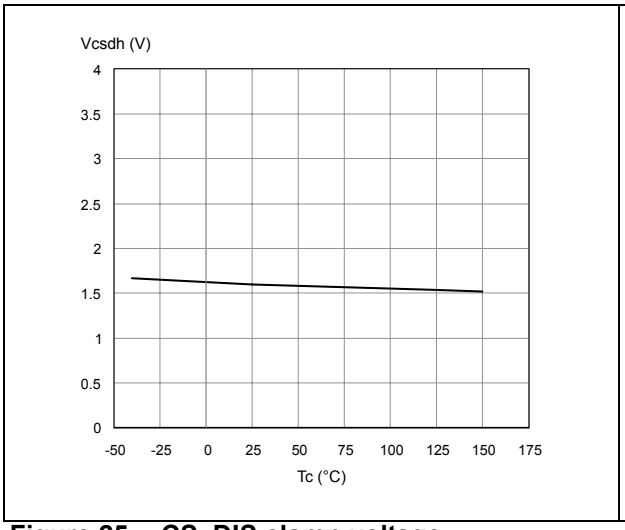

Figure 24. CS_DIS low level voltage

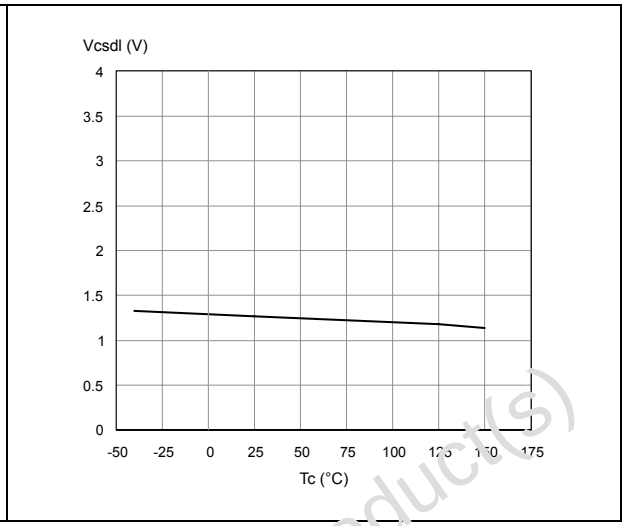

Figure 25. CS_DIS clamp voltage

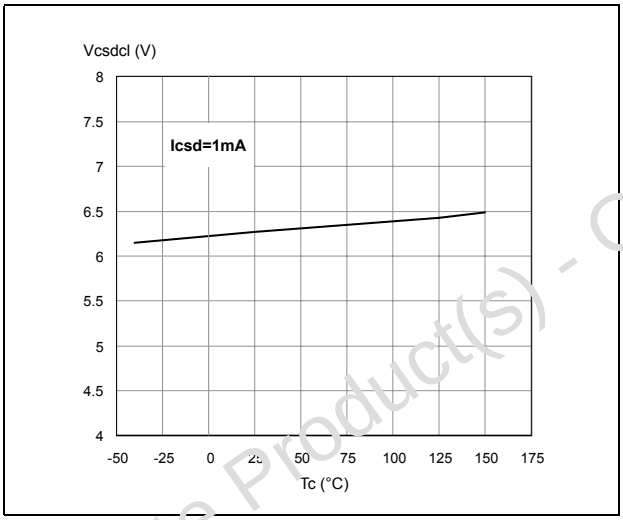

Obsolete Product(s) - Obsolete Product(s)

3 Application information

Figure 26. Application schematic

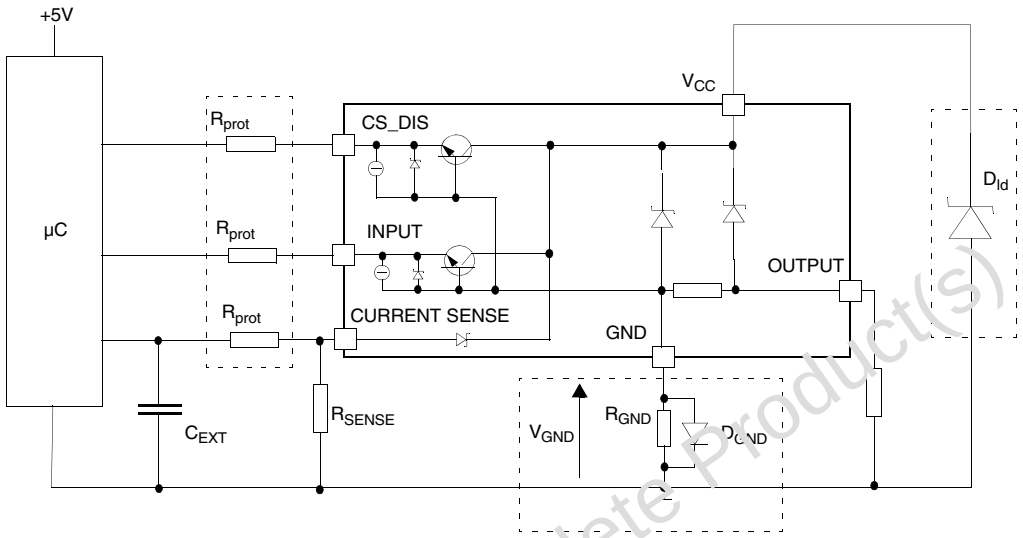

Note: Channel 2 has the same internal circuit as channel 1.

Obsolete Product(s) - Obsolete Product(s)

3.1 GND protection network against reverse battery

This section provides two solutions for implementing a ground protection network against reverse battery.

3.1.1 Solution 1: resistor in the ground line (R_{GND} only)

This first solution can be used with any type of load.

The following formulas indicate how to dimension the R_{GND} resistor:

1. $R_{GND} \leq 600\ mV / (I_{S(on)max})$
2. $R_{GND} \geq (-V_{CC}) / (-I_{GND})$

where $-I_{GND}$ is the DC reverse ground pin current and can be found in the absolute maximum rating section of the device datasheet.

Power Dissipation in R_{GND} (when $V_{CC} < 0$ during reverse battery situations) is:

$$P_D = (-V_{CC})^2 / R_{GND}$$

This resistor can be shared among several different HSDs. Please note that the value of this resistor is calculated with formula (1), where $I_{S(on)max}$ becomes the sum of the maximum on-state currents of the different devices.

Please note that if the microprocessor ground is not shared by the device ground, the R_{GND} produces a shift ($I_{S(on)max} * R_{GND}$) in the input thresholds and the status output values. This shift varies depending on how many devices are ON in the case of several high-side drivers sharing the same R_{GND}.

If the calculated power dissipation leads to a large resistor or several devices have to share the same resistor, then ST suggests to utilize the following Solution 2.

3.1.2 Solution 2: diode (D_{GND}) in the ground line

If the device drives an inductive load, insert a resistor (R_{GND} = 1 kΩ) in parallel to D_{GND}.

This small signal diode can be safely shared among several different HSDs. Also in this case, the presence of the ground network produces a shift (≈600 mV) in the input threshold and in the status output values if the microprocessor ground is not common to the device ground. This shift does not vary if more than one HSD shares the same diode/resistor network.

3.2 Load dump protection

D_{ld} is necessary (Voltage Transient Suppressor) if the load dump peak voltage exceeds the V_{CC} maximum DC rating. The same applies if the device is subject to transients on the V_{CC} line that are greater than the ones shown in the ISO 7637-2:2004E table.

3.3 MCU I/Os protection

If a ground protection network is used and negative transients are present on the V_{CC} line, the control pins are pulled negative. ST suggests to insert an in-line resistor (R_{prot}) to prevent the microcontroller I/O pins from latch-up.

The value of these resistors is a compromise between the leakage current of microcontroller and the current required by the HSD I/Os (input levels compatibility) with the latch-up limit of microcontroller I/Os.

$-V_{CCpeak}/I_{latchup} \le R_{prot} \le (V_{OH\mu C}-V_{IH}-V_{GND}) / I_{IHmax}$

Calculation example:

For V_{CCpeak} = -100 V and $I_{latchup} \ge$ 20 mA; $V_{OH\mu C} \ge$ 4.5 V

5 kΩ ≤ R_{prot} ≤ 65 kΩ

Recommended values: R_{prot} = 10 kΩ, C_{EXT} = 10 nF.

Obsolete Product(s) - Obsolete Product(s)

3.4 Maximum demagnetization energy (V_{CC} = 13.5 V)

Figure 27. Maximum turn-off current versus inductance (for each channel)

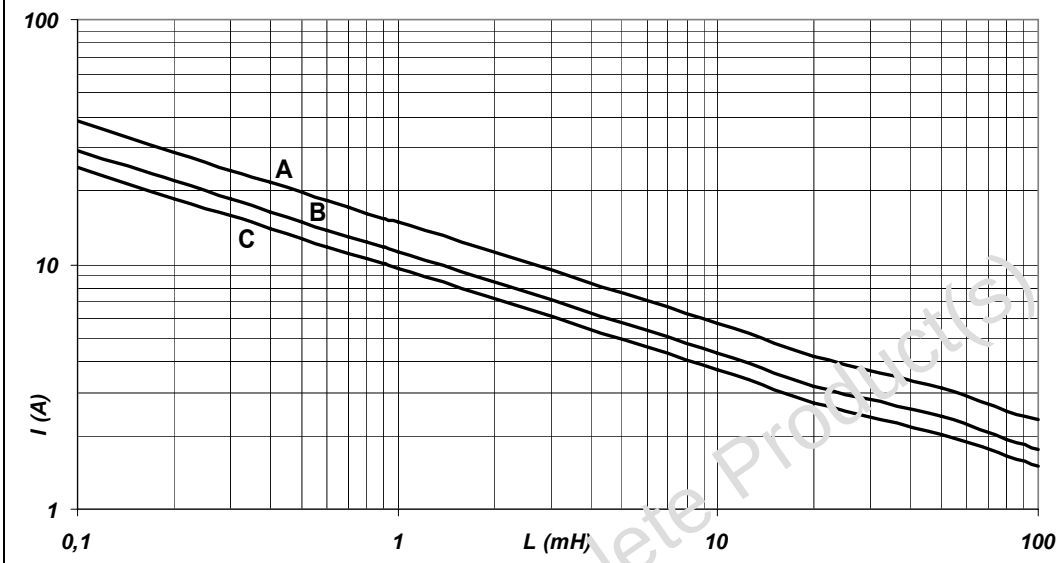

A: T_{jstart} = 150 °C single pulse

B: T_{jstart} = 100 °C repetitive pulse

C: T_{jstart} = 125 °C repetitive pulse

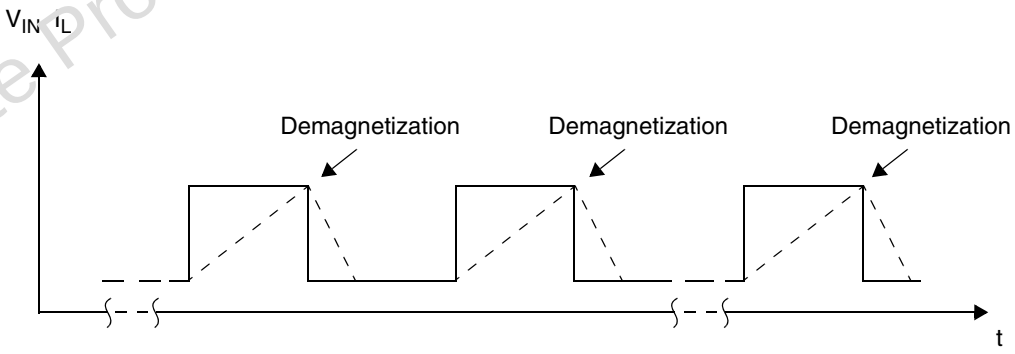

Note:
Values are generated with R_L = 0 Ω. In case of repetitive pulses, T_{jstart} (at beginning of each demagnetization) of every pulse must not exceed the temperature specified above for curves A and B.

Obsolete Product(s) - Obsolete Product(s)

4 Package and thermal data

4.1 PowerSSO-24™ thermal data

Figure 28. PowerSSO-24™ PC board

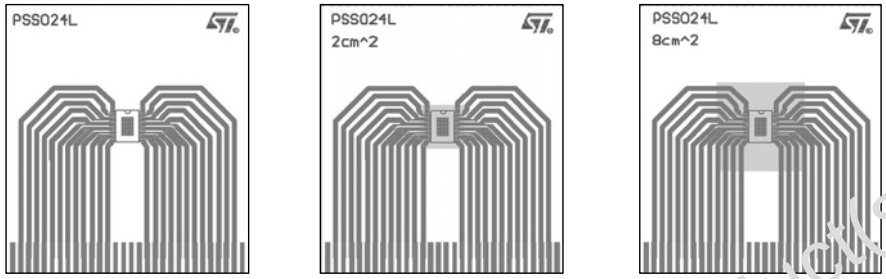

Note:
Layout condition of R_{th} and Z_{th} measurements (PCB: Double layer, Thermal Vias, FR4 area = 77 mm x 86 mm, PCB thickness = 1.6 mm, Cu thickness = 70 µm (front and back side), Copper areas: from minimum pad layout to 8 cm^2).

Figure 29. $R_{thj\text{-}amb}$ vs PCB copper area in open box free air condition (one channel ON)

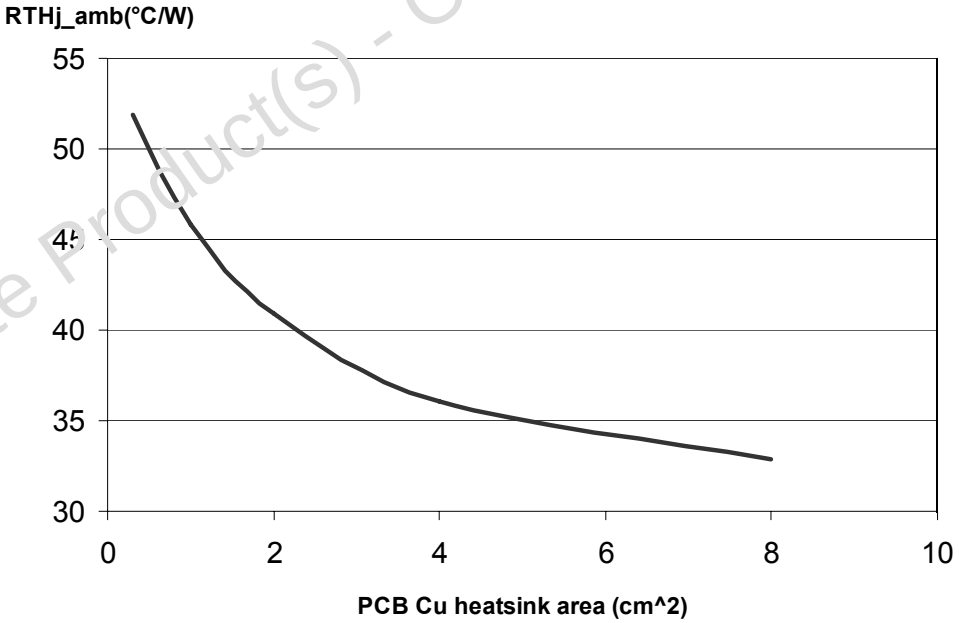

Obsolete Product(s) - Obsolete Product(s)

Figure 30. PowerSSO-24™ thermal impedance junction to ambient single pulse (one channel ON)

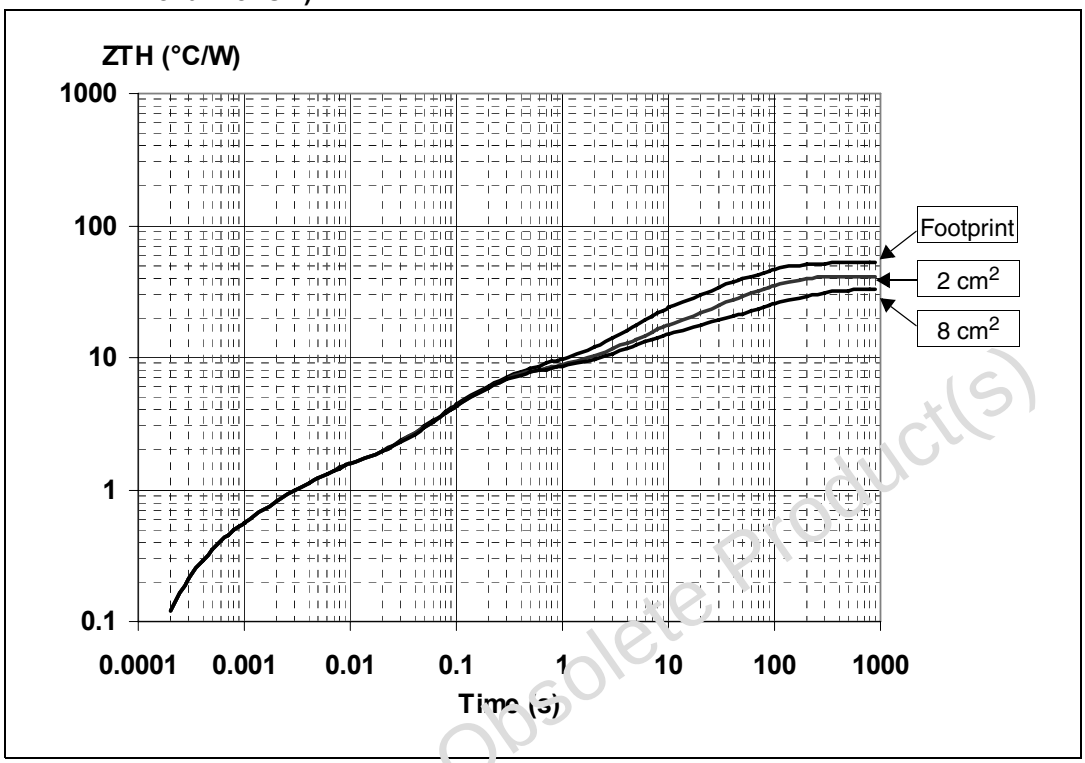

Equation 1: pulse calculation formula

$$Z_{TH\delta} = R_{TH} \cdot \delta + Z_{THtp}(1-\delta)$$

where $\delta = t_P/T$

Figure 31. Thermal fitting model of a double channel HSD in PowerSSO-24™

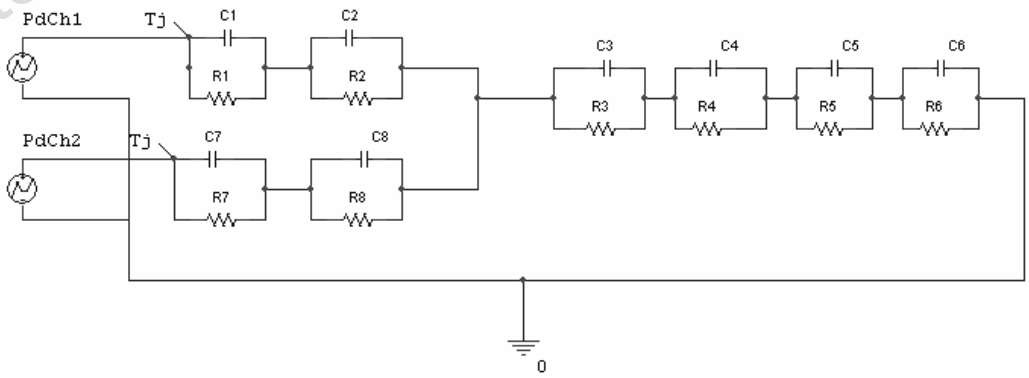

Note: Values are given in *Table 11*.

Obsolete Product(s) - Obsolete Product(s)

Table 15. Thermal parameters

Area/Island (cm^2)	Footprint	2	8
R1 (°C/W)	0.28		
R2 (°C/W)	0.9		
R3 (°C/W)	6		
R4 (°C/W)	7.7		
R5 (°C/W)	9	9	8
R6 (°C/W)	28	17	10
R7 (°C/W)	0.28		
R8 (°C/W)	0.9		
C1 (W.s/°C)	0.001		
C2 (W.s/°C)	0.003		
C3 (W.s/°C)	0.025		
C4 (W.s/°C)	0.75		
C5 (W.s/°C)	1	4	9
C6 (W.s/°C)	2.2	5	17
C7 (W.s/°C)	0.001		
C8 (W.s/°C)	0.003		

Obsolete Product(s) - Obsolete Product(s)

5 Package and packing information

5.1 ECOPACK® packages

In order to meet environmental requirements, ST offers these devices in different grades of ECOPACK® packages, depending on their level of environmental compliance. ECOPACK® specifications, grade definitions and product status are available at: www.st.com.

ECOPACK® is an ST trademark.

5.2 Package mechanical data

Figure 32. PowerSSO-24™ package dimensions

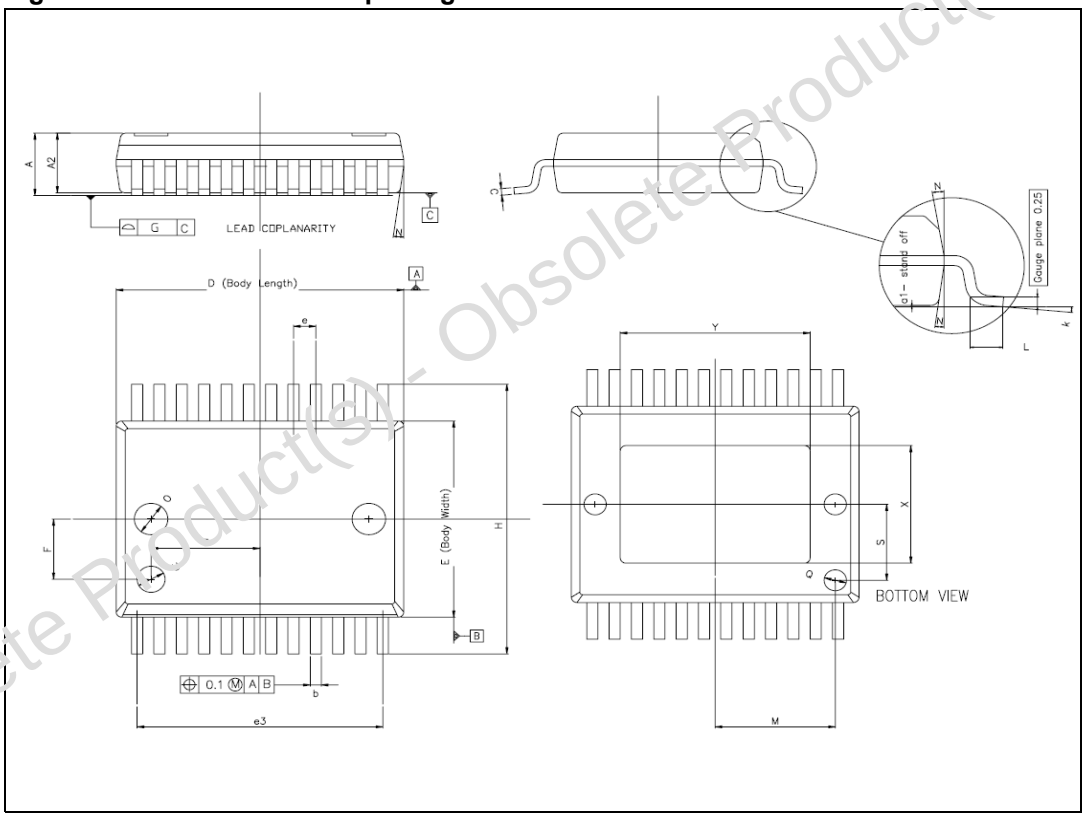

Obsolete Product(s) - Obsolete Product(s)

Table 16. PowerSSO-24™ mechanical data

Symbol	Millimeters		
	Min	Typ	Max
A			2.45
A2	2.15		2.35
a1	0		0.1
b	0.33		0.51
c	0.23		0.32
D	10.10		10.50
E	7.4		7.6
e		0.8	
e3		8.8	
F		2.3	
G			0.1
H	10.1		10.5
h			0.4
k	0°		8°
L	0.55		0.85
O		1.2	
Q		0.8	
S		2.9	
T		3.65	
U		1.0	
N			10°
X	4.1		4.7
Y	6.5		7.1

Obsolete Product(s) - Obsolete Product(s)

5.3 Packing information

Figure 33. PowerSSO-24™ tube shipment (no suffix)

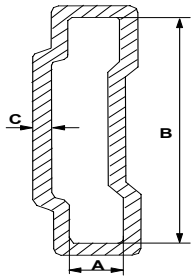

Base Qty	49
Bulk Qty	1225
Tube length (±0.5)	532
A	3.5
B	13.8
C (±0.1)	0.6

All dimensions are in mm.

Figure 34. PowerSSO-24™ tape and reel shipment (suffix "TR")

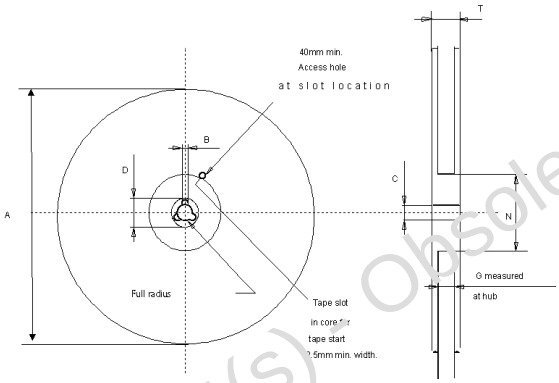

REEL DIMENSIONS

Base Qty	1000
Bulk Qty	1000
A (max)	330
B (min)	1.5
C (±0.2)	13
F	20.2
G (+2 / -0)	24.4
N (min)	100
T (max)	30.4

TAPE DIMENSIONS

According to Electronic Industries Association (EIA) Standard 481 rev. A, Feb. 1986

Tape width	**W**	24
Tape hole spacing	**P0 (±0.1)**	4
Component Spacing	**P**	12
Hole Diameter	**D (±0.05)**	1.55
Hole Diameter	**D1 (min)**	1.5
Hole Position	**F (±0.1)**	11.5
Compartment Depth	**K (max)**	2.85
Hole Spacing	**P1 (±0.1)**	2

All dimensions are in mm.

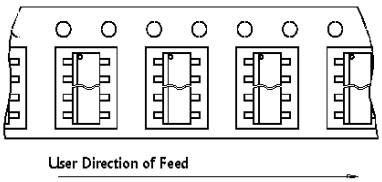

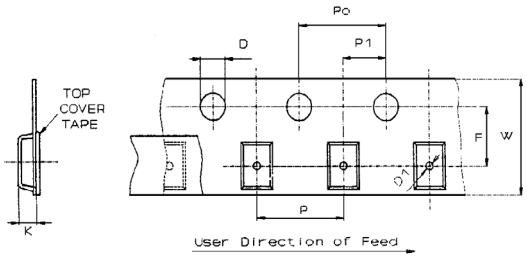

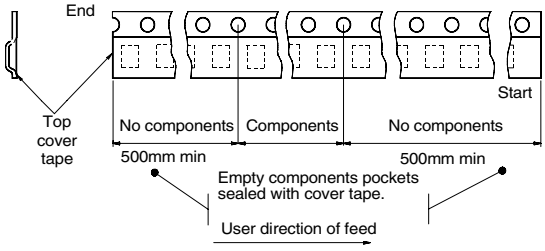

Obsolete Product(s) Obsolete Product(s)

6 Revision history

Table 17. Document revision history

Date	Revision	Changes
28-Mar-2007	1	Initial release
02-Jul-2009	2	Updated *Table 16: PowerSSO-24™ mechanical data*
23-Jul-2009	3	Updated *Figure 32: PowerSSO-24™ package dimensions*. Updated *Table 16: PowerSSO-24™ mechanical data*: – Deleted G1 row – Added O, Q, S, T and U rows
08-Feb-2010	4	Updated I_{LIMH} value from 41 A to 60 A
22-Jul-2010	5	Updated *Table 1: Device summary*. *Table 10: Current sense (8 V < V_{CC} < 16 V)*: – Updated K_2 values and test conditions Updated *Figure 6: I_{OUT}/I_{SENSE} vs I_{OUT}*
05-Aug-2010	6	*Table 10: Current sense (8 V < V_{CC} < 16 V)*: – Updated K_1 minimum value at T_j = 25 °C to 150 °C

Obsolete Product(s) - Obsolete Product(s)

Please Read Carefully:

Information in this document is provided solely in connection with ST products. STMicroelectronics NV and its subsidiaries ("ST") reserve the right to make changes, corrections, modifications or improvements, to this document, and the products and services described herein at any time, without notice.

All ST products are sold pursuant to ST's terms and conditions of sale.

Purchasers are solely responsible for the choice, selection and use of the ST products and services described herein, and ST assumes no liability whatsoever relating to the choice, selection or use of the ST products and services described herein.

No license, express or implied, by estoppel or otherwise, to any intellectual property rights is granted under this document. If any part of this document refers to any third party products or services it shall not be deemed a license grant by ST for the use of such third party products or services, or any intellectual property contained therein or considered as a warranty covering the use in any manner whatsoever of such third party products or services or any intellectual property contained therein.

UNLESS OTHERWISE SET FORTH IN ST'S TERMS AND CONDITIONS OF SALE ST DISCLAIMS ANY EXPRESS OR IMPLIED WARRANTY WITH RESPECT TO THE USE AND/OR SALE OF ST PRODUCTS INCLUDING WITHOUT LIMITATION IMPLIED WARRANTIES OF MERCHANTABILITY, FITNESS FOR A PARTICULAR PURPOSE (AND THEIR EQUIVALENTS UNDER THE LAWS OF ANY JURISDICTION), OR INFRINGEMENT OF ANY PATENT, COPYRIGHT OR OTHER INTELLECTUAL PROPERTY RIGHT.

UNLESS EXPRESSLY APPROVED IN WRITING BY AN AUTHORIZED ST REPRESENTATIVE, ST PRODUCTS ARE NOT RECOMMENDED, AUTHORIZED OR WARRANTED FOR USE IN MILITARY, AIR CRAFT, SPACE, LIFE SAVING, OR LIFE SUSTAINING APPLICATIONS, NOR IN PRODUCTS OR SYSTEMS WHERE FAILURE OR MALFUNCTION MAY RESULT IN PERSONAL INJURY, DEATH, OR SEVERE PROPERTY OR ENVIRONMENTAL DAMAGE. ST PRODUCTS WHICH ARE NOT SPECIFIED AS "AUTOMOTIVE GRADE" MAY ONLY BE USED IN AUTOMOTIVE APPLICATIONS AT USER'S OWN RISK.

Resale of ST products with provisions different from the statements and/or technical features set forth in this document shall immediately void any warranty granted by ST for the ST product or service described herein and shall not create or extend in any manner whatsoever, any liability of ST.

Obsolete Product(s) - Obsolete Product(s)

ST and the ST logo are trademarks or registered trademarks of ST in various countries.

Information in this document supersedes and replaces all information previously supplied.

The ST logo is a registered trademark of STMicroelectronics. All other names are the property of their respective owners.

© 2010 STMicroelectronics - All rights reserved

STMicroelectronics group of companies

Australia - Belgium - Brazil - Canada - China - Czech Republic - Finland - France - Germany - Hong Kong - India - Israel - Italy - Japan - Malaysia - Malta - Morocco - Philippines - Singapore - Spain - Sweden - Switzerland - United Kingdom - United States of America

www.st.com