swissbit®

Product Data Sheet

Industrial M.2 PCIe SSD

N-20m2 Series

PCIe 3.1, 3D TLC

Industrial Temperature Grade

Date: November 27, 2020
Revision: 1.03







Made in Germany

Contents

1. PRODUCT SUMMARY 3
2. PRODUCT FEATURES 4
3. ORDERING INFORMATION 5
4. PRODUCT DESCRIPTION 6
   - 4.1 Performance Specifications 7
   - 4.2 Current Consumption 7
   - 4.3 Environmental Specifications 7
   - 4.4 Regulatory Compliance 8
   - 4.5 Mechanical Specifications 8
   - 4.6 Reliability and Endurance 8
   - 4.7 Drive Geometry Specification 9
5. ELECTRICAL INTERFACE 10
6. PACKAGE MECHANICAL 12
7. NVME COMMANDS 14
8. IDENTIFY DEVICE INFORMATION 15
9. HEALTH MONITORING FUNCTIONALITY 17
10. PART NUMBER DECODER 21
11. MARKING SPECIFICATION 23
    - 11.1 Top View 23
    - 11.2 Print on the label 23
12. REVISION HISTORY 24

N-20m2 Series – Industrial M.2 PCIe SSD
15 GBytes up to 480 GBytes

1. Product Summary

- **Capacities:** 15 GBytes, 30 GBytes, 60 GBytes, 120 GBytes, 240 GBytes, 480 GBytes
- **Form Factor:** PCI Express® M.2 (2230/2242/2280, S4) (30/42/80 mm x 22 mm x 2.63 mm)
- **Compliance[1]:** PCI Express (PCIe) Specification Revision 3.1
- **Interface:** Gen3 x (2), 4 Lanes
  - Drive operates in x1 mode in x1 M.2 PCIe slots
  - Drive operates in x2 mode in x2 M.2 PCIe slots
  - Drive operates in (x2), x4 mode in x4 M.2 PCIe slots
- **Command Sets:** Supports NVMe 1.3
- **Performance**:
  - Read Performance: Sequential Read up to 1,773 MBytes/s, Random Read 4K up to 140,000 IOPS
  - Write Performance: Sequential Write up to 827 MBytes/s, Random Write 4K up to 131,000 IOPS
- **Host Memory Buffer (HMB):** Support for increased random performance
- **Operating Temperature Range[2]:**
  - Industrial: -40 °C to 85 °C
- **Storage Temperature Range:** -40 °C to 85 °C
- **Operating Voltage:** 3.3, 1.8 and 0.9V supply voltages
- **Low Power Consumption**
- **Power:**
  - Power States PS0, PS1, PS2, PS3 and PS4
  - Thermal Throttling supported
- **Data Retention:** 10 Years @ Life Begin; 1 Year @ Life End, @40°C
- **Endurance in TeraBytes Written (TBW) @ 240GB capacity:**
  - Client ≥ 190
- **Shock/Vibration:** 1,500 *g* / 50 *g*
- **High-Performance Processor with Integrated, Parallel Flash Interface Engines:**
  - Triple-Level Cell (TLC) 3D NAND Flash
  - LDPC Code ECC with up to 120 bit correction per 1 KByte page
- **High Reliability:**
  - Mean Time Between Failure (MTBF): > 2,000,000 hours
  - Data Reliability: < 1 non-recoverable error per 10^{16} bits read

[1] To check the compatibility of the customer system and the storage device is part of the customer's responsibility. Swissbit can provide guidance and support on request.

[2] Adequate airflow is required to ensure the temperature, as reported in the S.M.A.R.T. data, does not exceed 125°C (industrial temperature drive) and 110°C (commercial temperature drive) respectively.

2. Product Features

- Dynamic and Static Wear Leveling
- Subpage Mode Flash Translation Layer (FTL)
- Data Care Management
  - Active: Adaptive Read Refresh
  - Passive: Background Media Scan
- Lifetime Enhancements
  - Dynamic Bad Block Remapping
  - Write Amplification Reduction
- Power Fail Data Loss Protection
- Data set management support (TRIM)
- Active State Power Management (ASPM) Support
- In-Field Firmware Update[3]
- Enterprise-Grade Self-Monitoring, Analysis, and Reporting Technology (S.M.A.R.T.)
- 30 µinch Gold-Plated Connector (IPC-6012B Class 2 Compliant)
- End-to-End (E2E) Data Protection
- AES256 Encryption (on request)
- Life Cycle Management
- Controlled "Locked" BOM
- RoHS / REACH Compliant
- Swissbit Life Time Monitoring (SBLTM) Tool and SDK for SBLTM (on request)



[3] The support of In-Field FW update capabilities on host systems is recommended.

3. Ordering Information

Table 1: Standard Product List

Capacity	Part Number	Number of Lanes
15 GBytes	SFPC015GMxEC1T0-I-5E-yz6-STD	4
30 GBytes	SFPC030GMxEC1T0-I-5E-yz6-STD	
60 GBytes	SFPC060GMxEC2T0-I-5E-yz6-STD	
120 GBytes	SFPC120GMxEC4T0-I-5E-yz6-STD	
240 GBytes	SFPC240GMxEC4T0-I-6F-yz6-STD	
480 GBytes	SFPC480GMxEC4WD-I-6F-yz6-STD	
480 GBytes	SFPC480GMxEB4WD-I-6F-yz6-STD	2

x = product generation; y = form type; z= firmware revision

Table 2: Available Part Numbers

Capacity	Part Number – Industrial Temperature			
	2230	2242	2280	Number of Lanes
15 GBytes	SFPC015GM1EC1T0-I-5E-A16-STD	SFPC015GM1EC1T0-I-5E-116-STD	SFPC015GM1EC1T0-I-5E-516-STD	4
30 GBytes	SFPC030GM1EC1T0-I-5E-A16-STD	SFPC030GM1EC1T0-I-5E-116-STD	SFPC030GM1EC1T0-I-5E-516-STD	
60 GBytes	SFPC060GM1EC2T0-I-5E-A16-STD	SFPC060GM1EC2T0-I-5E-116-STD	SFPC060GM1EC2T0-I-5E-516-STD	
120 GBytes	SFPC120GM1EC4T0-I-5E-A16-STD	SFPC120GM1EC4T0-I-5E-116-STD	SFPC120GM1EC4T0-I-5E-516-STD	
240 GBytes	SFPC240GM1EC4T0-I-6F-A16-STD	SFPC240GM1EC4T0-I-6F-116-STD	SFPC240GM1EC4T0-I-6F-516-STD	
480 GBytes	SFPC480GM2EC4WD-I-6F-A16-STD	SFPC480GM2EC4WD-I-6F-116-STD	SFPC480GM2EC4WD-I-6F-516-STD	
480 GBytes	SFPC480GM1EB4WD-I-6F-A16-STD	SFPC480GM1EB4WD-I-6F-116-STD	SFPC480GM1EB4WD-I-6F-516-STD	2

4. Product Description

The Swissbit® N-20m2 Solid State Drive (SSD) leverages the M.2 standard and NVMe standard to support a PCIe electrical interface as well as AES encryption, E2E data protection and TCG Opal standards. The NVMe controller and the newest 3D NAND flash technology provides robust, non-volatile storage solution for today's embedded computing applications. A functional block diagram of the N-20m2 SSD is provided below in Figure 1.

Figure 1: N-20m2 Functional Block Diagram

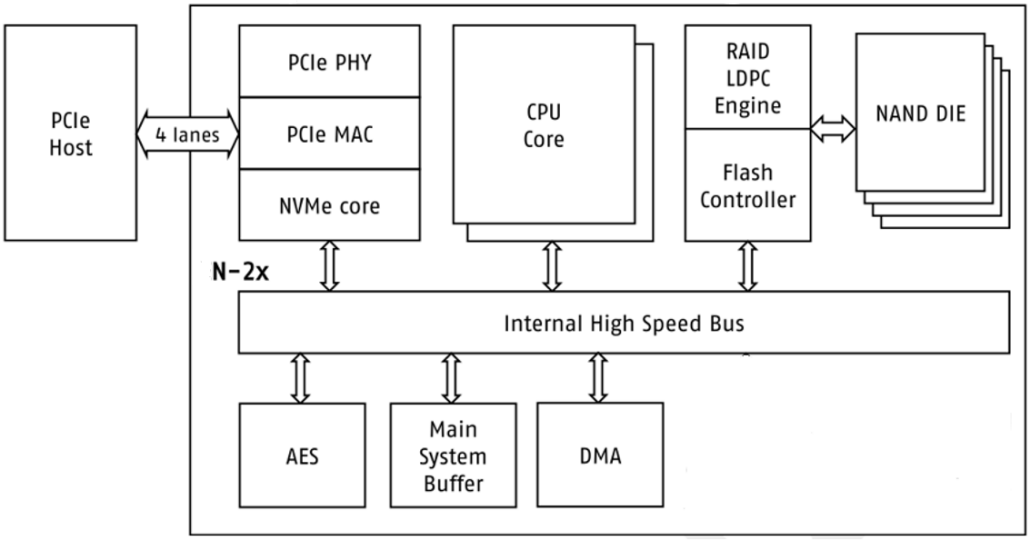

The N-20m2 SSD incorporates a 75-position edge connector with M key to support host read/write, control, and power activity per the applicable JEDEC specification.

The on-board NVMe controller manages the interface between the host and the non-volatile NAND flash memory array. The controller is designed to support PCIe interface speeds and utilizes a dual processing core, providing an optimum balance between read/write performance, Data Care Management, and power fail protection.

Swissbit's N-20m2 SSDs deliver an impressive IOPS rate and highest endurance by combining Bit Cost Scalable (BiCS) 3D flash technology with a high-end controller architecture, firmware, and an optimized configuration. The SSDs are designed for applications requiring high data transfer rates (see Table 3: Read/Write Performance). This performance is achieved through HMB support, a 4-channel flash controller and 4-lane PCIe interface.

An on-controller Error Correction Code (ECC) engine provides the N-20m2 hardware ECC, which is capable of correcting up to 120 bits per 1 KByte page. This engine, combined with Swissbit's Data Care Management firmware, provides both passive and active data management strategies to ensure data integrity and extract the maximum possible endurance and reliability from the NAND flash array. These strategies include, but are not limited to, Global Wear Leveling, Adaptive Read Refresh, and Dynamic Block Remapping.

Related Documentation

- NVM Express – Revision 1.3, (https://nvmexpress.org/)
- PCI Express M.2 standard – PCI Express M.2 Specification, Revision 3.0, June 26, 2019 (https://pcisig.com)

4.1 Performance Specifications

The N-20m2 read/write sequential and random CDM performance benchmarks are detailed in the following Table 3.

Table 3: Read/Write Performance[4]

Capacity	Sequential Read (MBPS)		Sequential Write (MBPS)		Random Read 4K (IOPS)		Random Write 4K (IOPS)	
	HMB on	HMB off	HMB on	HMB off	HMB on	HMB off	HMB on	HMB off
15 GBytes	297	293	102	63	21,000	16,000	10,000	8,000
30 GBytes	297	293	103	63	21,000	16,000	20,000	14,000
60 GBytes	594	584	208	156	41,000	30,000	42,000	36,000
120 GBytes	1,184	1,145	385	205	80,000	41,400	69,000	45,000
240 GBytes	1,773	1,600	718	365	140,000	67,000	100,000	76,000
480 GBytes[5] 2-Lane	1,613	1,601	827	583	110,000	77,000	131,000	113,500
480 GBytes[5] 4-Lane	1,613	1,601	827	583	110,000	77,000	131,000	113,500

4.2 Current Consumption

The drive-level current consumption as a function of operating mode is shown in the following Table 4.

Table 4: Current Consumption Typical[6]

Capacity	Sequential Read	Sequential Write	Idle	PS3	PS4	Unit
15 GBytes	400	390	120 55[7]	18	15	mA
30 GBytes	400	390				
60 GBytes	480	440				
120 GBytes	630	510				
240 GBytes	710	630				
480 GBytes[5] 2-Lane	790	740	120 55[7]	19	15	
480 GBytes[5] 4-Lane	790	740	120 55[7]	19	15	

4.3 Environmental Specifications

4.3.1 Recommended Operating Conditions

The recommended operating conditions for the N-20m2 SSD are provided in the following Table 5.

Table 5: Recommended Operating Conditions[8]

Parameter	Value
Industrial Operating Temperature	-40 °C to 85 °C
Power Supply V_{CC} Voltage	3.3 V ± 5%

4.3.2 Recommended Storage Conditions

The recommended storage conditions are listed in the following Table 6.

[4] The values are measured using Crystal Disk Mark. Performance depends on flash type and number, file/cluster size, and burst speed.
[5] Target values
[6] All values are typical total values recorded at 25 °C
[7] With active ASPM (active state power management)
[8] Adequate airflow is required to ensure the temperature, as reported in the S.M.A.R.T. data, does not exceed 125°C (industrial temperature drive) and 110°C (commercial temperature drive) respectively.

Table 6: Recommended Storage Conditions[9]

Parameter	Value
Industrial Storage Temperature	-40 °C to 85 °C

4.3.3 Shock, Vibration and Humidity

The maximum shock, vibration and humidity conditions are listed in the following Table 7.

Table 7: Shock, Vibration and Humidity

Parameter	Value
Non-Operating Shock	1,500 *g*, 0.5 ms pulse duration, half-sine wave (IEC 60068-2-27 and JESD22-B110 cond. B)
Non-Operating Vibration	50 *g*, 80-2,000 Hz, 3 axes, 12 cycles (IEC 60068-2-6, MIL-STD-883 H Method 2007.3)
Humidity (Non-Condensing)	85% RH 85 °C, 1000 hrs, max. supply voltage (JESD22-A101B)

4.4 Regulatory Compliance

The N-20m2 devices comply with the directives and standards listed in the following Table 8.

Table 8: Regulatory Compliance

Abbreviation	Regulation/ Standard
EMC	(EU) 2014/30 (FCC) 47 CFR Part 15
RoHS	(EU) 2011/65/EU with 2015/863 and 2017/2102
REACh	(EU) 1907/2006 and 207/2011
WEEE	(EU) 2012/19

4.5 Mechanical Specifications

The N-20m2 SSD consists of a flash controller and NAND flash memory devices. The controller interfaces with a host system, allowing data to be written to and read from the flash memory array. Physical dimensions are detailed in the following Table 9. Figure 3 on page 12 illustrates the N-20m2 dimensions.

Table 9: Physical Dimensions

Physical Dimensions		Unit
Length	30.00/42.00/80.00±0.15	mm
Width	22.00±0.15	
Thickness (Max)	Max. 2.63	
Weight (Max Capacity, 2280)	≤5.50	g

4.6 Reliability and Endurance

The Mean Time Between Failure (MTBF) is specified to exceed the value listed in the following Table 10. Data reliability with effective error tolerance and data retention at the beginning and end of life is also provided.

Table 10: Reliability

Parameter	Value
MTBF (at 25 °C)	> 2,000,000 hours
Data Reliability	< 1 Non-Recoverable Error per 10^{16} Bits Read
Data Retention (up to 40°C)[10]	10 Years at Start (JESD47), 1 Year at EOL

[9] The retention at high temperature is reduced. The acceleration factor at 100°C compared with 40 or 55°C is very high, i.e. the initial retention from 10 years@55°C is reduced to 33 days@100°C based on NAND process node.

[10] NAND Flash data retention and endurance characteristics are defined according to JEDEC JESD47 and JESD22. The endurance limits of the storage shall be monitored by the life time information and simulated before field usage by the customer.

Endurance represented as both TeraBytes Written (TBW) and full Drive Writes Per Day (DWPD) for different application scenarios is provided in the following Table 11.

Table 11: Endurance[11, 12]

Capacity	Sequential		Client[13]		Enterprise	
	TBW	DWPD[14]	TBW	DWPD[14]	TBW	DWPD[14]
15 GBytes	24	1.46	15	0.9	4.5	0.28
30 GBytes	51	1.56	30	0.9	7.9	0.24
60 GBytes	105	1.61	62	0.9	9.3	0.14
120 GBytes	210	1.59	94	0.7	11.4	0.09
240 GBytes	417	1.58	190	0.7	22.4	0.09
480 GBytes[15]	tbd	tbd	tbd	tbd	84.2	0.16

4.7 Drive Geometry Specification

The N-20m2 drive geometry is set to report industry standard LBA settings per the IDEMA standard (LBA1-03). The values for each capacity are shown in the following Table 12.

Table 12: Drive Geometry

Raw Capacity	User Capacity[16]	Total LBA	User Addressable Bytes
		Decimal	(Unformatted)
16 GBytes	15 GBytes	29,323,728	15,013,748,736
32 GBytes	30 GBytes	58,626,288	30,016,659,456
64 GBytes	60 GBytes	117,231,408	60,022,480,896
128 GBytes	120 GBytes	234,441,648	120,034,123,776
256 GBytes	240 GBytes	468,862,128	240,057,409,536
512 GBytes	480 GBytes	937,703,088	480,103,981,056

[11] Client and Enterprise workloads follow the JEDEC JESD219 standard. Enterprise workload values are measured based on 168 hours of runtime. 1 TByte = 10^{12} bytes

[12] According to JEDEC (JESD47I), the time to write the full TBW is a minimum of 18 months. Higher average daily data volume or frequent writing below 0°C reduces the specified TBW. The values listed are estimates and are subject to change without notice

[13] Because the JEDEC master trace file for the Client workload is designed for capacities ≥ 60 GBytes, the TBW and DWPD values for the capacities below 60 GBytes are estimates

[14] DWPD values are based on a service life of 3 years. DWPD values with consideration of the limited lifetime warranty period of the storage device according to the used flash type and device capacity. Customer workload with higher DWPD values contributes to an earlier EOL of the storage device.

[15] Target values

[16] 1 GByte = 10^9 bytes

5. Electrical Interface

This 75-position m.2 connector (Figure 2) incorporates M key for Socket 2/Socket 3 PCIe-based SSDs and follows the applicable PCIe m.2 specification. The signal/pin assignments and descriptions are listed in the following Table 13.

Figure 2: N-20m2 Electrical Interface

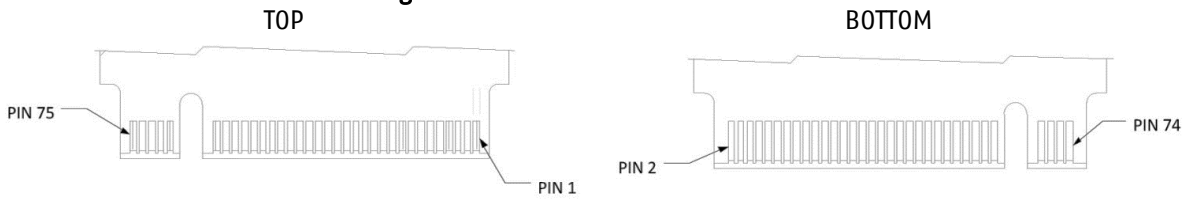

Table 13: Pin Assignment, Name and Description

Description	Assignment	Pin	Pin	Assignment	Description
Config_3	GND	1	2	+3.3V	3.3V Source
Ground	GND	3	4	+3.3V	3.3V Source
PCIe TX Differential Signal	PETn3*	5	6	NC	No Connect
PCIe TX Differential Signal	PETp3*	7	8	NC	No Connect
Ground	GND	9	10	DAS/DSS	DEVACT Device Activity Signal
PCIe RX Differential Signal	PERn3*	11	12	+3.3V	3.3V Source
PCIe RX Differential Signal	PERp3*	13	14	+3.3V	3.3V Source
Ground	GND	15	16	+3.3V	3.3V Source
PCIe TX Differential Signal	PETn2*	17	18	+3.3V	3.3V Source
PCIe TX Differential Signal	PETp2*	19	20	NC	No Connect[17]
Ground	GND	21	22	NC	No Connect
PCIe RX Differential Signal	PERn2*	23	24	NC	No Connect
PCIe RX Differential Signal	PERp2*	25	26	NC	No Connect
Ground	GND	27	28	NC	No Connect
PCIe TX Differential Signal	PETn1*	29	30	NC	No Connect
PCIe TX Differential Signal	PETp1*	31	32	NC	No Connect
Ground	GND	33	34	NC	No Connect
PCIe RX Differential Signal	PERn1*	35	36	NC	No Connect
PCIe RX Differential Signal	PERp1*	37	38	NC	No Connect
Ground	GND	39	40	NC	No Connect
PCIe TX Differential Signal	PETn0*	41	42	NC	No Connect
PCIe TX Differential Signal	PETp0*	43	44	NC	No Connect
Ground	GND	45	46	NC	No Connect
PCIe RX Differential Signal	PERn0*	47	48	NC	No Connect
PCIe RX Differential Signal	PERp0*	49	50	PERST#	PE-Reset (Functional Reset)
Ground	GND	51	52	CLKREQ#	Clock Request Signal; L1 PM
PCIe Reference Clock Signal	REFCLKn	53	54	PEWAKE#	PCIe PME Wake
PCIe Reference Clock Signal	REFCLKp	55	56	DNU	Reserved (do not use)
Ground	GND	57	58	DNU	Reserved (do not use)

[17] The write protect option is available on this pin upon request

Mechanical Notch M	-	59-65	60-66	-	Mechanical Notch M
RESET#	NC	67	68	NC	32.768 kHz Clock Supply
Config_1	NC	69	70	3.3V	Supply Pin, 3.3V
Ground	GND	71	72	3.3V	Supply Pin, 3.3V
Ground	GND	73	74	3.3V	Supply Pin, 3.3V
Config_2	GND	75			

*TX (transmit) and RX (receive) pins are labeled from the SSD view and must be connected with the reversed RX and TX signals of the host (i.e., TX to RX and RX to TX).

6. Package Mechanical

Figure 3: N-20m2 dimensions in mm

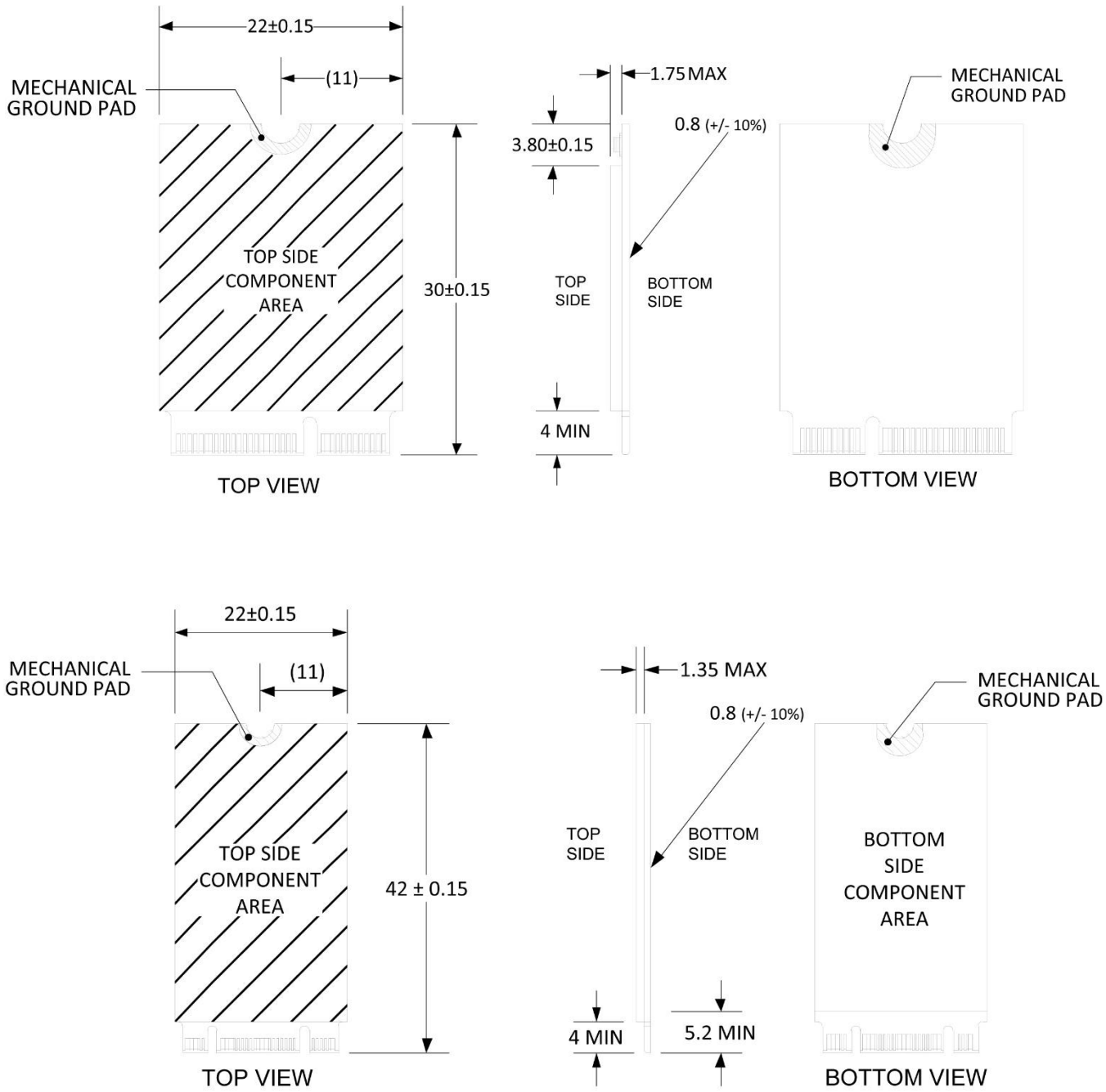

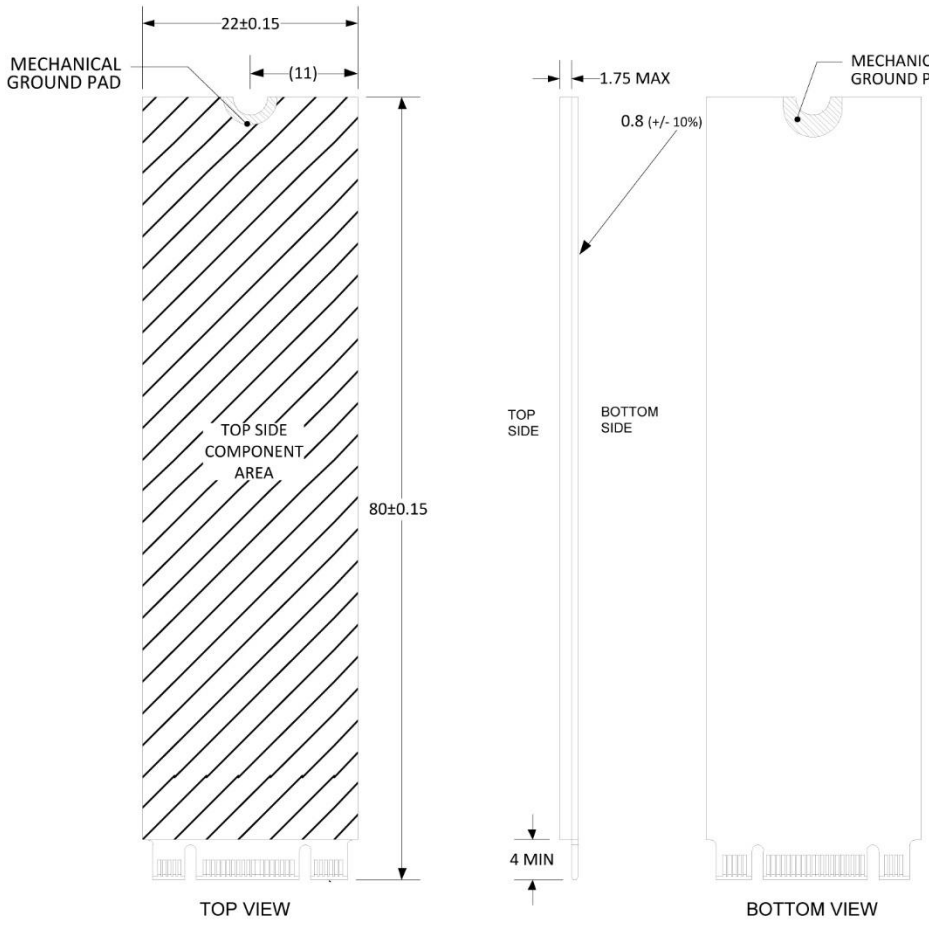

Figure 4: M.2 Connector Dimensions in mm

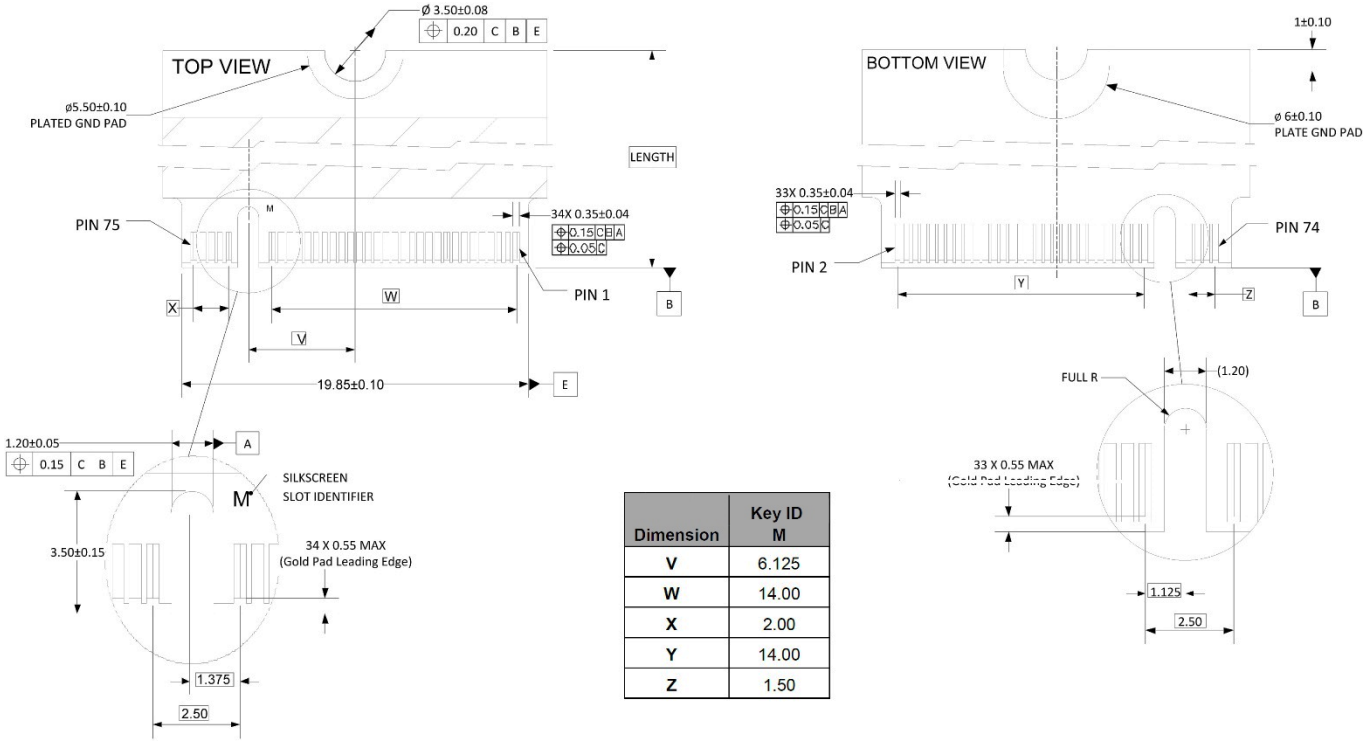

Dimension	Key ID M
V	6.125
W	14.00
X	2.00
Y	14.00
Z	1.50

7. NVMe Commands

This section provides information on the NVMe commands supported by the SSD. The commands are issued by loading the DWords in the command block with the supplied parameter, and then writing the command code to the register. See the following Table 14 for a list of NVMe commands the device supports. For details about setting up the command registers, see the latest NVMe Specification.

Table 14: NVMe Command Set

Command	Code	Command	Code
Admin Commands			
Delete I/O Submission Queue	00h	Create I/O Submission Queue	01h
Get Log Page	02h	Delete I/O Completion Queue	04h
Create I/O Completion Queue	05h	Identify	06h
Abort	08h	Set Features	09h
Get Features	0Ah	Asynchronous Event Request	0Ch
Firmware Commit	10h	Firmware Image Download	11h
Device Self-test	14h	Format NVM	80h
Sanitize	84h		
NVM Command Set			
Flush	00h	Write	01h
Read	02h	Write Uncorrectable	04h
Compare	05h	Write Zeroes	08h
Dataset Management	09h		
Command	**Code**	**Command**	**Code**
Admin Commands			
Delete I/O Submission Queue	00h	Create I/O Submission Queue	01h
Get Log Page	02h	Delete I/O Completion Queue	04h
Create I/O Completion Queue	05h	Identify	06h
Abort	08h	Set Features	09h
Get Features	0Ah	Asynchronous Event Request	0Ch
Firmware Commit	10h	Firmware Image Download	11h
Device Self-test	14h	Format NVM	80h
Sanitize	84h		
NVM Command Set			
Flush	00h	Write	01h
Read	02h	Write Uncorrectable	04h
Compare	05h	Write Zeroes	08h
Dataset Management	09h		

8. Identify Device Information

The following table describes the 4096 bytes of data the drive returns for the Identify command (06h).

Table 15: Identify Namespace Data Structure (CNS 00h)

Byte(s)	Default Value	Data Field Type Information
0-7	XXXXh[18]	Namespace Size (NSZE)
8-15	XXXXh[18]	Namespace Capacity (NCAP)
16-23	XXXXh[18]	Namespace Utilization (NUSE)
24	00h	Namespace Features (NSFEAT)
25	00h	Number of LBA Formats (NLBAF)
26	00h	Formatted LBA Size (FLBAS)
27	00h	Metadata Capabilities (MC)
28	00h	End-to -end Data Protection Capabilities (DPC
29	00h	End-to -end Data Protection Type Settings (DPS)
30	00h	Namespace Multi-path I/O and Namespace Sharing Capabilities (NMIC)
31	00h	Reservation Capabilities (RESCAP)
32	00h	Format Progress Indicator (FPI)
33	00h	Deallocate Logical Block Features (DLFEAT)
34-35	0000h	Namespace Atomic Write Unit Normal (NAWUN)
36-37	0000h	Namespace Atomic Write Unit Power Fail (NAWUPF)
38-39	0000h	Namespace Atomic Compare & Write Unit (NACWU)
40-41	0000h	Namespace Atomic Boundary Size Normal (NABSN)
42-43	0000h	Namespace Atomic Boundary Offset (NABO)
44-45	0000h	Namespace Atomic Boundary Size Power Fail (NABSPF)
46-47	0000h	Namespace Optimal IO Boundary (NOIOB)
48-63	All 00h	NVM Capacity (NVMCAP)
64-103	All 00h	Reserved
104-119	All 00h	Namespace Globally Unique Identifier (NGUID)
120-127	All 00h	IEEE Extended Unique Identifier (EUI64)
128-131	00090000h	LBA Format 0 Support (LBAF0)
132-191	All 00h	LBA Format 1 to 15 Support (LBAF1 – LBAF15)
192-383	All 00h	Reserved
384-4095	All 00h	Vendor Specific (VS)

Table 16: Identify Controller Data Structure (CNS 01h)

Byte(s)	Default Value	Data Field Type Information
0-1	1DD4h	PCI Vendor ID (VID)
2-3	1DD4h	PCI Subsystem Vendor ID (SSVID)
4-23	XXXXh[18]	Serial Number (SN)
24-63	XXXXh[18]	Model Number (MN)
64-71	XXXXh[18]	Firmware Version (FR)
72	06h	Recommended Arbitration Burst (RAB)
73-75	8C6078h	IEEE OUI Identifier (IEEE)

[18] Values depend on device configuration.

Byte(s)	Default Value	Data Field Type Information
76	00h	Controller Multi-Path I/O and Namespace Sharing Capabilities (CMIC)
77	06h	Maximum Data Transfer Size (MDTS)
78-79	0001h	Controller ID (CNTLID)
80-83	00010300h	Version (VER)
84-87	000249F0h	Runtime D3 Resume Latency (RTD3R)
88-91	00013880h	Runtime D3 Entry Latency (RTD3E)
92-95	00000200h	Optional Asynchronous Events Supported (OAES)
96-99	00000000h	Controller Attributes (CTRATT)
100-111	All 00h	Reserved
112-127	All 00h	FRU Globally Unique Identifier (FGUID)
128-255	All 00h	Reserved
256-257	0016h	Optional Admin Command Support (OACS)
258	04h	Abort Command Limit (ACL)
259	07h	Asynchronous Event Request Limit (AERL)
260	12h	Firmware Updates (FRMW)
261	0Eh	Log Page Attributes (LPA)
262	3Fh	Error Log Page Entries (ELPE)
263	04h	Number of Power States Supported (NPSS)
264	01h	Admin Vendor-Specific Command Configuration (AVSCC)
265	01h	Autonomous Power State Transition Attributes (APSTA)
266-267	0170h	Warning Composite Temperature Threshold in Degrees Kelvin (WCTEMP)
268-269	017Fh	Critical Composite Temperature Threshold in Degrees Kelvin (CCTEMP)
270-271	0064h	Maximum Time for Firmware Activation (MTFA)
272-275	00004000h	Host Memory Buffer Preferred Size (HMPRE)
276-279	00004000h	Host Memory Buffer Minimum Size (HMMIN)
280-295	All 00h	Total NVM Capacity (TNVMCAP)
296-311	All 00h	Unallocated NVM Capacity (UNVMCAP)
312-315	00000000h	Replay Protected Memory Block Support (RPMBS)
316-317	000Ah	Extended Device Self-test Time (EDSTT)
318	01h	Device Self-test Options (DSTO)
319	04h	Firmware Update Granularity (FWUG)
320-321	0000h	Keep Alive Support (KAS)
322-323	0001h	Host Controlled Thermal Management Attributes (HCTMA)
324-325	0157h	Minimum Thermal Management Temperature (MNTMT)
326-327	017Fh	Maximum Thermal Management Temperature (MXTMT)
328-331	00000002h	Sanitize Capabilities (SANICAP)
332-511	All 00h	Reserved
512	66h	Submission Queue Entry Size (SQES)
513	44h	Completion Queue Entry Size (CQES)
514-515	0000h	Maximum Outstanding Commands (MAXCMD)
516-519	000000001h	Number of Namespaces (NN)
520-521	001Fh	Optional NVM Command Support (ONCS)
522-523	0000h	Fused Operation Support (FUSES)

Byte(s)	Default Value	Data Field Type Information
524	00h	Format NVM Attributes (FNA)
525	01h	Volatile Write Cache (VWC)
526–527	0000h	Atomic Write Unit Normal (AWUN)
528–529	0000h	Atomic Write Unit Power Fail (AWUPF)
530	00h	NVM Vendor-Specific Command Configuration (NVSCC)
531	00h	Reserved
532–533	0000h	Atomic Compare and Write Unit (ACWU)
534–535	0000h	Reserved
536–539	00000000h	Scatter Gather List Support (SGLC)
540–767	All 00h	Reserved
768–1023	All 00h	NVM Subsystem NVMe Qualified Name (SUBNQN)
1024–2047	All 00h	Reserved
2048–2079	XXXXh	Power State 0 Descriptor
2080–2111	XXXXh	Power State 1 Descriptor
2112–2143	XXXXh	Power State 2 Descriptor
2144–2175	XXXXh	Power State 3 Descriptor
2176–2207	XXXXh	Power State 4 Descriptor
2208–3071	All 00h	Power State 5 – 31 Descriptor (Not Applicable)
3072–4095	All 00h	Vendor Specific (VS)

9. Health Monitoring Functionality

The N-20m2 SSDs support Self-Monitoring, Analysis, and Reporting Technology (SMART) attributes. The SSD supports log information as defined in the NVMe specification. Supported information is shown in the log pages defined in Table 17:

Table 17: Supported Log Pages

Log Page	Log Identifier
Error Information	01h
SMART/Health Information	02h
Firwmare Slot Information	03h
Commands Supported and Effects	05h
Device Self-Test Log	06h
Telemetry Host-Initiated	07h
Telemetry Controller-Initiated	08h

See the following table for the 512-byte data structure of the SMART/Health Information log page:

Table 18: SMART/Health Information (Log Identifier 02h)

Byte(s)	Description
0	Critical warning: for the state of the controller
1-2	Composite Temperature: in degrees Kelvin
3	Available Spare: as a percentage of remaining spare capacity
4	Available Spare Threshold
5	Percentage Used: Estimate of the percentage of the NVM subsystem life left based on usage
6-31	Reserved
32-47	Data Units Read: Number of 512-byte sectors read by the host (in 1000 increments)
48-63	Data Units Written: Number of 512-byte sectors written by the host (in 1000 increments)
64-79	Host Read Commands: Number of Read commands completed by the controller
80-95	Host Write Commands: Number of Write commands completed by the controller
96-111	Controller Busy Time: Amount of time, in minutes, the controller was busy with I/O commands
112-127	Power Cycles: Number of power cycles that has occurred over the life of the drive
128-143	Power On Hours: Number of hours the device has been powered over the life of the drive (does not include the time the device is in low power state conditions)
144-159	Unsafe Shutdowns: Number of shutdowns that occurred without a shutdown notification
160-175	Media and Data Integrity Errors: Number of unrecoverable errors, including UECC, CRC checksum failures, and LBA mismatches, that occurred over the life of the drive
176-191	Number of Error Information Log Entries: Number of entries recorded in the Error Information log over the life of the drive
192-195	Warning Composite Temperature Time: Amount of time, in minutes, the controller was operational and the Composite Temperature was equal to or greater than the Warning Composite Temperature Threshold (WCTEMP) but less than the Critical Composite Temperature Threshold (CCTEMP)
196-199	Critical Composite Temperature Time: Amount of time, in minutes, the controller was operational and the Composite Temperature was equal to or greater than the Critical Composite Temperature Threshold (CCTEMP)
200-201	Temperature Sensor 1: Current temperature, in degrees Kelvin, reported by temperature sensor 1
202-203	Temperature Sensor 2: Current temperature, in degrees Kelvin, reported by temperature sensor 2
204-215	Not used
216-219	Thermal Management Temperature 1 Transition Count: number of times the controller transitioned to lower power active power states or performed vendor specific thermal management actions while minimizing the impact on performance
220-223	Thermal Management Temperature 2 Transition Count: number of times the controller transitioned to lower power active power states or performed vendor specific thermal management actions regardless of the impact on performance
224-227	Total Time For Thermal Management Temperature 1: number of seconds that the controller had transitioned to lower power active power states or performed vendor specific thermal management actions while minimizing the impact on performance
228-231	Total Time For Thermal Management Temperature 2: number of seconds that the controller had transitioned to lower power active power states or performed vendor specific thermal management actions regardless of the impact on performance
232-511	Reserved

The following data structure is applied to both Telemetry Host-Initiated log and Telemetry Controller-Initiated log:

Table 19: Telemetry Log (Log Identifier 07h & 08h)

Byte(s)	Description
Telemetry Header	
0	Log Identifier: This field shall be 07h or 08h
1-4	Reserved
5-7	IEEE OUI Identifier (IEEE):
4	Telemetry Host-Initiated Data Area 1 Last Block: This field shall be 0001h
10-381	Reserved
382	Telemetry Controller-Initiated Data Available
383	Telemetry Controller-Initiated Data Generation Number
384-511	Reserved
Telemetry Data Block 1	
528-529	Minimum Temperature, in degrees Kelvin
530-531	Current Temperature, in degrees Kelvin
530-531	Maximum Temperature, in degrees Kelvin
560-561	Number of valid spare blocks
562-563	Number of initial spare blocks
564-565	Run Time Bad Block Count
596-599	SLC Maximum Erase Count
604-607	SLC Average Erase Count
612-615	TLC Maximum Erase Count
620-623	TLC Average Erase Count
640	SLC Remaining Life Percentage Based On P/E
646	TLC Remaining Life Percentage Based On P/E

772-776	NVMe/PCIe Reset Count
804-807	PCIe Gen1 Link Count
808-811	PCIe Gen2 Link Count
812-815	PCIe Gen3 Link Count
816-823	PCIe ECRC Event Count
824-831	PCIe LCRC Event Count
873	PCIe Power On Link Speed
876	PCIe Current Link Speed
877	PCIe Current Link Width
878	PCIe ASPM Enabled
879	PCIe L1 Sub State Enabled
880-887	PS3 Resume Count
888-895	PS4 Resume Count
932-935	PCIe x1 Link Count
936-939	PCIe x2 Link Count
940-943	PCIe x3 Link Count
944-951	PCIe L1 Event Count

10. Part Number Decoder

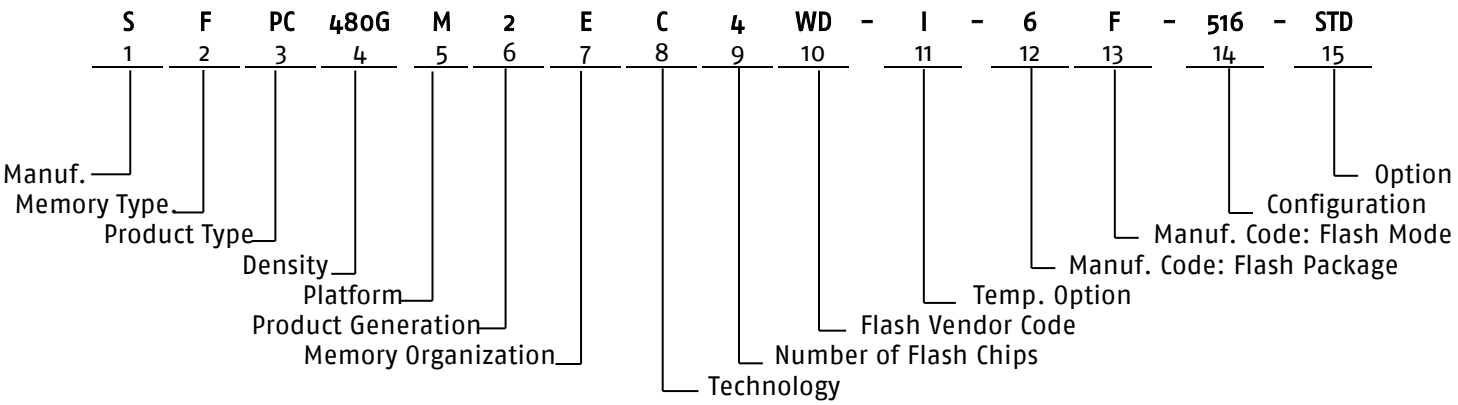

10.1 Manufacturer

Swissbit Code	S

10.2 Memory Type

Flash	F

10.3 Product Type

PCIe Interface	PC

10.4 Density

15 GBytes	015G
30 GBytes	030G
60 GBytes	060G
120 GBytes	120G
240 GBytes	240G
480 GBytes	480G

10.5 Platform

M.2 SSD	M

10.6 Product Generation

10.7 Memory Organization

Flash Products Embedded BGA	E

10.8 Technology

N-20m2 Series	C

10.9 Number of channels

1 Flash channel	1
2 Flash channel	2
4 Flash channel	4

10.10 Flash Code

Toshiba / Kioxia	T0
Western Digital	WD

10.11 Temperature Option

Industrial Temperature Range: -40 °C to 85 °C	I

10.12 Die Classification

3D TLC MONO (single die package)	5
3D TLC DDP (dual die package)	6

10.13 Pin Mode

Single nCE and Single R/nB	E
Dual nCE and Dual R/nB	F

10.14 Drive configuration XYZ

X = Dimension and Assembly

Dimension	Assembly	X
2230	Single-Sided	A
2242	Single-Sided	1
2280	Single-Sided	5

Y = Firmware Revision

FW Revision	Y
Standard	1

Z = Feature

Feature	Z
Standard	6

10.15 Option

Standard	STD

11. Marking Specification

11.1 Top View

Figure 5: N-20m2 top view



11.2 Print on the label

Figure 6: N-20m2 label details

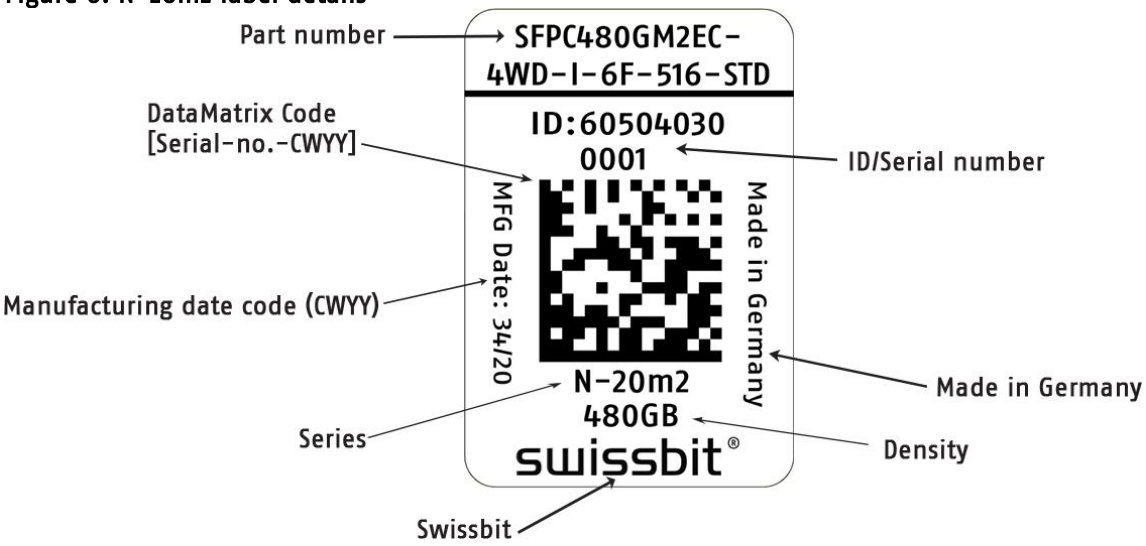

12. Revision History

Table 20: Document Revision History

Date	Revision	Description	Revision Details
07-April-2020	0.90	Preliminary draft	-
04-May-2020	0.91	Changes from Marco R. approved, added 2230/2242 variants	-
12-May-2020	0.92	Adjusted Register entries to EN-20, added several foot notes	-
12-May-2020	1.00	First release	Doc. req. no. 3688
17-July-2020	1.01	Added 480GB version, added sequential performance, completed endurance values, updated telemetry data	Doc. req. no. 3996
03-September-2020	1.02	Updated product illustrations	Doc. req. no. 4002
27-November-2020	1.03	Added 480GB 2-Lane product, updated performance and current values	Doc. req. no. 4237

Disclaimer:
No part of this document may be copied or reproduced in any form or by any means, or transferred to any third party, without the prior written consent of an authorized representative of Swissbit AG ("SWISSBIT"). The information in this document is subject to change without notice. SWISSBIT assumes no responsibility for any errors or omissions that may appear in this document and disclaims responsibility for any consequences resulting from the use of the information set forth herein. SWISSBIT makes no commitments to update or to keep current information contained in this document. The products listed in this document are not suitable for use in applications such as, but not limited to, aircraft control systems, aerospace equipment, submarine cables, nuclear reactor control systems and life support systems. Moreover, SWISSBIT does not recommend or approve the use of any of its products in life support devices or systems or in any application where failure could result in injury or death. If a customer wishes to use SWISSBIT products in applications not intended by SWISSBIT, said customer must contact an authorized SWISSBIT representative to determine SWISSBIT willingness to support a given application. The information set forth in this document does not convey any license under the copyrights, patent rights, trademarks or other intellectual property rights claimed and owned by SWISSBIT. The information set forth in this document is considered to be "Proprietary" and "Confidential" property owned by SWISSBIT.

ALL PRODUCTS SOLD BY SWISSBIT ARE COVERED BY THE PROVISIONS APPEARING IN SWISSBIT'S TERMS AND CONDITIONS OF SALE ONLY, INCLUDING THE LIMITATIONS OF LIABILITY, WARRANTY AND INFRINGEMENT PROVISIONS. SWISSBIT MAKES NO WARRANTIES OF ANY KIND, EXPRESS, STATUTORY, IMPLIED OR OTHERWISE, REGARDING INFORMATION SET FORTH HEREIN OR REGARDING THE FREEDOM OF THE DESCRIBED PRODUCTS FROM INTELLECTUAL PROPERTY INFRINGEMENT AND EXPRESSLY DISCLAIMS ANY SUCH WARRANTIES INCLUDING WITHOUT LIMITATION ANY EXPRESS, STATUTORY OR IMPLIED WARRANTIES OF MERCHANTABILITY OR FITNESS FOR A PARTICULAR PURPOSE.

© 2020 SWISSBIT AG All rights reserved.