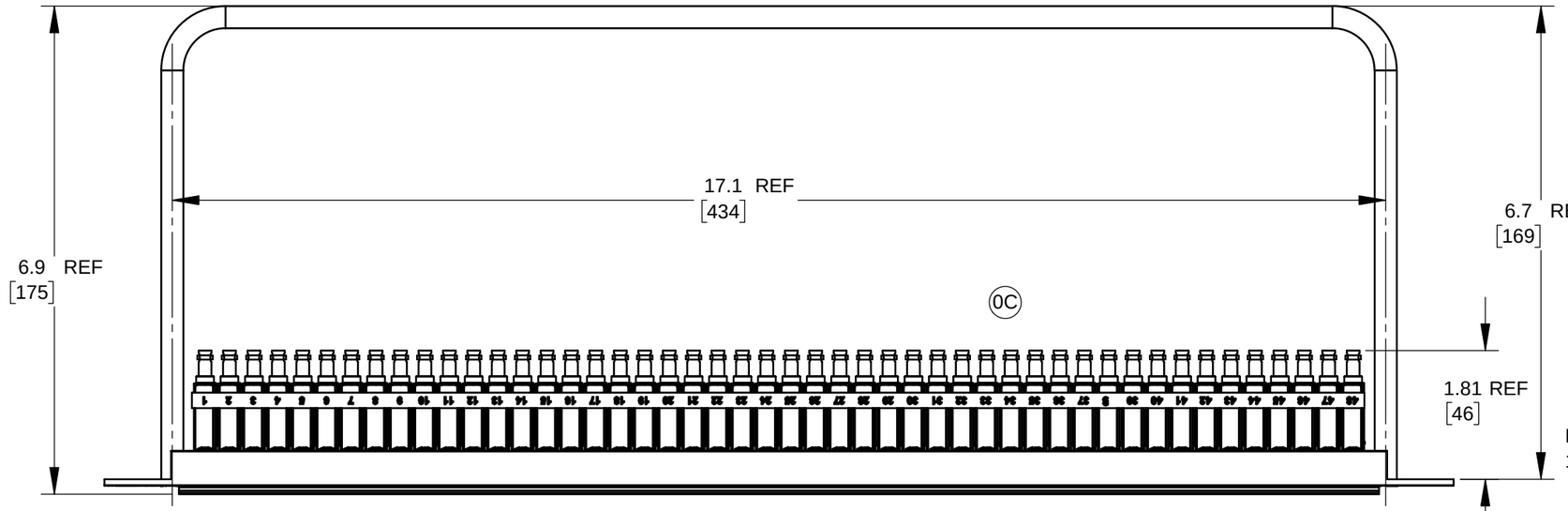

PRELIMINARY

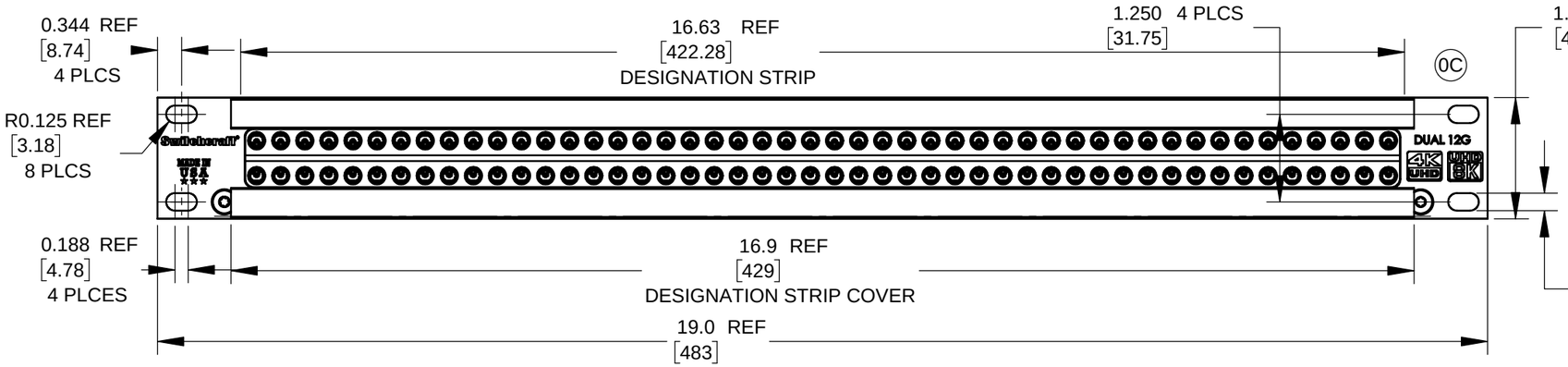

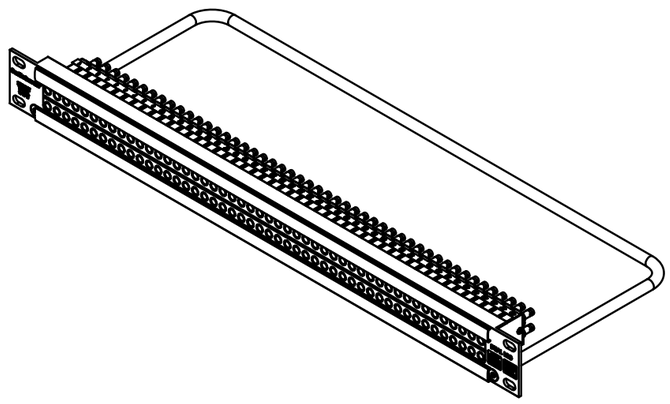

NOTES:

1. SPECIFICATIONS:
   - ELECTRICAL:
     - MEETS SMPTE 2082-1
     - CHARACTERISTIC IMPEDANCE: 75 OHMS
     - CONTACT RESISTANCE: LESS THAN 50 MILLIOHMS
   - INTERFACE:
     - MATING PLUG: 0.175 OUTSIDE DIAMETER
     - CENTER CONDUCTOR: ACCEPTS 0.029 PIN DIAMETER
   - MECHANICAL:
     - VIBRATION: PER MIL - STD 202, METHOD 201
     - INSERTION FORCE: 9 LBS MAX.
     - WITHDRAWAL FORCE: 2 LBS MIN.
     - LIFE CYCLE: 20,000 TYP.
     - TEMPERATURE
       - OPERATING: -40 °C TO 65 °C
       - STORAGE: -40 °C TO 65 °C
     - THERMAL SHOCK: PER MIL-STD- 202, METHOD 107
     - MOISTURE AND HUMIDITY: PER MIL-STD- 202, METHOD 106
     - SALT SPRAY: PER MIL-STD- 202, METHOD 101
2. USE UHDMBNC STYLE 12 GHz CABLE CONNECTORS AND VMMPUHD PATCHCORDS OR VMMLPUHD LOOPING PLUGS TO MEET SMPTE 2082-1.
3. THIS PRODUCT IS RoHS COMPLIANT.

CUSTOMER DRAWING

PART NUMBER	DESCRIPTION	REVISION
MMVPMB48K175T	NORMAL-TERMINATED	0C
MMVPMB48K1NNT	NON-NORMAL-NON-TERMINATED	0C

REV	ECO NUMBER	DATE	BY	APVD
0C	CORRECT VIEW & LASER ETCH	12-13-19	SRC	SRC
0B	UPDATE	11-22-19	SRC	SRC

REVISIONS

☆ STAR SYMBOL DENOTES CRITICAL DIMENSION

UNLESS OTHERWISE SPECIFIED

1. ALL DIMENSIONS IN INCHES
   - TWO PLACE DECIMALS ±0.01
   - THREE PLACE DECIMALS ±0.005
   - ANGLES ±1°
   - ALL DIA. CONCENTRIC WITHIN 0.005 T.I.R.
2. FEATURES ON THE SAME CENTERLINE MUST BE ALIGNED WITHIN ±0.002
3. REMOVE ALL BURRS

DO NOT SCALE DRAWING

THIS DRAWING DESCRIBES A DESIGN CONSIDERED PROPRIETARY IN NATURE, DEVELOPED AND MANUFACTURED BY SWITCHCRAFT INC. AND IS RELEASED ON A CONFIDENTIAL BASIS FOR IDENTIFICATION PURPOSES ONLY.

SIZE	WIDTH	MULT	LBS/M	TEMPER

FINISH
SPEC No.

MATERIAL *
SPEC No. *

FIRST USED ON

SCALE 1:2

DATE DRAWN	BY	CHKD	APVD
5-6-19	SRC	5-6-19 SRC	* *

Switchcraft®

SHEET 1 OF 1

NAME MICRO-MICROBNC-REAR PATCHBAYS

PART No. MMVPMB481K_SERIES

REV 0C

SolidWorks CAD File B

ROUTING 146 112