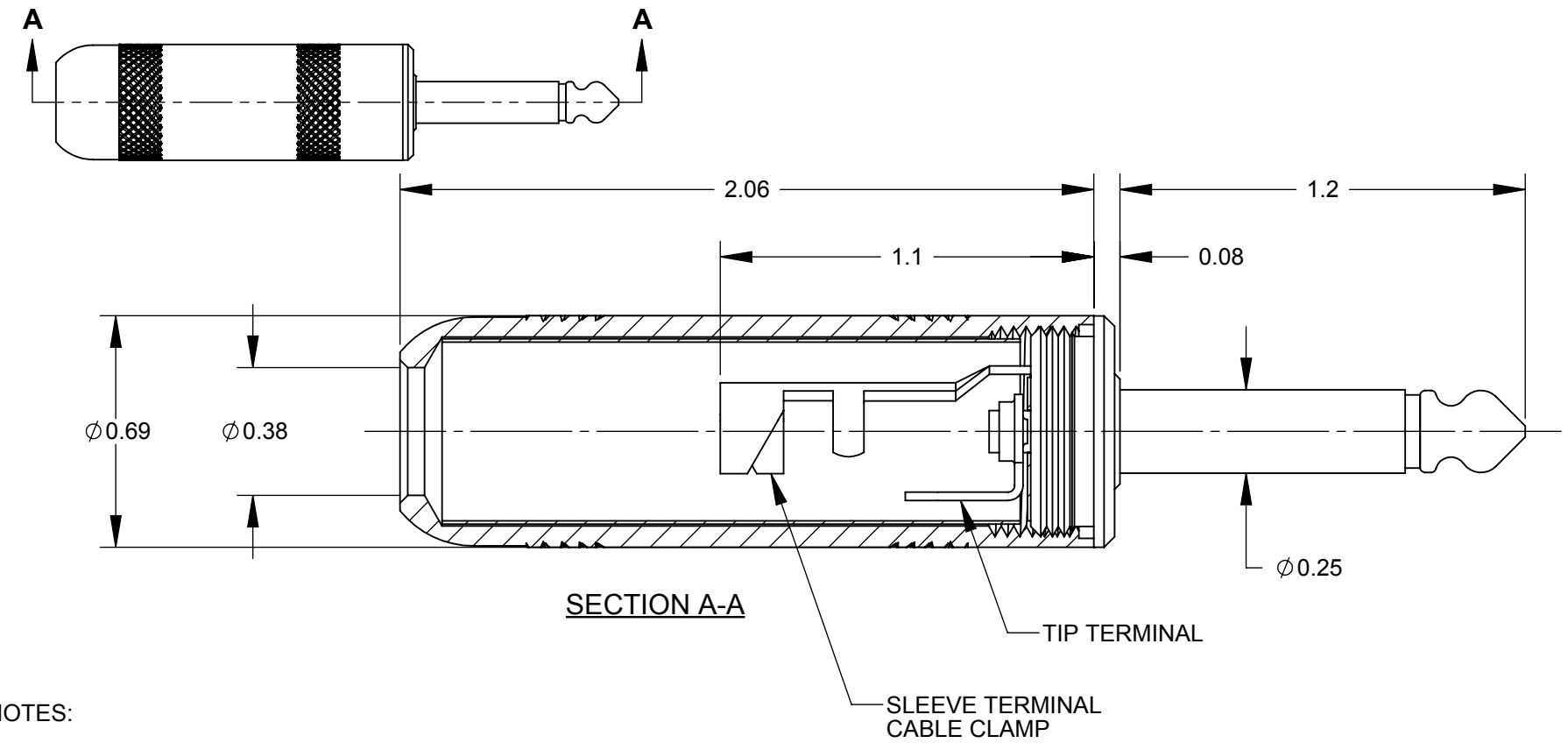

NOTES:

1. MATERIALS
   BODY, HANDLE & TIP ROD - BRASS, NICKEL PLATED
   TERMINALS - BRASS, TIN PLATED
   INSULATORS - PHENOLIC
   HANDLE INSULATOR - MYLAR

CUSTOMER DRAWING

REV	ECO NUMBER	DATE	BY	APVD
D	23647	8-3-05	JL	EB

REVISIONS

UNLESS OTHERWISE SPECIFIED

1. ALL DIMENSIONS IN INCHES
   - TWO PLACE DECIMALS ±0.02
   - THREE PLACE DECIMALS ±0.005

DO NOT SCALE DRAWING

THIS DRAWING DESCRIBES A DESIGN CONSIDERED PROPRIETARY IN NATURE, DEVELOPED AND MANUFACTURED BY SWITCHCRAFT INC. AND IS RELEASED ON A CONFIDENTIAL BASIS FOR IDENTIFICATION PURPOSES ONLY.

SIZE	WIDTH	MULT	LBS/M	TEMPER
*	*	*	*	*

FINISH *
SPEC No. *

MATERIAL *
SPEC No. *

FIRST USED ON *

SCALE 1:1

DATE DRAWN	BY	CHKD	APVD
8-3-05	JL	EB 8-3-05	EB 8-3-05

Switchcraft®

SHEET 1 OF 1

NAME 2 CONDUCTOR PHONE PLUG

PART No. 184

REV D

SolidWorks CAD File

A