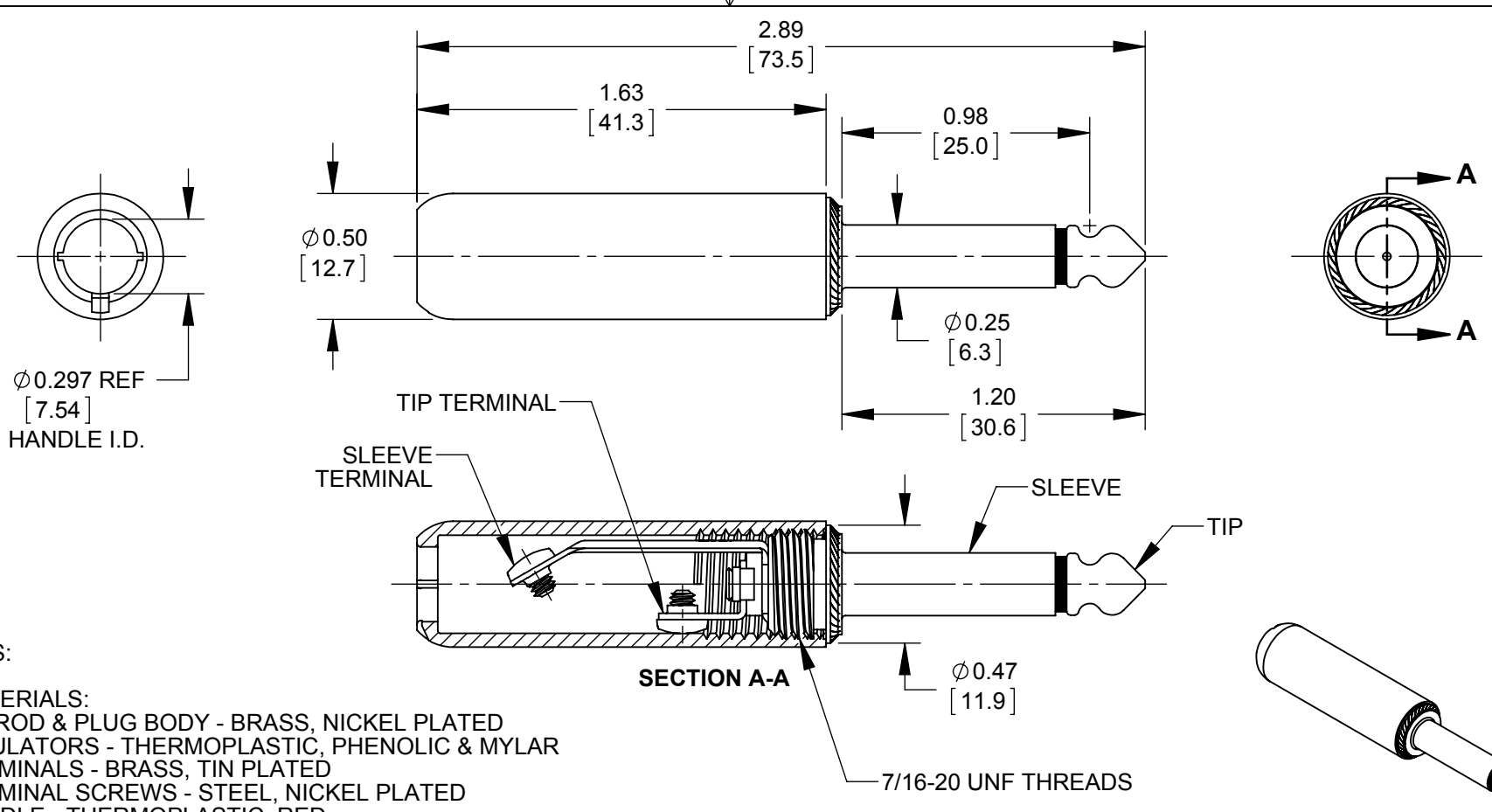


NOTES:

1. MATERIALS:
   TIP ROD & PLUG BODY - BRASS, NICKEL PLATED
   INSULATORS - THERMOPLASTIC, PHENOLIC & MYLAR
   TERMINALS - BRASS, TIN PLATED
   TERMINAL SCREWS - STEEL, NICKEL PLATED
   HANDLE - THERMOPLASTIC, RED

2. HANDLE & SCREWS SHIPPED ASSEMBLED.

3. THIS PRODUCT IS RoHS COMPLIANT.

**CUSTOMER DRAWING**

| REV | ECO NUMBER | DATE | BY | APVD |
|---|---|---|---|---|
| A | 27792 | 10-14-16 | TO | TJK |

REVISIONS

UNLESS OTHERWISE SPECIFIED

1. ALL DIMENSIONS IN INCHES [mm]
   - TWO PLACE DECIMALS ±0.02 [0.5]
   - THREE PLACE DECIMALS ±0.005 [0.13]

DO NOT SCALE DRAWING

THIS DRAWING DESCRIBES A DESIGN CONSIDERED PROPRIETARY IN NATURE, DEVELOPED AND MANUFACTURED BY SWITCHCRAFT INC. AND IS RELEASED ON A CONFIDENTIAL BASIS FOR IDENTIFICATION PURPOSES ONLY.

| SIZE | WIDTH | MULT | LBS/M | TEMPER |
|---|---|---|---|---|
| | | | | |

FINISH
SPEC No.

MATERIAL
SPEC No.

FIRST USED ON

SCALE 1.5:1

| DATE DRAWN | BY | CHKD | APVD |
|---|---|---|---|
| 11-14-16 | TO | TO 11-14-16 | TJK 11-18-16 |

Switchcraft®

SHEET 1 OF 1

NAME 2 CONDUCTOR COMMERCIAL PHONE PLUG, RoHS

PART No. 245X

REV A

SolidWorks CAD File A