PART NO. 250

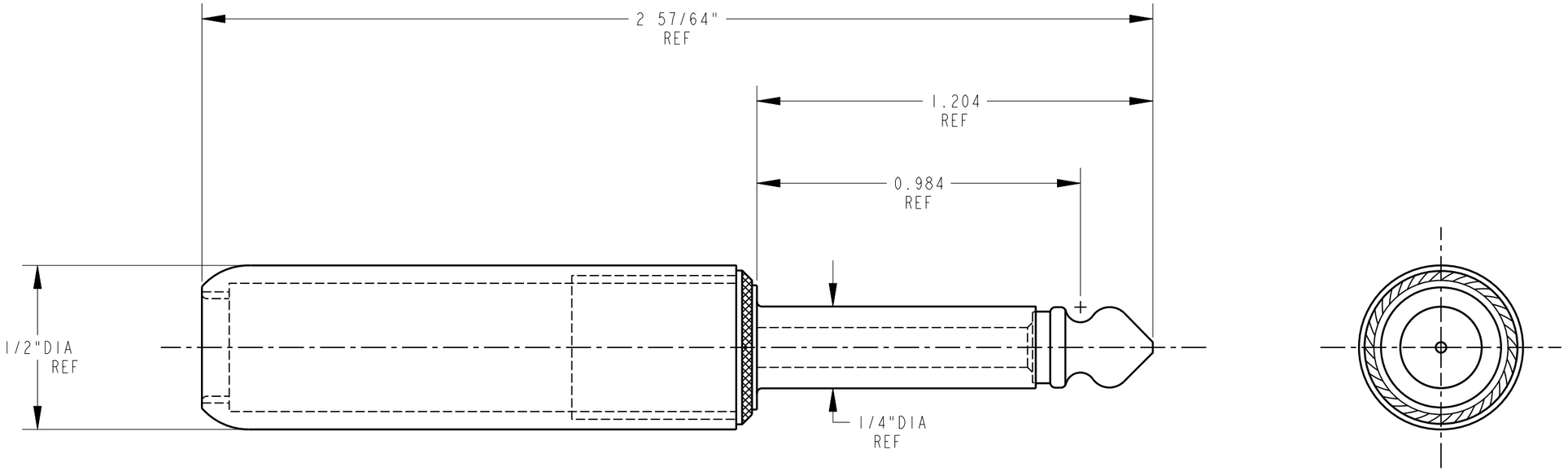

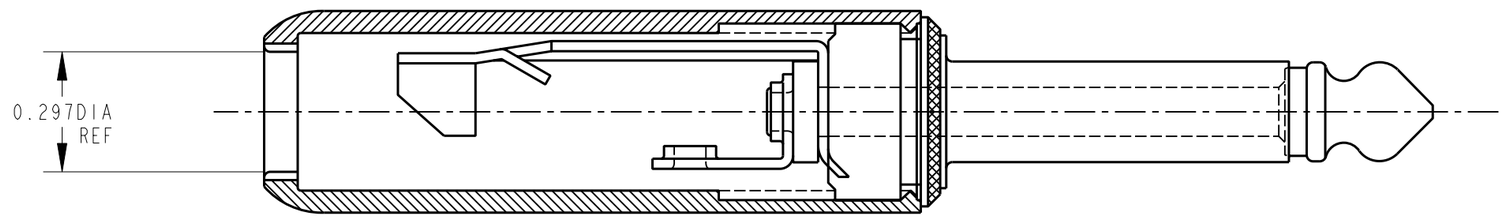

MATERIALS:

TIP, SLEEVE - BRASS, NICKEL PLATED

INSULATORS - PHENOLIC, MYLAR

CABLE CLAMP - BRASS, ELECTROTINNED

TIP TERMINAL - BRASS, ELECTROTINNED

HANDLE - NYLON, TYPE 66

CUSTOMER DRAWING

CAD/CAM DWG. NO.
250_CD

SHEET 1 OF 1

ISSUE	CHANGE NO.	DATE	BY	APP'D
C	ECO #19690	3-15-95	RC	GHJ
A	FIRST DRAWN	9-13-93	ES	TAO

REVISIONS

☆ STAR SYMBOL DENOTES CRITICAL DIMENSION, SEE S/C ENGINEERING STANDARD ES-0001

UNLESS OTHERWISE SPECIFIED

1. ALL DIMENSIONS IN INCHES
   TWO PLACE DECIMAL ±.01
   THREE PLACE DECIMAL ±.005
   FRACTIONAL DIMENSIONS ±1/64
   ANGLES ±1/2°
   ALL DIA'S CONCENTRIC WITHIN .005 T.I.R.
2. REMOVE ALL BURRS
3. MAKE NO DIMENSIONAL ALLOWANCES FOR APPLIED FINISHES, I.E., PLATING, PAINTING, ETC.
4. HOLES ON THE SAME CENTERLINE MUST BE ALIGNED WITHIN ±.002

DO NOT SCALE DRAWING

THIS DRAWING DESCRIBES A DESIGN CONSIDERED PROPRIETARY IN NATURE, DEVELOPED AND MANUFACTURED BY SWITCHCRAFT INC. AND IS RELEASED ON A CONFIDENTIAL BASIS FOR IDENTIFICATION PURPOSE ONLY.

SIZE	WIDTH	MULT	LBS./M	TEMPER
.	.	.	.	.

FINISH .
SPEC. NO. .

MATERIAL .
SPEC. NO. .

FIRST USED ON .

SCALE 1 = 0.5

DATE DRAWN	BY	CHK'D	APP'D
9-13-93	ES	ES 11-9-93	TAO 11-9-93

Switchcraft®

NAME
2 CONDUCTOR
PHONE PLUG

PART NO. 250

ISSUE C

B ROUTING