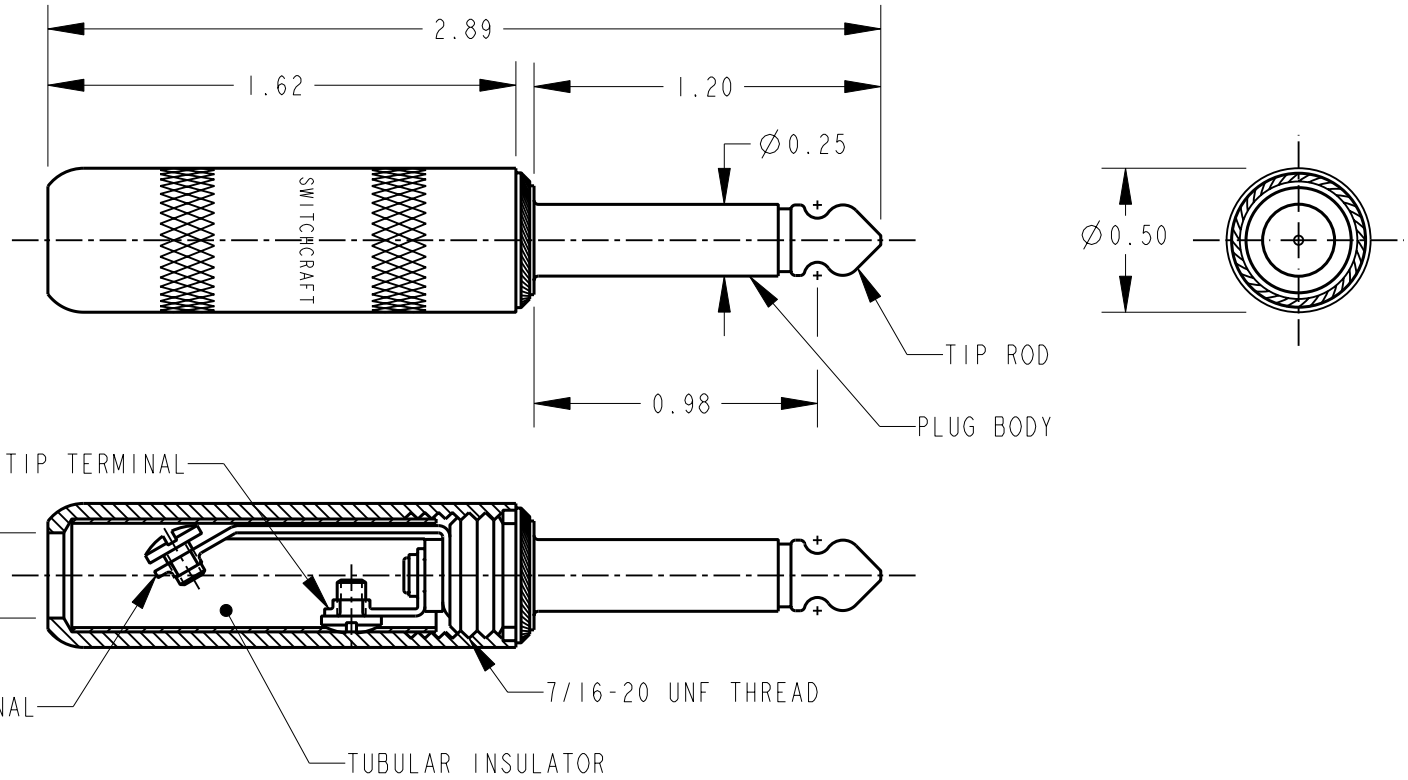

NOTE:

1. MATERIALS:
   HANDLE - COPPER ALLOY, NICKEL PLATED
   PLUG BODY - COPPER ALLOY, NICKEL PLATED
   TIP ROD - COPPER ALLOY, NICKEL PLATED
   INSULATORS - MYLAR, PHENOLIC & THERMOPLASTIC
   SCREW TERMINALS - COPPER ALLOY, TIN PLATED
   SCREWS - STEEL, NICKEL PLATED

CUSTOMER DRAWING

REV	ECO NUMBER	DATE	BY	APVD
D	20627	12/26/12	TO	TJK

REVISIONS

☆ STAR SYMBOL DENOTES CRITICAL DIMENSION

UNLESS OTHERWISE SPECIFIED

1. ALL DIMENSIONS IN INCHES
   -TWO PLACE DECIMALS ±0.01
   -THREE PLACE DECIMALS ±0.005
   -ANGLES ±1°
   -ALL DIA. CONCENTRIC WITHIN 0.005 T.I.R.
2. FEATURES ON THE SAME CENTERLINE MUST BE ALIGNED WITHIN ±0.002
3. REMOVE ALL BURRS

DO NOT SCALE DRAWING

THIS DRAWING DESCRIBES A DESIGN CONSIDERED PROPRIETARY IN NATURE, DEVELOPED AND MANUFACTURED BY SWITCHCRAFT INC. AND IS RELEASED ON A CONFIDENTIAL BASIS FOR IDENTIFICATION PURPOSES ONLY.

SIZE	WIDTH	MULT	LBS/M	TEMPER
.	.	.	.	.

FINISH .
SPEC No. .

MATERIAL .
SPEC No. .

FIRST USED ON .

SCALE 1.5 = 1

DATE DRAWN	BY	CHKD	APVD
26-Dec-12	TO	TO 12-27-12	TJK 12-27-12

Switchcraft®

SHEET 1 OF 1

NAME 2 CONDUCTOR LITTEL PLUG

PART No. 270

REV D

Pro/Engineer CAD File

A