PART NO. 280

ITEM	DESCRIPTION	REQ'D
3	TUBING	1
2	HANDLE	1
1	PLUG ASSEMBLY	1

STOCK LIST

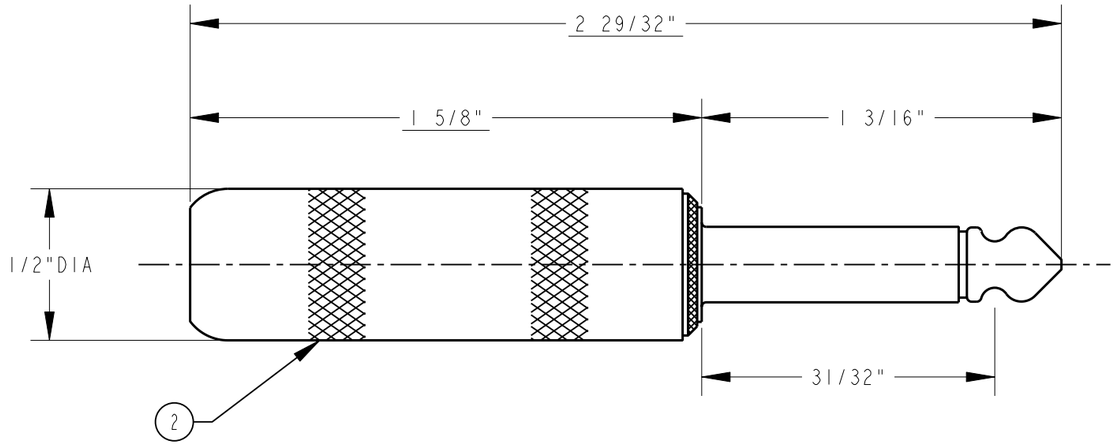

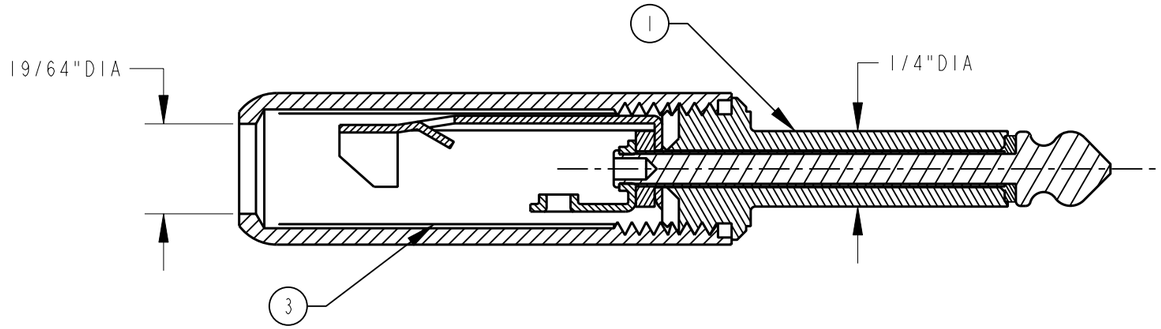

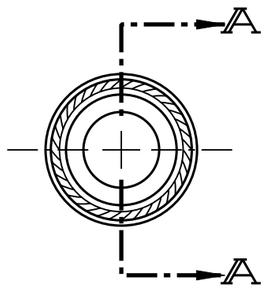

SECTION A-A

MATERIALS:

1. TIP AND BODY-BRASS-NICKEL PLATE.
2. TERMINALS-BRASS-ELECTRO TIN PLATED
3. INSULATORS-PHENOLIC
4. HANDLE-BRASS-NICKEL PLATE
5. TORQUE = HOLDING THE PLUG SLEEVE RIGID, A TWISTING FORCE OF 1 POUND-INCH SHALL BE APPLIED TO THE TIP, IT SHOULD NOT ROTATE OR BECOME LOOSE.

ISSUE	CHANGE NO.	DATE	BY	APP'D
D	ECO #19700	3-28-95	RC	GHJ
B	CAD REDRAW WAS REV.A ECO #16155	3-20-92	ES	GHJ

REVISIONS

☆ STAR SYMBOL DENOTES CRITICAL DIMENSION, SEE S/C ENGINEERING STANDARD ES-0001

UNLESS OTHERWISE SPECIFIED

1. ALL DIMENSIONS IN INCHES
2. DECIMAL DIMENSIONS ±.005
3. FRACTIONAL DIMENSIONS ±1/64
4. ANGLES ±1/2°
5. ALL DIA'S CONCENTRIC WITHIN .005 T.I.R.
6. REMOVE ALL BURRS
7. MAKE NO DIMENSIONAL ALLOWANCES FOR APPLIED FINISHES, I.E., PLATING, PAINTING, ETC.
8. HOLES ON THE SAME CENTERLINE MUST BE ALIGNED WITHIN ±.002

DO NOT SCALE DRAWING

THIS DRAWING DESCRIBES A DESIGN CONSIDERED PROPRIETARY IN NATURE, DEVELOPED AND MANUFACTURED BY SWITCHCRAFT INC. AND IS RELEASED ON A CONFIDENTIAL BASIS FOR IDENTIFICATION PURPOSE ONLY.

SIZE	WIDTH	MULT	LBS./M	TEMPER

FINISH
SPEC. NO.

MATERIAL
SPEC. NO.

FIRST USED ON

SCALE 1 = 0.5

DATE DRAWN	BY	CHK'D	APP'D
6-17-64	JRT	RB 7-15-64	EB 1-28-88

Switchcraft®

NAME 2 CONDUCTOR PHONE PLUG

PART NO. 280

ISSUE D

CUSTOMER DRAWING

CAD/CAM DWG. NO. 280_CD

SHEET 1 OF 1

Pro/Engineer CAD File

B ROUTING 107 112