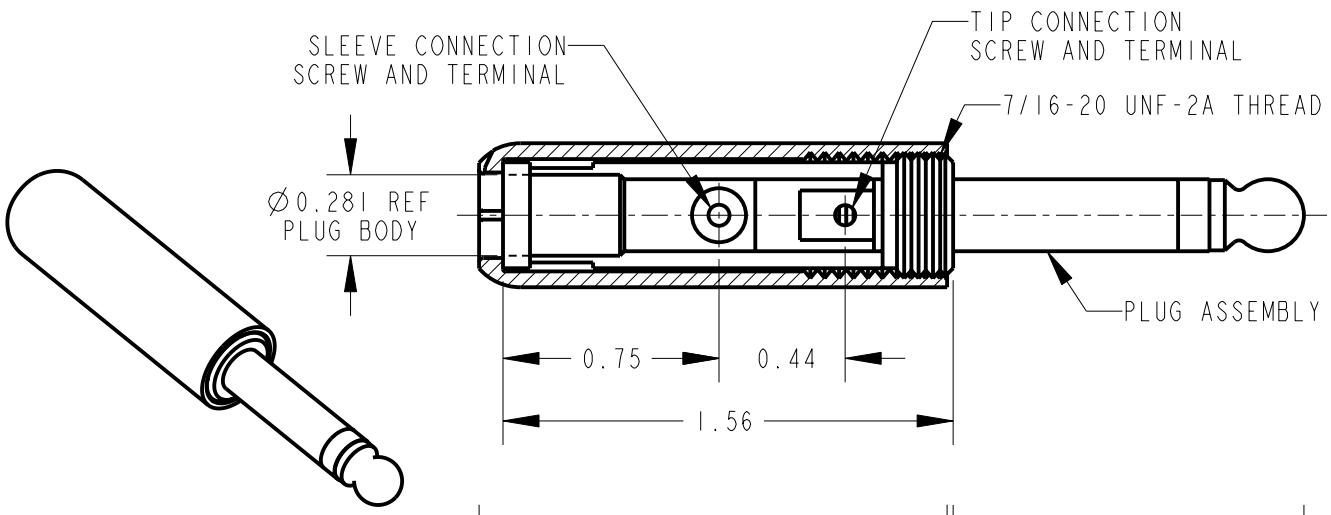

SCALE 1:1

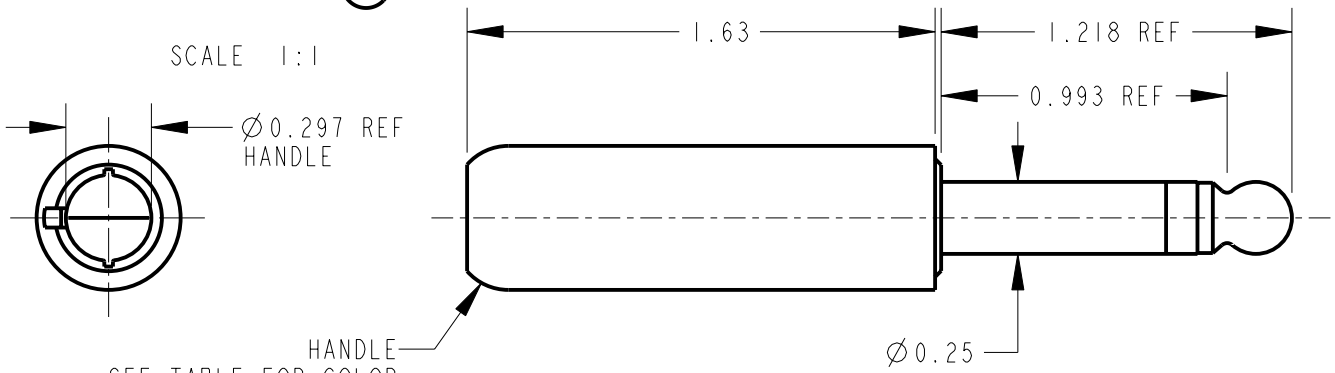

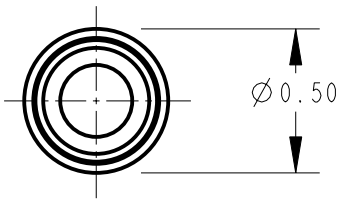

NOTES:

1. CABLE U-CLAMP, TERMINALS AND SCREWS ARE PACKED AND SHIPPED UNASSEMBLED AS K165X KIT.

2. MATERIALS:
   PLUG BODY AND TIP ROD - BRASS
   INSULATION - THERMOPLASTIC, BLACK
   HANDLE - THERMOPLASTIC
   SCREWS - BRASS
   TERMINALS - BRASS, TIN PLATED
   U-CLAMP - STEEL, TIN PLATED

3. THESE PRODUCTS ARE RoHS COMPLIANT.

PART NUMBER	HANDLE COLOR
440X	BLACK
445X	RED

CUSTOMER DRAWING

REV	ECO NUMBER	DATE	BY	APVD
A	26765	4-19-11	TO	TJK

REVISIONS

☆ STAR SYMBOL DENOTES CRITICAL DIMENSION

UNLESS OTHERWISE SPECIFIED

1. ALL DIMENSIONS IN INCHES
   -TWO PLACE DECIMALS ±0.01
   -THREE PLACE DECIMALS ±0.005
   -ANGLES ±1°
   -ALL DIA. CONCENTRIC WITHIN 0.005 T.I.R.
2. FEATURES ON THE SAME CENTERLINE MUST BE ALIGNED WITHIN ±0.002
3. REMOVE ALL BURRS

DO NOT SCALE DRAWING

THIS DRAWING DESCRIBES A DESIGN CONSIDERED PROPRIETARY IN NATURE, DEVELOPED AND MANUFACTURED BY SWITCHCRAFT INC. AND IS RELEASED ON A CONFIDENTIAL BASIS FOR IDENTIFICATION PURPOSES ONLY.

SIZE	WIDTH	MULT	LBS/M	TEMPER
.	.	.	.	.

FINISH .
SPEC No. .

MATERIAL .
SPEC No. .

FIRST USED ON .

SCALE 3:2

DATE DRAWN	BY	CHKD	APVD
7-Mar-14	TO	TO 3-7-14	TJK 3-7-14

Switchcraft®

SHEET | OF |

NAME
2 CONDUCTOR PLUG Ø0.25

PART No.
440X_445X

REV
A

Pro/Engineer CAD File

A