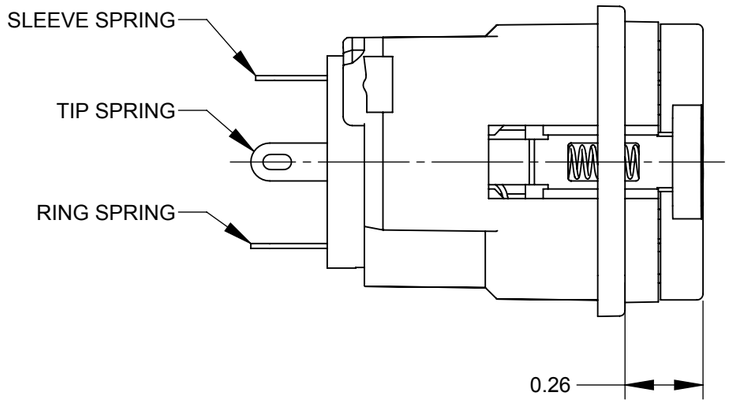

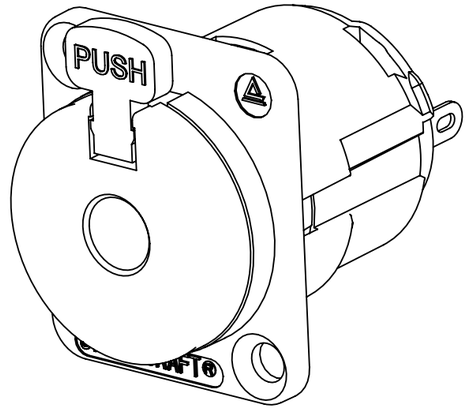

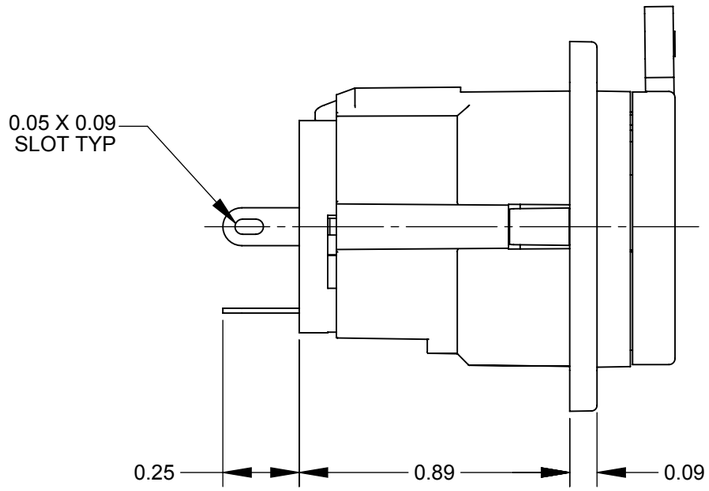

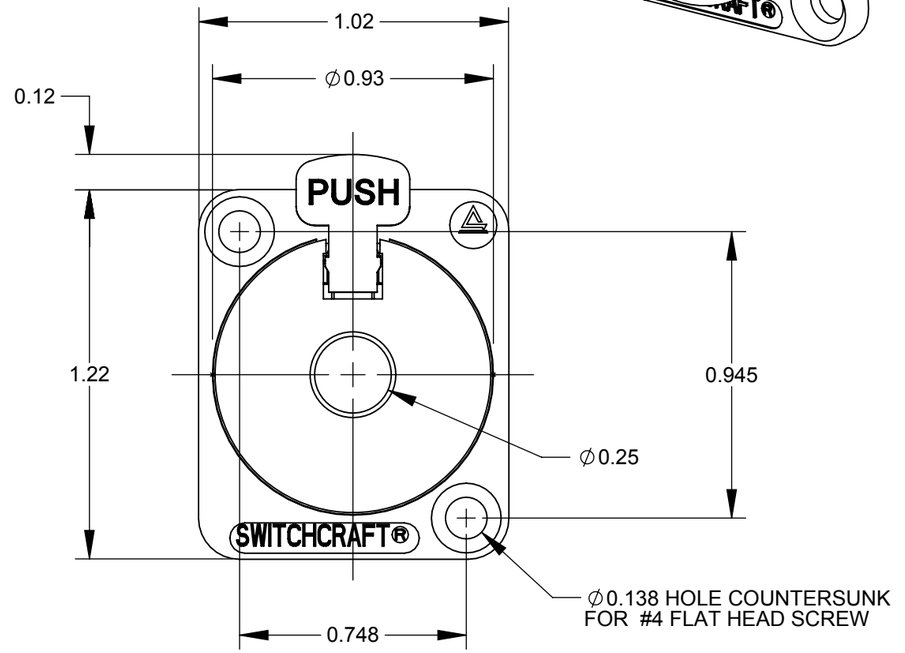

NOTES:

1. MATES WITH SWITCHCRAFT P/N 267 PLUG
2. MOUNTING HOLE: ∅0.938
3. MATERIALS:
   HOUSING ZINC ALLOY, SATIN NICKEL PLATED
   PLUG HOUSING - THERMOPLASTIC, BLACK
   INTERNAL LATCH - THERMOPLASTIC, RED
   LATCH RELEASE - ZINC ALLOY, NICKEL PLATED
   TERMINALS / SPRINGS - NICKEL SILVER, ELECTRO-TIN PLATED
   TORSION & RETURN SPRINGS - MUSIC WIRE, TINNED
4. THIS PRODUCT IS RoHS COMPLIANT.

CUSTOMER DRAWING

REV	ECO NUMBER	DATE	BY	APVD
B	18079	2/13/12	TJK	TJK

REVISIONS

UNLESS OTHERWISE SPECIFIED

1. ALL DIMENSIONS IN INCHES
   - TWO PLACE DECIMALS ±0.02
   - THREE PLACE DECIMALS ±0.005

DO NOT SCALE DRAWING

THIS DRAWING DESCRIBES A DESIGN CONSIDERED PROPRIETARY IN NATURE, DEVELOPED AND MANUFACTURED BY SWITCHCRAFT INC. AND IS RELEASED ON A CONFIDENTIAL BASIS FOR IDENTIFICATION PURPOSES ONLY.

SIZE	WIDTH	MULT	LBS/M	TEMPER
*	*	*	*	*

FINISH *
SPEC No. *
MATERIAL *
SPEC No. *

FIRST USED ON *
SCALE 2:1

DATE DRAWN	BY	CHKD	APVD
2/13/12	TJK	TJK 2/13/12	TJK 2/13/12

Switchcraft®

SHEET 1 OF 1

NAME "E" SERIES - ∅0.25 3 CONDUCTOR LOCKING JACK, RoHS

PART No. E112BL

REV B

SolidWorks CAD File B