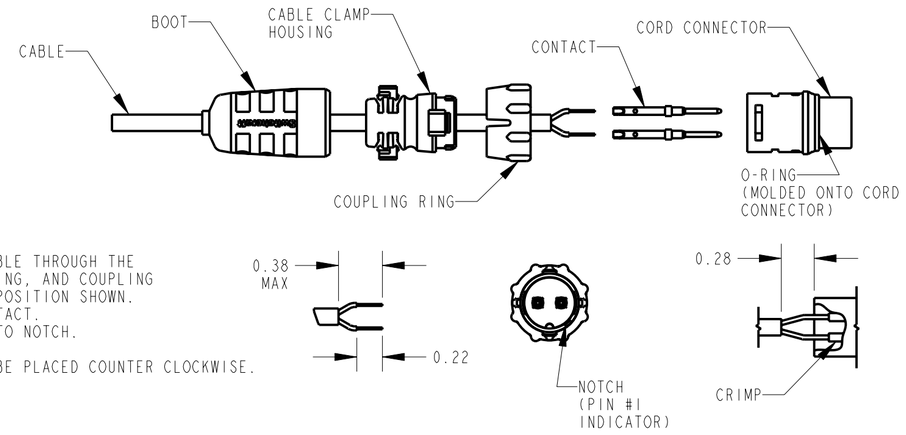

STEP 1
STRIP CABLE AS SHOWN.
FEED THE END OF THE CABLE THROUGH THE BOOT, CABLE CLAMP HOUSING, AND COUPLING RING IN THE ORDER AND POSITION SHOWN.
CRIMP CONDUCTOR TO CONTACT.
CONTACT #1 TO BE NEXT TO NOTCH.

**REMAINING CONTACTS TO BE PLACED COUNTER CLOCKWISE.

STEP 2
ALIGN COUPLING RING'S TABS WITH CORD CONNECTOR'S SIDE NOTCHES AND PUSH THE COUPLING RING ONTO CORD CONNECTOR.

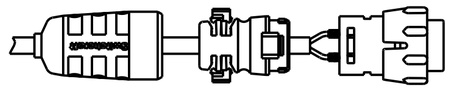

STEP 3
PUSH THE CABLE CLAMP HOUSING FORWARD UNTIL IT LOCKS INTO THE CONNECTOR BODY AND SNAP THE TWO CLAMPS INTO IT'S COMPARTMENTS.

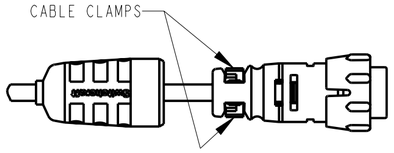

STEP 4
PUSH THE BOOT ALL THE WAY FORWARD TO SEAT TIGHTLY ONTO THE CABLE CLAMP HOUSING.



SPECIFICATIONS

MECHANICAL:
SHOCK: MIL-STD 202 METHOD 213B, COND. K.
VIBRATION: MIL-STD 202 METHOD 201
LIFE: 300 INSERTION/WITHDRAWAL CYCLES (MINIMUM)

ELECTRICAL
DIELECTRIC WITHSTANDING VOLTAGE: 1,000 VAC
INSULATION RESISTANCE: 100 MEGOHMS (MIN) AT 77°F
CONTACT RESISTANCE: 5.0 MILLOHMS MAX.
CURRENT RATING: 7.5 AMPS (#20 CONTACT)
6.5 AMPS (7 & 8 PIN #20 CONTACT)
13.0 AMPS (#16 CONTACT)

ENVIRONMENTAL
TEMPERATURE LIMITS: -40°C TO +65°C (NON-OPERATING)
MOISTURE RESISTANCE: MIL-STD 202 METHOD 106F
INSULATION RESISTANCE: MIL-STD 202 METHOD 302, COND. B
THERMAL SHOCK: MIL-STD 202 METHOD 107G
SALT SPRAY: MIL-STD 202 METHOD 101D, COND. B
WATER TIGHTNESS TEST: U.S. COAST GUARD CFR 46 PART 110.20

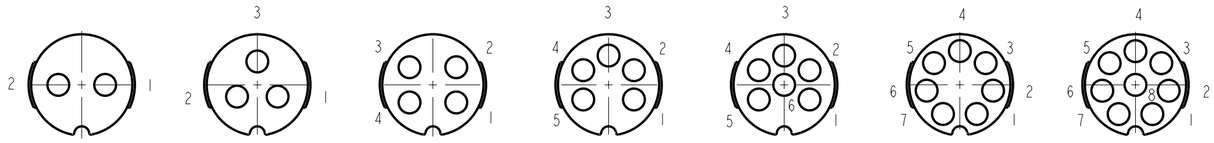

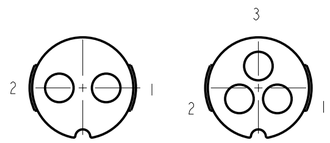

CONTACT ARRANGEMENTS

SHOWN ARE REAR VIEWS OF FEMALE CORD CONNECTORS

MATERIALS:
CORD CONNECTOR SHELL, CONTACT LOCKING DISK, COUPLING RING AND CABLE CLAMP ASSEMBLY:
THERMOPLASTIC POLYMER GLASS FIBER, FLAME RETARDANT

REAR BOOT AND CONNECTOR SHELL INTERIOR:
THERMOPLASTIC RUBBER

CONTACTS: COPPER BASE ALLOY GOLD-PLATED OVER NICKEL UNDERPLATE

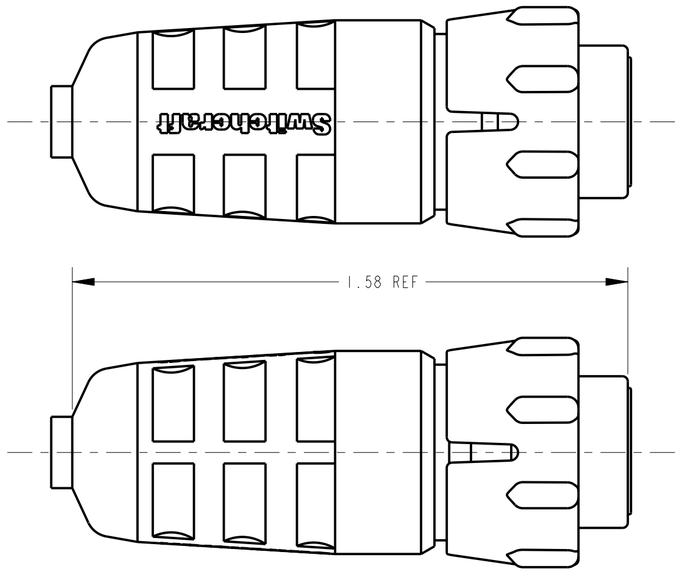

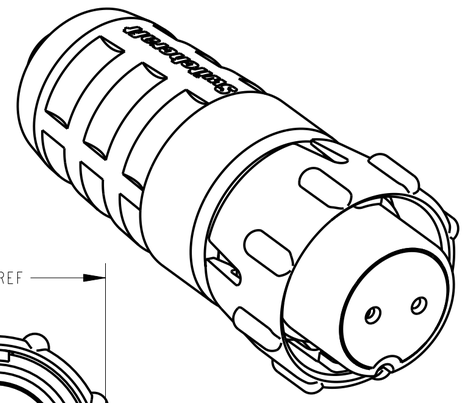

CUSTOMER DRAWING

STANDARD[1] ← → OPTIONAL[2]

E N 3 C F

SERIES

CONECTOR TYPE
C - CORD

NUMBER OF CONTACTS
2,3,4,5,6,7,8

GENDER
F - FEMALE

CONTACT SIZE
16 - #16
AVAILABLE IN
2 AND 3 PIN ONLY

[1]STANDARD CONFIGURATION
- CONTACT SIZE: #20
- CONTACT STYLE: SOLDER CUP
- CONTACT PLATING: GOLD
- CONTACTS FACTORY INSTALLED
- PACKAGED IN BULK

[2]OPTIONAL CONFIGURATION
- LEAVE BLANK FOR STANDARD CONFIGURATION

REV	ECO NUMBER	DATE	BY	APVD
G	22232	6-7-98	SG	RB
F	21282	2-5-97	SG	RB
E	20897	2-5-97	SG	RB

REVISIONS

☆ STAR SYMBOL DENOTES CRITICAL DIMENSION

UNLESS OTHERWISE SPECIFIED
1. ALL DIMENSIONS IN INCHES
-TWO PLACE DECIMALS ±0.01
-THREE PLACE DECIMALS ±0.005
-ANGLES ±1°
-ALL DIA. CONCENTRIC WITHIN 0.005 T.I.R.
2. FEATURES ON THE SAME CENTERLINE MUST BE ALIGNED WITHIN ±0.002
3. REMOVE ALL BURRS

DO NOT SCALE DRAWING

THIS DRAWING DESCRIBES A DESIGN CONSIDERED PROPRIETARY IN NATURE, DEVELOPED AND MANUFACTURED BY SWITCHCRAFT INC. AND IS RELEASED ON A CONFIDENTIAL BASIS FOR IDENTIFICATION PURPOSES ONLY.

SIZE	WIDTH	MULT	LBS/M	TEMPER

FINISH
SPEC No.

MATERIAL
SPEC No.

FIRST USED ON

SCALE 3:1

DATE DRAWN	BY	CHKD	APVD
3-4-94	SG	SG 2-6-95	FL 2-6-95

Switchcraft®

SHEET 1 OF 1

NAME
FEMALE CORD CONNECTOR

PART No.
EN3C_F

REV
G

Pro/Engineer CAD File