SWITCHCRAFT PANEL CONNECTOR ASSEMBLY INSTRUCTIONS

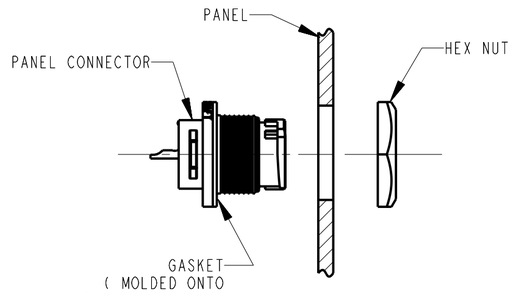

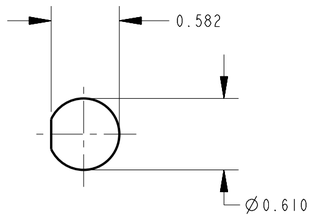

RECOMMENDED
PANEL CUT-OUT

SPECIFICATIONS

MECHANICAL:
- SHOCK: MIL-STD 202 METHOD 213B, COND. K.
- VIBRATION: MIL-STD 202 METHOD 201
- LIFE: 300 INSERTION/WITHDRAWAL CYCLES (MINIMUM)

ELECTRICAL
- DIELECTRIC WITHSTANDING VOLTAGE: 1,000 VAC
- INSULATION RESISTANCE: 100 MEGOHMS (MIN) AT 77°F
- CONTACT RESISTANCE: 5.0 MILLOHMS MAX.
- CURRENT RATING: 7.5 AMPS (#20 CONTACT)
  6.5 AMPS (7 & 8 PIN #20 CONTACT)
  13.0 AMPS (#16 CONTACT)

ENVIRONMENTAL
- TEMPERATURE LIMITS: -40°C TO +65°C (NON-OPERATING)
- MOISTURE RESISTANCE: MIL-STD 202 METHOD 106F
- INSULATION RESISTANCE: MIL-STD 202 METHOD 302, COND. B
- THERMAL SHOCK: MIL-STD 202 METHOD 107G
- SALT SPRAY: MIL-STD 202 METHOD 101D, COND. B
- WATER TIGHTNESS TEST: U.S. COAST GUARD CFR 46 PART 110.20

NOTES:

1. HEX NUT TORQUE:
   8 TO 10 INCH-LBS. OF TORQUE
   (MUST NOT EXCEED 10 INCH-LBS.)
2. HEX NUT SHIPPED UNASSEMBLED.

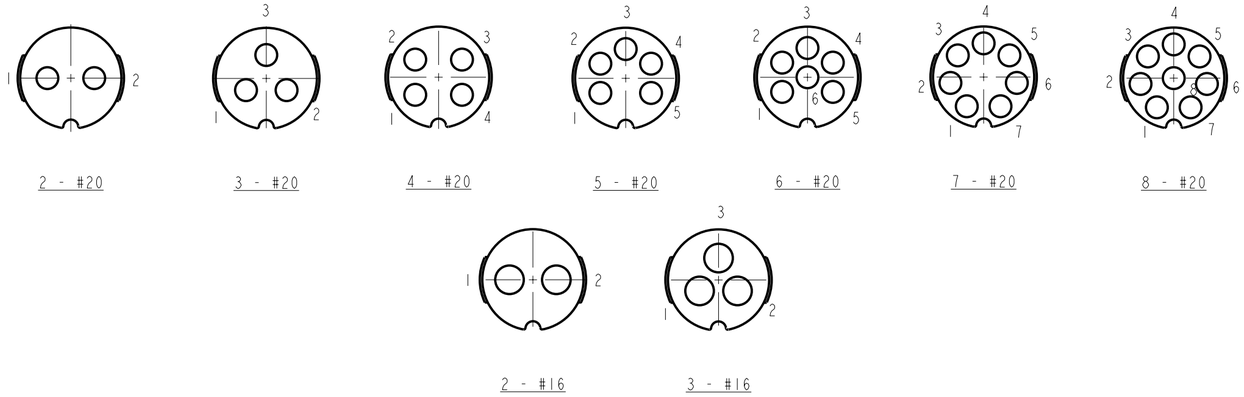

CONTACT ARRANGEMENT

SHOWN ARE REAR VIEWS OF
MALE PANEL CONNECTORS

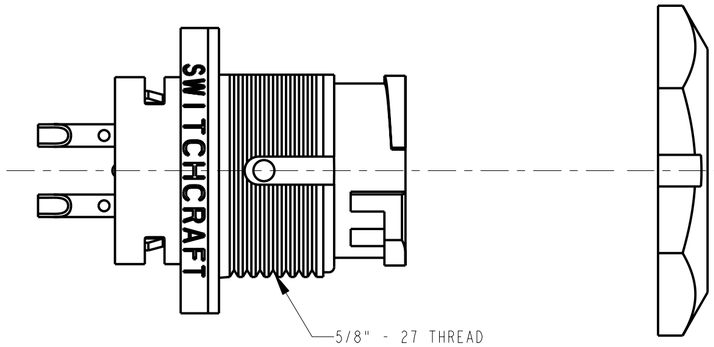

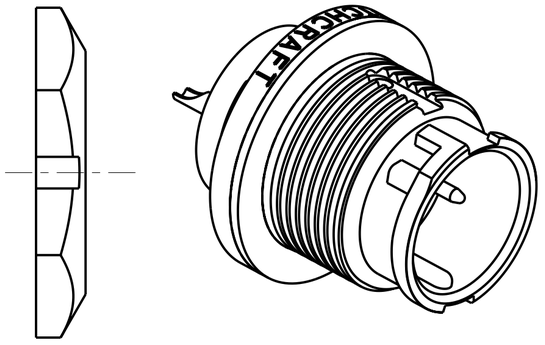

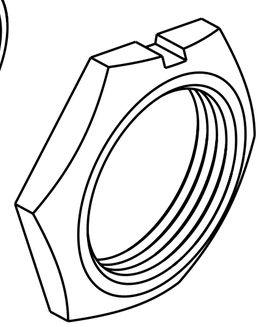

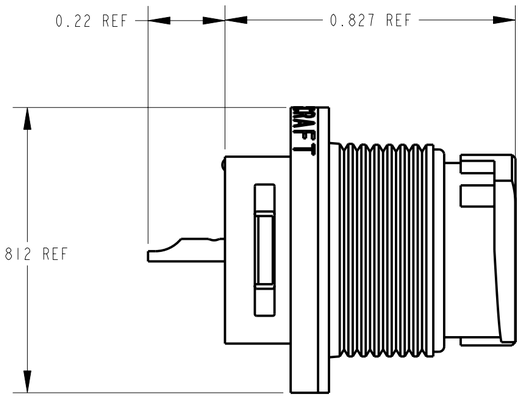

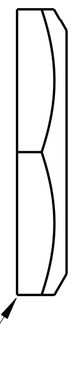

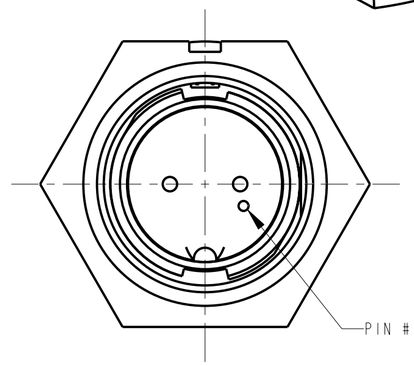

MATERIALS:
- PANEL CONNECTOR SHELL, CONTACT LOCKING DISC: THERMOPLASTIC POLYMER GLASS FIBER, FLAME RETARDANT
- CONNECTOR SHELL INTERIOR: THERMOPLASTIC RUBBER
- CONTACTS: COPPER BASE ALLOY GOLD-PLATED OVER NICKEL UNDERPLATE
- HEX NUT: THERMOPLASTIC

STANDARD[1] ← → OPTIONAL[2]

E N 3 P M

- SERIES
- CONNECTOR TYPE: P - PANEL
- NUMBER OF CONTACTS: 2,3,4,5,6,7,8
- GENDER: M - MALE
- CONTACT SIZE: 16 - #16 AVAILABLE IN 2 AND 3 PIN ONLY

[1]STANDARD CONFIGURATION
- CONTACT SIZE: #20
- CONTACT STYLE: SOLDER CUP
- CONTACT PLATING: GOLD
- CONTACTS FACTORY INSTALLED
- PACKAGED IN BULK

[2]OPTIONAL CONFIGURATION
- LEAVE BLANK FOR STANDARD CONFIGURATION

REV	ECO NUMBER	DATE	BY	APVD
G	24661	3-4-04	JL	EB
F	23595	2-6-01	JL	DK
E	22232	4-30--98	SG	RB
D	ECO #21461	12-2-96	MM	FL
C	ECO #19815	10-9-95	RC	KS
B	FIRST DRAWN	1-28-95	SG	FL

REVISIONS

☆ STAR SYMBOL DENOTES CRITICAL DIMENSION

UNLESS OTHERWISE SPECIFIED
1. ALL DIMENSIONS IN INCHES
   -TWO PLACE DECIMALS ±0.01
   -THREE PLACE DECIMALS ±0.005
   -ANGLES ±1°
   -ALL DIA. CONCENTRIC WITHIN 0.005 T.I.R.
2. FEATURES ON THE SAME CENTERLINE MUST BE ALIGNED WITHIN ±0.002
3. REMOVE ALL BURRS

DO NOT SCALE DRAWING

THIS DRAWING DESCRIBES A DESIGN CONSIDERED PROPRIETARY IN NATURE, DEVELOPED AND MANUFACTURED BY SWITCHCRAFT INC. AND IS RELEASED ON A CONFIDENTIAL BASIS FOR IDENTIFICATION PURPOSES ONLY.

SIZE	WIDTH	MULT	LBS/M	TEMPER

FINISH
SPEC No.

MATERIAL
SPEC No.

FIRST USED ON

SCALE 3:1

DATE DRAWN	BY	CHKD	APVD
1-28-95	SG	SG 2-27-95	FL 2-27-95

Switchcraft®

SHEET 1 OF 1

NAME MALE PANEL CONNECTORS EN3P_M SERIES

PART No. EN3P_M

REV G

CUSTOMER DRAWING

Pro/Engineer CAD File