S- 260 290

PART NO.	HANDLE
S-260	BLK. PLASTIC
S-290	BRASS NI. PL.

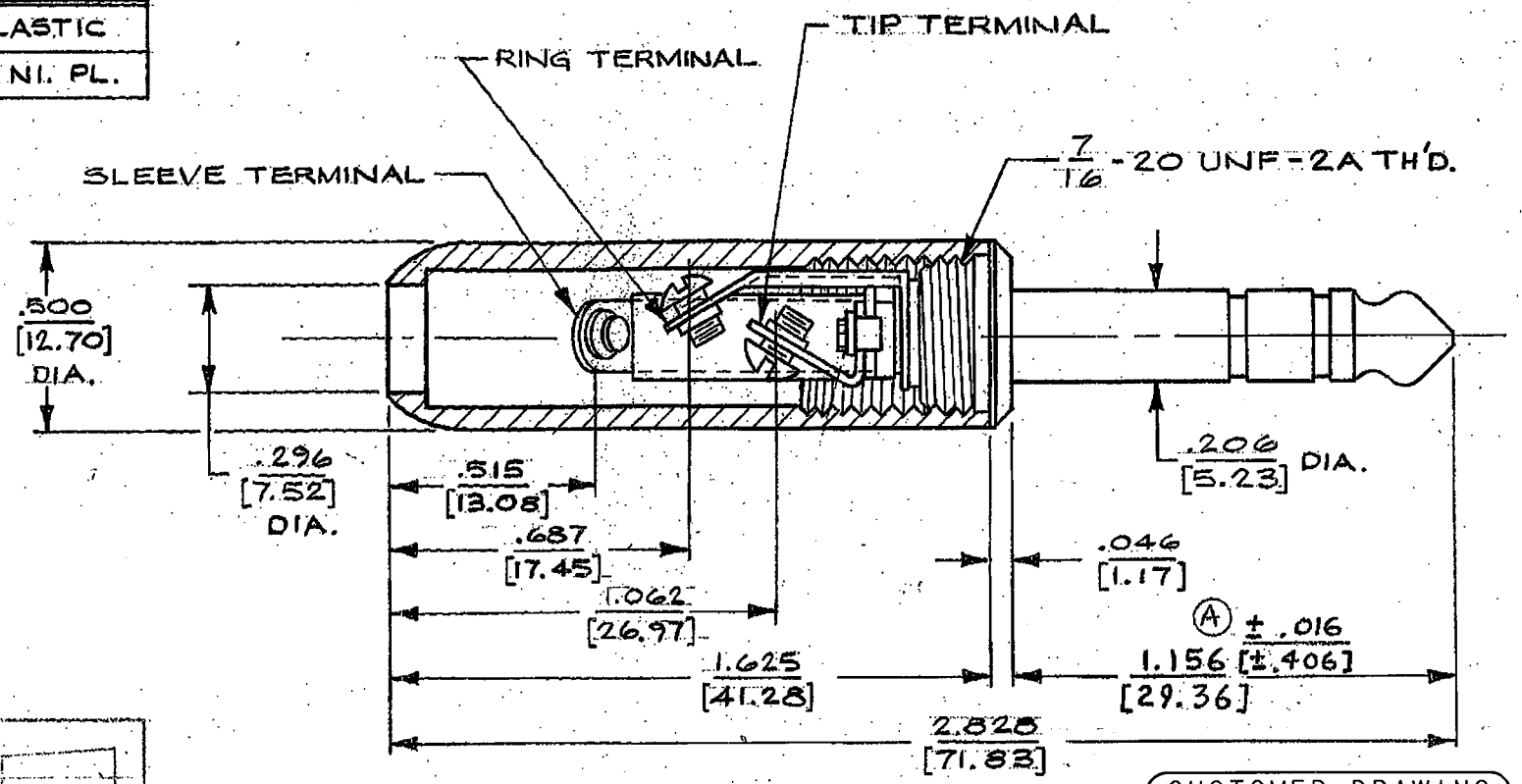

CUSTOMER DRAWING

INCH [MM] THIRD ANGLE PROJECTION

☆ STAR SYMBOL DENOTES CRITICAL DIMENSION, SEE S/C ENGINEERING STANDARD ES-0001.

SIZE	WIDTH	MULT.	LBS. PER M	TEMPER

THIS DRAWING DESCRIBES A DESIGN CONSIDERED PROPRIETARY IN NATURE, DEVELOPED AND MANUFACTURED BY SWITCHCRAFT, INC., AND IS RELEASED ON A CONFIDENTIAL BASIS FOR IDENTIFICATION PURPOSE ONLY.

UNLESS OTHERWISE SPECIFIED:

1 - DECIMAL DIMENSIONS ± .005 [0.13]
2 - FRACTIONAL DIMENSIONS ± 1/64
3 - ANGLES ± 1/2° [0.38]
4 - ALL DIA'S CONCENTRIC WITHIN .005 T.I.R.
5 - ALL DIMENSIONS IN INCHES [0.13]
6 - FOR THREADS USE UNIFIED PLUG AND RING GAGES ONLY.
7 - REMOVE ALL BURRS.
8 - PART TO BE FABRICATED AS SPECIFIED. MAKE NO DIMENSIONAL ALLOWANCES FOR APPLIED FINISHES, I.E., PLATING, PAINTING, ETC.
9 - HOLES ON SAME CENTERLINE MUST BE ALIGNED WITHIN ± .002 [0.05]

DO NOT SCALE DRAWING

DRAWN BY KB.	DATE 14 JUNE 78	FINISH
CHECKED BY JN	DATE 28 JUNE 78	PER FINISH SPEC. NO.
APPROVED BY	DATE 6-29-78	MATERIAL
SCALE		PER MAT. SPEC. NO.
FIRST USED ON		SWITCHCRAFT

NAME 3 CONDUCTOR LITTEL PLUG .206 [5.23] DIA.

PART NO. S- 260 290

ISSUE C

SHEET 1 OF 1

PATTON

ISS	SYM	REVISION	BY	DATE
2		REDRAWN & ADDED METRIC DIMS.	KB	14 JUNE 78
3	A	± .016 TOL. ADDED ECO # 12419	A.Q.	10-25-84
4	1	ADDED NOTE ECO # 13146	DAT	10/5/87
5		CHANGED NOTE 1 ECO # 13889	DAT	10/5/87
A		ECO # 15724	EB	11-30-90
B		ECO# 19646	TD	6-26-12
C		20627	TD	16-26-12

ROUTING (12) (16) (46)