

2 CONDUCTOR SINGLE OPEN CIRCUIT

SN49A11

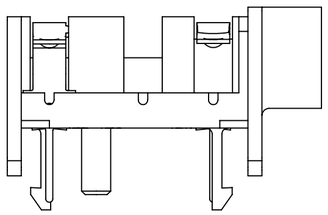

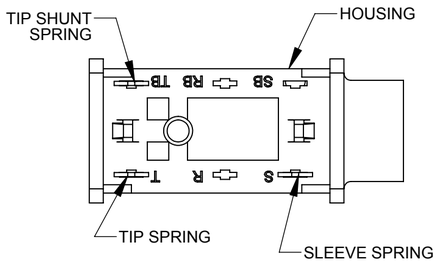

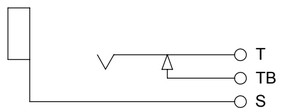

2 CONDUCTOR SINGLE CLOSED CIRCUIT

SN49A12A

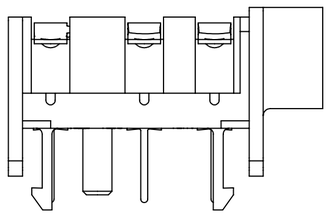

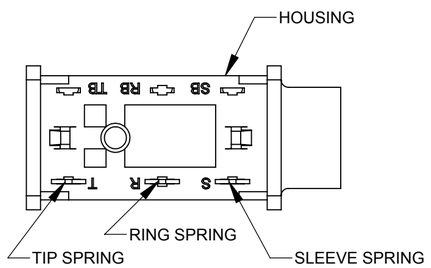

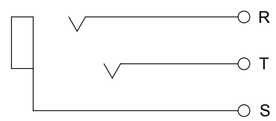

3 CONDUCTOR DOUBLE OPEN CIRCUIT

SN49A12B

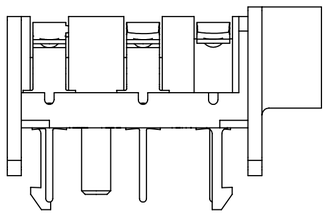

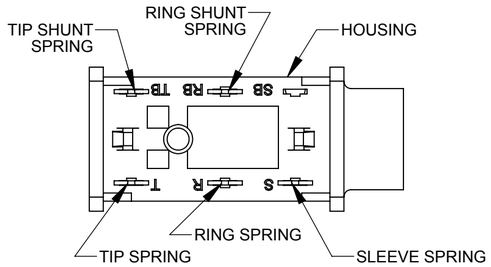

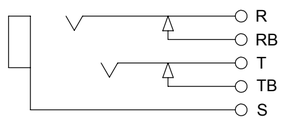

3 CONDUCTOR DOUBLE CLOSED CIRCUIT

SN49A14B

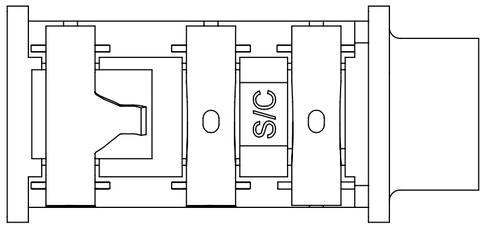

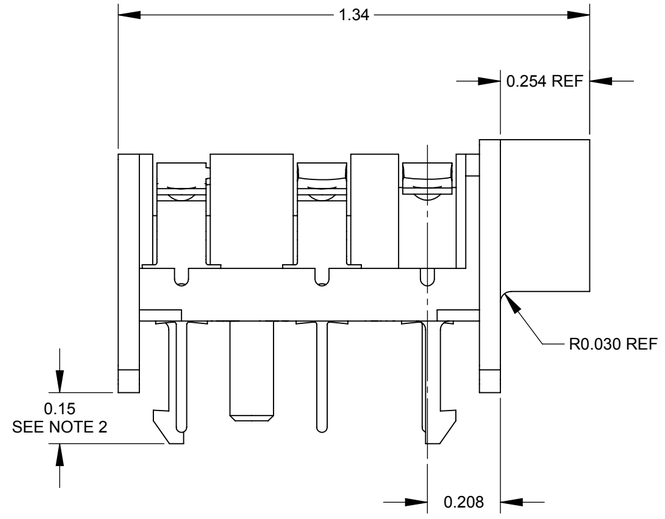

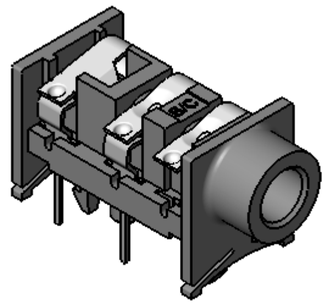

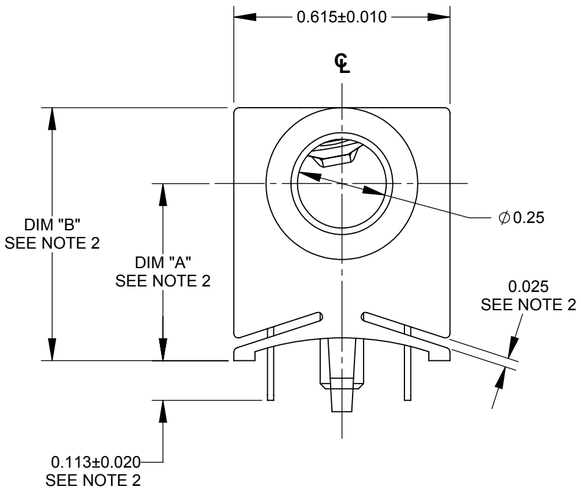

SN49A14B SHOWN

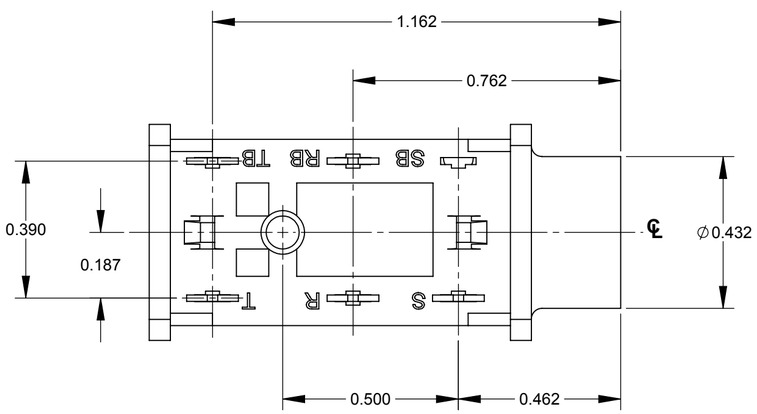

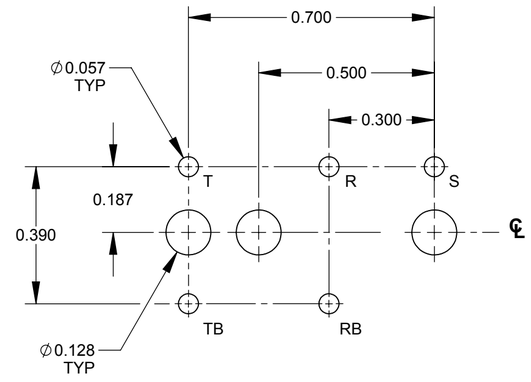

RECOMMENDED PC BOARD LAYOUT COMPONENT SIDE

NOTES:

1. MAY BE USED WITH PC BOARD THICKNESSES RANGING FROM 0.054 - 0.070.
2. THESE DIMENSIONS VARY DEPENDING ON PCB THICKNESS. DIMENSIONS SHOWN ARE FREE STATE AS SHIPPED.
3. MATERIAL SPECIFICATIONS:
   HOUSING - THERMOPLASTIC, BLACK.
   SPRINGS - SPECIAL COPPER ALLOY, TINNED.
4. THESE PRODUCTS ARE RoHS COMPLIANT.

PART NUMBER	DIM "A"		DIM "B"	
	FREE STATE	WITH 0.062 THICK PCB	FREE STATE	WITH 0.062 THICK PCB
SN49A11	0.504	0.492	0.720	0.708
SN49A12A	0.504	0.492	0.720	0.708
SN49A12B	0.504	0.492	0.720	0.708
SN49A14B	0.504	0.492	0.720	0.708

REV	ECO NUMBER	DATE	BY	APVD
C	CAD REDRAW ECO #27409	11/17/14	PC	TJK

REVISIONS

UNLESS OTHERWISE SPECIFIED

1. ALL DIMENSIONS IN INCHES
   - TWO PLACE DECIMALS ±0.02
   - THREE PLACE DECIMALS ±0.005

DO NOT SCALE DRAWING

THIS DRAWING DESCRIBES A DESIGN CONSIDERED PROPRIETARY IN NATURE, DEVELOPED AND MANUFACTURED BY SWITCHCRAFT INC. AND IS RELEASED ON A CONFIDENTIAL BASIS FOR IDENTIFICATION PURPOSES ONLY.

SIZE	WIDTH	MULT	LBS/M	TEMPER

FINISH
SPEC No.

MATERIAL
SPEC No.

FIRST USED ON

SCALE 3:1

DATE DRAWN	BY	CHKD	APVD
08/17/84	VL	VL 08/17/84	KR 08/17/84

Switchcraft®

SHEET 1 OF 1

NAME PHONE JACK INSULATED BUSHING

PART No. SN49A SERIES

REV C

CUSTOMER DRAWING

SolidWorks CAD File