TA _ F _ _ _ _ X

- **TA** — TINI QG CORD PLUG
- **_** — NUMBER OF CONTACTS
  - **3** - 3 CONTACTS
  - **4** - 4 CONTACTS
  - **5** - 5 CONTACTS
  - **6** - 6 CONTACTS
  - **7** - 7 CONTACTS
  - **8** - 8 CONTACTS
- **F** — FEMALE
- **_** — FLEX RELIEF SIZE (CABLE RANGE)
  - **BLANK** - STANDARD SIZE (∅0.065 - ∅0.130) [∅1.65 - ∅3.30] (F)
  - **L** - LARGE CABLE HOLE (NO FLEX RELIEF) SEE "TA*FLX DETAIL"
    3 PIN - 6 PIN HANDLE (∅0.130 - ∅0.190) [∅3.30 - ∅4.83] (F)
    7 PIN - 8 PIN HANDLE (∅0.130 - ∅0.250) [∅3.30 - ∅6.35]
- **_** — HOUSING FINISH
  - **BLANK** - NICKEL (STANDARD)
  - **B** - BLACK CHROME
- **_** — CONTACT PLATING
  - **BLANK** - SILVER (STANDARD)
  - **AU** - GOLD
- **_** — HANDLE FINISH
  - **BLANK** - BLACK PLASTIC (STANDARD)
  - **E** - NICKEL PLATED PLASTIC
  - **W** - WHITE PLASTIC
- **X** — RoHS COMPLIANT

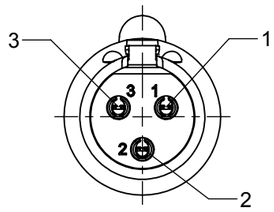

3 - PIN

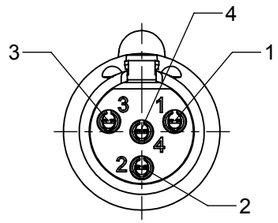

4 - PIN

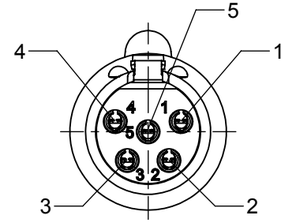

5 - PIN

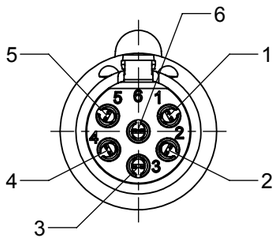

6 - PIN

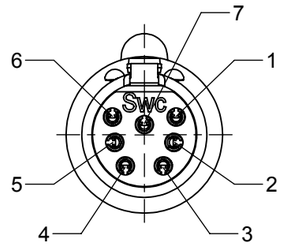

7 - PIN

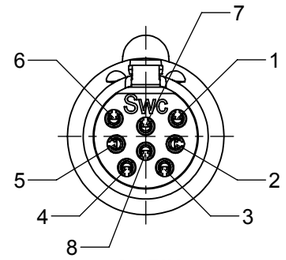

8 - PIN

AS VIEWED FROM FRONT MATING VIEW

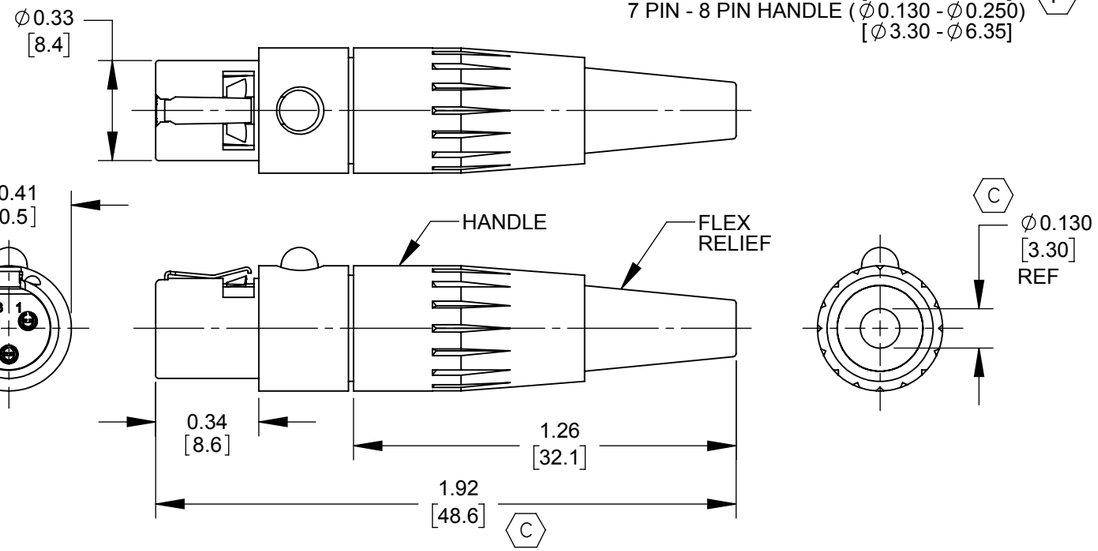

TA3FX SHOWN

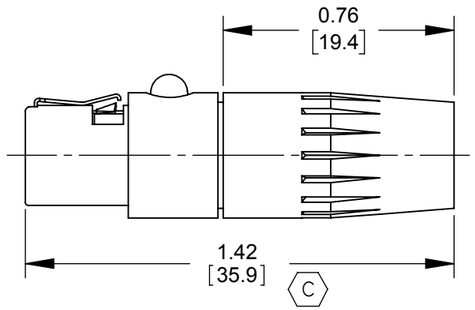

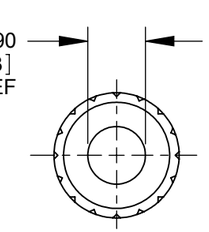

3 PIN - 6 PIN

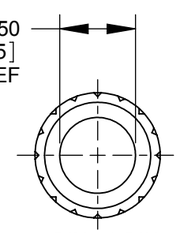

7 PIN - 8 PIN

TA*FLX DETAIL
LARGE CABLE HOLE

CUSTOMER DRAWING

NOTES:

1. MATERIALS:
   HOUSING - COPPER ALLOY, NICKEL PLATED OR BLACK CHROME PLATED
   LATCH - SPECIAL COPPER ALLOY, NICKEL PLATED
   LATCH BUTTON - THERMOPLASTIC, BLACK
   CONTACTS - COPPER ALLOY, SILVER PLATED OR GOLD PLATED
   INSERT - THERMOPLASTIC, DARK BROWN OR BLACK
   INSULATOR - THERMOPLASTIC, DARK BROWN
   CABLE CLAMP - STEEL, ELECTRO-TIN PLATED
   HANDLE - THERMOPLASTIC, BLACK, WHITE, OR NICKEL PLATED
   FLEX RELIEF - THERMOPLASTIC, BLACK OR WHITE
2. THIS PRODUCT IS RoHS COMPLIANT.

REV	ECO NUMBER	DATE	BY	APVD
G	27805	11-9-16	TO	TJK
F	27788	10-13-16	PC	TJK
E	27486	04-20-15	PC	TJK
D	27916	03-06-12	PC	TJK
C	25955	09-22-08	JEB	TJK
H	27971	12/13/17	PC	TJK

REVISIONS

UNLESS OTHERWISE SPECIFIED

1. ALL DIMENSIONS IN INCHES [mm]
   - TWO PLACE DECIMALS ±0.02 [0.5]
   - THREE PLACE DECIMALS ±0.005 [0.13]

DO NOT SCALE DRAWING

THIS DRAWING DESCRIBES A DESIGN CONSIDERED PROPRIETARY IN NATURE, DEVELOPED AND MANUFACTURED BY SWITCHCRAFT INC. AND IS RELEASED ON A CONFIDENTIAL BASIS FOR IDENTIFICATION PURPOSES ONLY.

SIZE	WIDTH	MULT	LBS/M	TEMPER

FINISH
SPEC No.

MATERIAL
SPEC No.

FIRST USED ON

SCALE 2:1

DATE DRAWN	BY	CHKD	APVD
11-02-10	JEB	JEB 11-02-10	TJK 03-08-11

Switchcraft®

SHEET 1 OF 1

NAME TINI QG FEMALE STRAIGHT CORD PLUG, RoHS

PART No. TA_FX SERIES

REV H

SolidWorks CAD File (B)