Notice for TAIYO YUDEN Products

Please read this notice before using the TAIYO YUDEN products.

⚠ REMINDERS

Product Information in this Catalog

Product information in this catalog is as of March 2023. All of the contents specified herein and production status of the products listed in this catalog are subject to change without notice due to technical improvement of our products, etc. Therefore, please check for the latest information carefully before practical application or use of our products.

Please note that TAIYO YUDEN shall not be in any way responsible for any damages and defects in products or equipment incorporating our products, which are caused under the conditions other than those specified in this catalog or individual product specification sheets.

Approval of Product Specifications

Please contact TAIYO YUDEN for further details of product specifications as the individual product specification sheets are available. When using our products, please be sure to approve our product specifications or make a written agreement on the product specification with TAIYO YUDEN in advance.

Pre-Evaluation in the Actual Equipment and Conditions

Please conduct validation and verification of our products in actual conditions of mounting and operating environment before using our products.

Limited Application

1. Equipment Intended for Use

The products listed in this catalog are intended for general-purpose and standard use in general electronic equipment for consumer (e.g., AV equipment, OA equipment, home electric appliances, office equipment, information and communication equipment including, without limitation, mobile phone, and PC) and other equipment specified in this catalog or the individual product specification sheets, or the equipment approved separately by TAIYO YUDEN.
TAIYO YUDEN has the product series intended for use in the following equipment. Therefore, when using our products for these equipment, please check available applications specified in this catalog or the individual product specification sheets and use the corresponding products.

Application	Product Series		Quality Grade *3
	Equipment *1	Category (Part Number Code *2)	
Automotive	Automotive Electronic Equipment (POWERTRAIN, SAFETY)	A	1
	Automotive Electronic Equipment (BODY & CHASSIS, INFOTAINMENT)	C	2
Industrial	Telecommunications Infrastructure and Industrial Equipment	B	2
Medical	Medical Devices classified as GHTF Class C (Japan Class III)	M	2
	Medical Devices classified as GHTF Classes A or B (Japan Classes I or II)	L	3
Consumer	General Electronic Equipment	S	3
	Only for Mobile Devices *4	E	4

*Notes: 1. Based on the general specifications required for electronic components for such equipment, which are recognized by TAIYO YUDEN, the use of each product series for the equipment is recommended. Please be sure to contact TAIYO YUDEN before using our products for equipment other than those covered by the product series.
2. On each of our part number, the 2nd code from the left is a code indicating the “Category” as shown in the above table. For details, please check the explanatory materials regarding the part numbering system of each of our products.
3. Each product series is assigned a “Quality Grade” from 1 to 4 in order of higher quality. Please do not incorporate a product into any equipment with a higher Quality Grade than the Quality Grade of such product without the prior written consent of TAIYO YUDEN.
4. The applications covered by this product series are limited to mobile devices (smartphone, tablet PC, smartwatch, handheld game console, etc.) among general electronic equipment for consumer. The design, specifications and operating environment, etc. differ from those of the product series for "General Electronic Equipment" (Category: S), so please check the individual product specification sheets for details. The product series for "General Electronic Equipment" (Category: S) can also be used for mobile devices.

▶ This catalog contains the typical specification only due to the limitation of space. When you consider the purchase of our products, please check our product specification sheets. For details of each product (characteristics graph, reliability information, precautions for use, and so on), see our website (http://www.ty-top.com/) .

2. Equipment Requiring Inquiry

Please be sure to contact TAIYO YUDEN for further information before using the products listed in this catalog for the following equipment (excluding intended equipment as specified in this catalog or the individual product specification sheets) which may cause loss of human life, bodily injury, serious property damage and/or serious public impact due to a failure or defect of the products and/or malfunction attributed thereto.

(1) Transportation equipment (automotive powertrain control system, train control system, and ship control system, etc.)
(2) Traffic signal equipment
(3) Disaster prevention equipment, crime prevention equipment
(4) Medical devices classified as GHTF Class C (Japan Class III)
(5) Highly public information network equipment, data-processing equipment (telephone exchange, and base station, etc.)
(6) Any other equipment requiring high levels of quality and/or reliability equal to the equipment listed above

3. Equipment Prohibited for Use

Please do not incorporate our products into the following equipment requiring extremely high levels of safety and/or reliability.

(1) Aerospace equipment (artificial satellite, rocket, etc.)
(2) Aviation equipment *1
(3) Medical devices classified as GHTF Class D (Japan Class IV), implantable medical devices *2
(4) Power generation control equipment (nuclear power, hydroelectric power, thermal power plant control system, etc.)
(5) Undersea equipment (submarine repeating equipment, etc.)
(6) Military equipment
(7) Any other equipment requiring extremely high levels of safety and/or reliability equal to the equipment listed above

*Notes: 1. There is a possibility that our products can be used only for aviation equipment that does not directly affect the safe operation of aircraft (e.g., in-flight entertainment, cabin light, electric seat, cooking equipment) if such use meets requirements specified separately by TAIYO YUDEN. Please be sure to contact TAIYO YUDEN for further information before using our products for such aviation equipment.

2. Implantable medical devices contain not only internal unit which is implanted in a body, but also external unit which is connected to the internal unit.

4. Limitation of Liability

Please note that unless you obtain prior written consent of TAIYO YUDEN, TAIYO YUDEN shall not be in any way responsible for any damages incurred by you or third parties arising from use of the products listed in this catalog for any equipment that is not intended for use by TAIYO YUDEN, or any equipment requiring inquiry to TAIYO YUDEN or prohibited for use by TAIYO YUDEN as described above.

Safety Design

When using our products for high safety and/or reliability-required equipment or circuits, please fully perform safety and/or reliability evaluation. In addition, please install (i) systems equipped with a protection circuit and a protection device and/or (ii) systems equipped with a redundant circuit or other system to prevent an unsafe status in the event of a single fault for a failsafe design to ensure safety.

Intellectual Property Rights

Information contained in this catalog is intended to convey examples of typical performances and/or applications of our products and is not intended to make any warranty with respect to the intellectual property rights or any other related rights of TAIYO YUDEN or any third parties nor grant any license under such rights.

Limited Warranty

Please note that the scope of warranty for our products is limited to the delivered our products themselves conforming to the product specifications specified in the individual product specification sheets, and TAIYO YUDEN shall not be in any way responsible for any damages resulting from a failure or defect in our products. Notwithstanding the foregoing, if there is a written agreement (e.g., supply and purchase agreement, quality assurance agreement) signed by TAIYO YUDEN and your company, TAIYO YUDEN will warrant our products in accordance with such agreement, provided, however, that our products shall be used for general-purpose and standard use in the equipment specified in this catalog or the individual product specification sheets.

TAIYO YUDEN's Official Sales Channel

The contents of this catalog are applicable to our products which are purchased from our sales offices or authorized distributors (hereinafter "TAIYO YUDEN's official sales channel"). Please note that the contents of this catalog are not applicable to our products purchased from any seller other than TAIYO YUDEN's official sales channel.

Caution for Export

Some of our products listed in this catalog may require specific procedures for export according to "U.S. Export Administration Regulations", "Foreign Exchange and Foreign Trade Control Law" of Japan, and other applicable regulations. Should you have any questions on this matter, please contact our sales staff.

▶ This catalog contains the typical specification only due to the limitation of space. When you consider the purchase of our products, please check our product specification sheets. For details of each product (characteristics graph, reliability information, precautions for use, and so on), see our website (http://www.ty-top.com/) .

Wire-wound Ferrite Power Inductors LSXN/LSXP series
for General Electronic Equipment for Consumer

Code in front of Series have been extracted from Part number, which describes the segment of products, such as kinds and characteristics.

REFLOW

■PART NUMBER　　＊Operating Temp.:−25〜+120℃(LSXN 4040/5050/6060/8080:−25〜+125℃)(Including self-generated heat)

L S X N	D	4 0 4 0	K K	L	1 0 0	M	D G
①	②	③	④	⑤	⑥	⑦	⑧

①Series

Code (1)(2)(3)(4)	
LSXN	Wire-wound Ferrite Power Inductor for General Electronic Equipment for Consumer
LSXP	Wire-wound Ferrite Power Inductor for General Electronic Equipment for Consumer

(1) Product Group

Code	
L	Inductors

(2) Category

Code	Recommended equipment	Quality Grade
S	General Electronic Equipment for Consumer	3

(3) Type

Code	
X	Ferrite Wire-wound (Drum type)

(4) Features, Characteristics

Code	
N	Standard Power choke
P	High current power choke

②Features

Code	Feature
D	Bottom electrode (Ag × solder)
E	Bottom electrode (Cu × solder)
H	Bottom electrode (Frame type)

③Dimensions(L × W)

Code	Dimensions(L × W)[mm]
2020	2.0 × 2.0
2424	2.4 × 2.4
3030	3.0 × 3.0
4040	4.0 × 4.0
5050	5.0 × 5.0
6060	6.0 × 6.0
8080	8.0 × 8.0
YE	4.5

④Dimensions(H)

Code	Dimensions(H)[mm]
KK	1.0
MK	1.2
PK	1.4
QK	1.5
TK	1.8
WK	2.0
WD	2.4
WE	2.5
WH	2.8
XK	3.0
XA	3.1
YK	4.0
YA	4.1
YB	4.2

⑤Packaging

Code	Packaging
T	Taping
L	Taping

⑥Nominal inductance

Code (example)	Nominal inductance[μH]
2R2	2.2
100	10
101	100

※R=Decimal point

⑦Inductance tolerance

Code	Inductance tolerance
M	±20%
N	±30%

⑧Internal code

▸ This catalog contains the typical specification only due to the limitation of space. When you consider the purchase of our products, please check our specification.
For details of each product (characteristics graph, reliability information, precautions for use, and so on), see our Web site (http://www.ty-top.com/) .

■STANDARD EXTERNAL DIMENSIONS / STANDARD QUANTITY

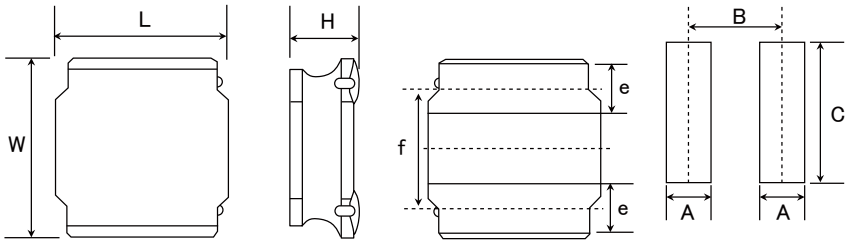

Recommended Land Patterns

Type	A	B	C
2020	0.65	1.35	2.0
2424	0.7	1.45	2.0
3030	0.8	2.2	2.7
4040	1.2	2.8	3.7
8080	1.8	5.6	7.5

Unit : mm

Type	L	W	H	e	f	Standard quantity [pcs] Taping
2020KK	2.0±0.1 (0.079±0.004)	2.0±0.1 (0.079±0.004)	1.0 max (0.039 max)	0.5±0.2 (0.020±0.008)	1.25±0.2 (0.050±0.008)	2500
2020MK	2.0±0.1 (0.079±0.004)	2.0±0.1 (0.079±0.004)	1.2 max (0.047 max)	0.5±0.2 (0.020±0.008)	1.25±0.2 (0.050±0.008)	2500
2424KK	2.4±0.1 (0.095±0.004)	2.4±0.1 (0.095±0.004)	1.0 max (0.039 max)	0.6±0.2 (0.024±0.008)	1.45±0.2 (0.057±0.008)	2500
2424MK	2.4±0.1 (0.095±0.004)	2.4±0.1 (0.095±0.004)	1.2 max (0.047 max)	0.6±0.2 (0.024±0.008)	1.45±0.2 (0.057±0.008)	2500
3030KK	3.0±0.1 (0.118±0.004)	3.0±0.1 (0.118±0.004)	1.0 max (0.039 max)	0.9±0.2 (0.035±0.008)	1.9±0.2 (0.075±0.008)	2000
3030MK	3.0±0.1 (0.118±0.004)	3.0±0.1 (0.118±0.004)	1.2 max (0.047 max)	0.9±0.2 (0.035±0.008)	1.9±0.2 (0.075±0.008)	2000
3030QK	3.0±0.1 (0.118±0.004)	3.0±0.1 (0.118±0.004)	1.5 max (0.059 max)	0.9±0.2 (0.035±0.008)	1.9±0.2 (0.075±0.008)	2000
4040KK	4.0±0.2 (0.158±0.008)	4.0±0.2 (0.158±0.008)	1.0 max (0.039 max)	1.1±0.2 (0.043±0.008)	2.5±0.2 (0.098±0.008)	5000
4040MK	4.0±0.2 (0.158±0.008)	4.0±0.2 (0.158±0.008)	1.2 max (0.047 max)	1.1±0.2 (0.043±0.008)	2.5±0.2 (0.098±0.008)	4500
4040TK	4.0±0.2 (0.158±0.008)	4.0±0.2 (0.158±0.008)	1.8 max (0.071 max)	1.1±0.2 (0.043±0.008)	2.5±0.2 (0.098±0.008)	3500
8080XK	8.0±0.2 (0.315±0.008)	8.0±0.2 (0.315±0.008)	3.0 max (0.118 max)	1.60±0.3 (0.063±0.012)	5.6±0.3 (0.22±0.012)	1000
8080YK	8.0±0.2 (0.315±0.008)	8.0±0.2 (0.315±0.008)	4.0 max (0.158 max)	1.60±0.3 (0.063±0.012)	5.6±0.3 (0.22±0.012)	1000
8080YB	8.0±0.2 (0.315±0.008)	8.0±0.2 (0.315±0.008)	4.2 max (0.165 max)	1.60±0.3 (0.063±0.012)	5.6±0.3 (0.22±0.012)	1000

Unit : mm (inch)

▸ This catalog contains the typical specification only due to the limitation of space. When you consider the purchase of our products, please check our specification.
For details of each product (characteristics graph, reliability information, precautions for use, and so on), see our Web site (http://www.ty-top.com/) .

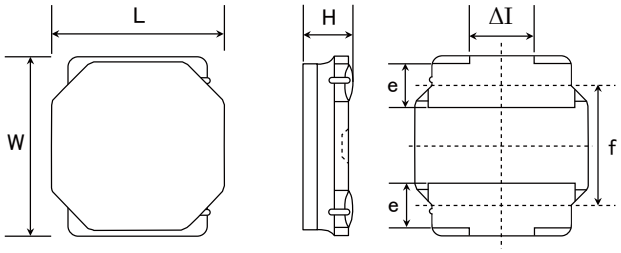

Recommended Land Patterns

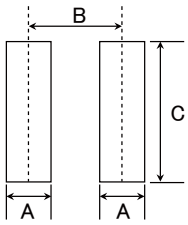

Type	A	B	C
5050	1.5	3.6	4.0
6060	1.6	4.7	5.7

Unit : mm

Type	L	W	H	e	f	ΔI	Standard quantity [pcs] Taping
5050KK	4.9±0.2 (0.193±0.008)	4.9±0.2 (0.193±0.008)	1.0 max (0.039 max)	1.2±0.2 (0.047±0.008)	3.3±0.2 (0.130±0.008)	1.3typ (0.051typ)	1000
5050MK	4.9±0.2 (0.193±0.008)	4.9±0.2 (0.193±0.008)	1.2 max (0.047 max)	1.2±0.2 (0.047±0.008)	3.3±0.2 (0.130±0.008)	1.3typ (0.051typ)	1000
5050PK	4.9±0.2 (0.193±0.008)	4.9±0.2 (0.193±0.008)	1.4 max (0.055 max)	1.2±0.2 (0.047±0.008)	3.3±0.2 (0.130±0.008)	1.3typ (0.051typ)	1000
5050WK	4.9±0.2 (0.193±0.008)	4.9±0.2 (0.193±0.008)	2.0 max (0.079 max)	1.2±0.2 (0.047±0.008)	3.3±0.2 (0.130±0.008)	1.3typ (0.051typ)	800
5050WD	4.9±0.2 (0.193±0.008)	4.9±0.2 (0.193±0.008)	2.4 max (0.095 max)	1.2±0.2 (0.047±0.008)	3.3±0.2 (0.130±0.008)	1.3typ (0.051typ)	2500
5050WE	4.9±0.2 (0.193±0.008)	4.9±0.2 (0.193±0.008)	2.5 max (0.098 max)	1.2±0.2 (0.047±0.008)	3.3±0.2 (0.130±0.008)	1.3typ (0.051typ)	2500
5050XK	4.9±0.2 (0.193±0.008)	4.9±0.2 (0.193±0.008)	3.0 max (0.118 max)	1.2±0.2 (0.047±0.008)	3.3±0.2 (0.130±0.008)	1.3typ (0.051typ)	500
5050XA	4.9±0.2 (0.193±0.008)	4.9±0.2 (0.193±0.008)	3.1 max (0.122 max)	1.2±0.2 (0.047±0.008)	3.3±0.2 (0.130±0.008)	1.3typ (0.051typ)	500
5050YK	4.9±0.2 (0.193±0.008)	4.9±0.2 (0.193±0.008)	4.0 max (0.158 max)	1.2±0.2 (0.047±0.008)	3.3±0.2 (0.130±0.008)	1.3typ (0.051typ)	1500
5050YA	4.9±0.2 (0.193±0.008)	4.9±0.2 (0.193±0.008)	4.1 max (0.161 max)	1.2±0.2 (0.047±0.008)	3.3±0.2 (0.130±0.008)	1.3typ (0.051typ)	1500
6060KK	6.0±0.2 (0.236±0.008)	6.0±0.2 (0.236±0.008)	1.0 max (0.039 max)	1.35±0.2 (0.053±0.008)	4.0±0.2 (0.158±0.008)	2.3typ (0.091typ)	1000
6060MK	6.0±0.2 (0.236±0.008)	6.0±0.2 (0.236±0.008)	1.2 max (0.047 max)	1.35±0.2 (0.053±0.008)	4.0±0.2 (0.158±0.008)	2.3typ (0.091typ)	1000
6060PK	6.0±0.2 (0.236±0.008)	6.0±0.2 (0.236±0.008)	1.4 max (0.055 max)	1.35±0.2 (0.053±0.008)	4.0±0.2 (0.158±0.008)	2.3typ (0.091typ)	1000
6060WK	6.0±0.2 (0.236±0.008)	6.0±0.2 (0.236±0.008)	2.0 max (0.079 max)	1.35±0.2 (0.053±0.008)	4.0±0.2 (0.158±0.008)	2.3typ (0.091typ)	2500
6060WH	6.0±0.2 (0.236±0.008)	6.0±0.2 (0.236±0.008)	2.8 max (0.110 max)	1.35±0.2 (0.053±0.008)	4.0±0.2 (0.158±0.008)	2.3typ (0.091typ)	2000
6060YE	6.0±0.2 (0.236±0.008)	6.0±0.2 (0.236±0.008)	4.5 max (0.177 max)	1.35±0.2 (0.053±0.008)	4.0±0.2 (0.158±0.008)	2.3typ (0.091typ)	1500

Unit : mm (inch)

▸ This catalog contains the typical specification only due to the limitation of space. When you consider the purchase of our products, please check our specification.
For details of each product (characteristics graph, reliability information, precautions for use, and so on), see our Web site (http://www.ty-top.com/) .

■PART NUMBER

●2020MK type

New part number	Old part number (for reference)	EHS	Nominal inductance [μH]	Inductance tolerance	Self-resonant frequency [MHz] (min.)	DC Resistance [Ω] (±20%)	Rated current ※) [mA]				Measuring frequency [kHz]
							Saturation current: Idc1		Temperature rise current: Idc2		
							Max.	Typ.	Max.	Typ.	
LSXND2020MKT1R0N0G	NRS2012T 1R0N GJ	RoHS	1.0	±30%	—	0.070	1,900	2,050	1,700	1,850	100
LSXND2020MKT1R5N0G	NRS2012T 1R5N GJ	RoHS	1.5	±30%	—	0.090	1,650	1,800	1,500	1,650	100
LSXND2020MKT2R2M0G	NRS2012T 2R2M GJ	RoHS	2.2	±20%	—	0.107	1,350	1,500	1,370	1,500	100
LSXND2020MKT3R3M0G	NRS2012T 3R3M GJ	RoHS	3.3	±20%	—	0.190	1,000	1,150	1,020	1,100	100
LSXND2020MKT4R7M0G	NRS2012T 4R7M GJ	RoHS	4.7	±20%	—	0.241	900	1,050	910	1,000	100

●2020KK type

New part number	Old part number (for reference)	EHS	Nominal inductance [μH]	Inductance tolerance	Self-resonant frequency [MHz] (min.)	DC Resistance [Ω] (±20%)	Rated current ※) [mA]				Measuring frequency [kHz]
							Saturation current: Idc1		Temperature rise current: Idc2		
							Max.	Typ.	Max.	Typ.	
LSXPD2020KKTR47N0G	NRV2010T R47N GF	RoHS	0.47	±30%	—	0.052	2,100	2,250	2,000	2,300	100
LSXPD2020KKTR68N0G	NRV2010T R68N GF	RoHS	0.68	±30%	—	0.060	1,850	2,000	1,850	2,100	100
LSXPD2020KKT1R0N0G	NRV2010T 1R0N GF	RoHS	1.0	±30%	—	0.080	1,550	1,700	1,600	1,850	100
LSXPD2020KKT1R5M0G	NRV2010T 1R5M GF	RoHS	1.5	±20%	—	0.100	1,350	1,450	1,450	1,650	100
LSXPD2020KKT2R2M0G	NRV2010T 2R2M GF	RoHS	2.2	±20%	—	0.175	1,100	1,200	1,100	1,200	100
LSXPD2020KKT3R3M0G	NRV2010T 3R3M GF	RoHS	3.3	±20%	—	0.250	880	950	1,000	1,100	100
LSXPD2020KKT4R7M0G	NRV2010T 4R7M GF	RoHS	4.7	±20%	—	0.320	760	810	820	930	100

●2020MK type

New part number	Old part number (for reference)	EHS	Nominal inductance [μH]	Inductance tolerance	Self-resonant frequency [MHz] (min.)	DC Resistance [Ω] (±20%)	Rated current ※) [mA]				Measuring frequency [kHz]
							Saturation current: Idc1		Temperature rise current: Idc2		
							Max.	Typ.	Max.	Typ.	
LSXPD2020MKT1R0N0G	NRV2012T 1R0N GF	RoHS	1.0	±30%	—	0.073	2,200	2,350	1,650	1,830	100
LSXPD2020MKT1R5N0G	NRV2012T 1R5N GF	RoHS	1.5	±30%	—	0.100	1,800	1,950	1,400	1,550	100
LSXPD2020MKT2R2M0G	NRV2012T 2R2M GF	RoHS	2.2	±20%	—	0.129	1,600	1,700	1,200	1,350	100
LSXPD2020MKT3R3M0G	NRV2012T 3R3M GF	RoHS	3.3	±20%	—	0.227	1,250	1,350	900	1,040	100
LSXPD2020MKT4R7M0G	NRV2012T 4R7M GF	RoHS	4.7	±20%	—	0.325	1,100	1,150	750	850	100

●2424KK type

New part number	Old part number (for reference)	EHS	Nominal inductance [μH]	Inductance tolerance	Self-resonant frequency [MHz] (min.)	DC Resistance [Ω] (±20%)	Rated current ※) [mA]				Measuring frequency [kHz]
							Saturation current: Idc1		Temperature rise current: Idc2		
							Max.	Typ.	Max.	Typ.	
LSXNE2424KKTR68NN	NRH2410T R68NN 4	RoHS	0.68	±30%	120	0.060	2,200	2,300	1,570	1,810	100
LSXNE2424KKT1R0NN	NRH2410T 1R0NN 4	RoHS	1.0	±30%	106	0.070	1,800	1,950	1,410	1,640	100
LSXNE2424KKT1R5MN	NRH2410T 1R5MN	RoHS	1.5	±20%	94	0.110	1,550	1,640	1,160	1,320	100
LSXNE2424KKT2R2MN	NRH2410T 2R2MN	RoHS	2.2	±20%	77	0.150	1,290	1,340	970	1,110	100
LSXNE2424KKT3R3MN	NRH2410T 3R3MN	RoHS	3.3	±20%	56	0.220	1,000	1,140	770	890	100
LSXNE2424KKT4R7MN	NRH2410T 4R7MN	RoHS	4.7	±20%	50	0.290	880	930	670	780	100
LSXNE2424KKT6R8MN	NRH2410T 6R8MN	RoHS	6.8	±20%	43	0.410	750	765	570	650	100
LSXNE2424KKT100MN	NRH2410T 100MN	RoHS	10	±20%	32	0.690	550	605	450	520	100
LSXNE2424KKT150MN	NRH2410T 150MN	RoHS	15	±20%	27	1.02	470	520	370	430	100
LSXNE2424KKT220MN	NRH2410T 220MN	RoHS	22	±20%	22	1.47	390	405	300	340	100

●2424MK type

New part number	Old part number (for reference)	EHS	Nominal inductance [μH]	Inductance tolerance	Self-resonant frequency [MHz] (min.)	DC Resistance [Ω] (±20%)	Rated current ※) [mA]				Measuring frequency [kHz]
							Saturation current: Idc1		Temperature rise current: Idc2		
							Max.	Typ.	Max.	Typ.	
LSXNE2424MKTR47NNG	NRH2412T R47NNGJ	RoHS	0.47	±30%	180	0.050	2,900	3,690	2,100	2,300	100
LSXNE2424MKT1R0NNG	NRH2412T 1R0NNGH	RoHS	1.0	±30%	101	0.077	2,350	2,610	1,300	1,540	100
LSXNE2424MKT1R5NNG	NRH2412T 1R5NNGH	RoHS	1.5	±30%	89	0.100	2,100	2,290	1,150	1,390	100
LSXNE2424MKT2R2MNG	NRH2412T 2R2MNGH	RoHS	2.2	±20%	72	0.140	1,700	1,940	1,000	1,190	100
LSXNE2424MKT3R3MNG	NRH2412T 3R3MNGH	RoHS	3.3	±20%	56	0.225	1,400	1,600	750	890	100
LSXNE2424MKT4R7MNG	NRH2412T 4R7MNGH	RoHS	4.7	±20%	45	0.300	1,150	1,280	650	770	100
LSXNE2424MKT6R8MNG	NRH2412T 6R8MNGH	RoHS	6.8	±20%	34	0.420	950	1,100	550	635	100
LSXNE2424MKT100MNG	NRH2412T 100MNGH	RoHS	10	±20%	29	0.600	810	900	450	510	100

●3030KK type

New part number	Old part number (for reference)	EHS	Nominal inductance [μH]	Inductance tolerance	Self-resonant frequency [MHz] (min.)	DC Resistance [Ω] (±20%)	Rated current ※) [mA]				Measuring frequency [kHz]
							Saturation current: Idc1		Temperature rise current: Idc2		
							Max.	Typ.	Max.	Typ.	
LSXNE3030KKT1R2NN	NRH3010T 1R2NN	RoHS	1.2	±30%	120	0.065	1,700	1,740	1,480	1,850	100
LSXNE3030KKT1R5NN	NRH3010T 1R5NN	RoHS	1.5	±30%	99	0.075	1,440	1,500	1,370	1,680	100
LSXNE3030KKT2R2MN	NRH3010T 2R2MN	RoHS	2.2	±20%	86	0.083	1,300	1,400	1,300	1,550	100
LSXNE3030KKT3R3MN	NRH3010T 3R3MN	RoHS	3.3	±20%	64	0.130	1,000	1,020	1,030	1,220	100
LSXNE3030KKT4R7MN	NRH3010T 4R7MN	RoHS	4.7	±20%	50	0.170	850	930	900	1,090	100
LSXNE3030KKT6R8MN	NRH3010T 6R8MN	RoHS	6.8	±20%	44	0.250	700	750	745	920	100
LSXNE3030KKT100MN	NRH3010T 100MN	RoHS	10	±20%	34	0.350	600	650	620	780	100
LSXNE3030KKT150MN	NRH3010T 150MN	RoHS	15	±20%	25	0.550	450	520	480	600	100
LSXNE3030KKT220MN	NRH3010T 220MN	RoHS	22	±20%	22	0.770	380	440	410	510	100
LSXNE3030KKT330MN	NRH3010T 330MN	RoHS	33	±20%	20	1.250	290	360	350	440	100
LSXNE3030KKT470MN	NRH3010T 470MN	RoHS	47	±20%	17	2.050	250	300	285	320	100

※) The saturation current value (Idc1) is the DC current value having inductance decrease down to 30%. (at 20℃)
※) The temperature rise current value (Idc2) is the DC current value having temperature increase up to 40℃. (at 20℃)
※) The rated current is the DC current value that satisfies both of current value saturation current value and temperature rise current value.

▸ This catalog contains the typical specification only due to the limitation of space. When you consider the purchase of our products, please check our specification.
For details of each product (characteristics graph, reliability information, precautions for use, and so on), see our Web site (http://www.ty-top.com/) .

■PART NUMBER

●3030MK type

New part number	Old part number (for reference)	EHS	Nominal inductance [μH]	Inductance tolerance	Self-resonant frequency [MHz] (min.)	DC Resistance [Ω] (±20%)	Rated current ※) [mA]				Measuring frequency [kHz]
							Saturation current: Idc1		Temperature rise current: Idc2		
							Max.	Typ.	Max.	Typ.	
LSXNE3030MKTR47NN	NRH3012T R47NN	RoHS	0.47	±30%	160	0.033	2,600	3,200	1,900	2,280	100
LSXNE3030MKT1R0NN	NRH3012T 1R0NN	RoHS	1.0	±30%	111	0.048	2,200	2,500	1,710	1,970	100
LSXNE3030MKT1R5NN	NRH3012T 1R5NN	RoHS	1.5	±30%	95	0.055	1,700	1,900	1,600	1,750	100
LSXNE3030MKT2R2MN	NRH3012T 2R2MN	RoHS	2.2	±20%	78	0.075	1,500	1,750	1,370	1,600	100
LSXNE3030MKT3R3MN	NRH3012T 3R3MN	RoHS	3.3	±20%	61	0.100	1,200	1,500	1,210	1,480	100
LSXNE3030MKT4R7MN	NRH3012T 4R7MN	RoHS	4.7	±20%	50	0.130	1,000	1,200	1,060	1,280	100
LSXNE3030MKT6R8MN	NRH3012T 6R8MN	RoHS	6.8	±20%	43	0.190	850	910	890	1,000	100
LSXNE3030MKT100MN	NRH3012T 100MN	RoHS	10	±20%	32	0.270	730	780	720	850	100
LSXNE3030MKT150MN	NRH3012T 150MN	RoHS	15	±20%	26	0.450	530	650	570	680	100
LSXNE3030MKT220MN	NRH3012T 220MN	RoHS	22	±20%	22	0.630	500	550	500	590	100
LSXNE3030MKT330MN	NRH3012T 330MN	RoHS	33	±20%	18	0.960	360	430	450	510	100
LSXNE3030MKT470MN	NRH3012T 470MN	RoHS	47	±20%	16	1.340	280	380	380	430	100

●3030MK type

New part number	Old part number (for reference)	EHS	Nominal inductance [μH]	Inductance tolerance	Self-resonant frequency [MHz] (min.)	DC Resistance [Ω] (±20%)	Rated current ※) [mA]				Measuring frequency [kHz]
							Saturation current: Idc1		Temperature rise current: Idc2		
							Max.	Typ.	Max.	Typ.	
LSXPD3030MKT1R0N	NRV3012T 1R0N	RoHS	1.0	±30%	110	0.065	2,500	3,000	1,600	1,970	100
LSXPD3030MKT1R5N	NRV3012T 1R5N	RoHS	1.5	±30%	92	0.075	2,100	2,500	1,400	1,610	100
LSXPD3030MKT2R2M	NRV3012T 2R2M	RoHS	2.2	±20%	70	0.120	1,800	2,100	1,100	1,330	100
LSXPD3030MKT3R3M	NRV3012T 3R3M	RoHS	3.3	±20%	55	0.150	1,600	1,900	1,000	1,260	100
LSXPD3030MKT4R7M	NRV3012T 4R7M	RoHS	4.7	±20%	48	0.190	1,250	1,500	850	1,040	100
LSXPD3030MKT6R8M	NRV3012T 6R8M	RoHS	6.8	±20%	40	0.300	950	1,200	650	800	100
LSXPD3030MKT100M	NRV3012T 100M	RoHS	10	±20%	32	0.470	800	990	550	640	100

●3030QK type

New part number	Old part number (for reference)	EHS	Nominal inductance [μH]	Inductance tolerance	Self-resonant frequency [MHz] (min.)	DC Resistance [Ω] (±20%)	Rated current ※) [mA]				Measuring frequency [kHz]
							Saturation current: Idc1		Temperature rise current: Idc2		
							Max.	Typ.	Max.	Typ.	
LSXND3030QKT1R0NNG	NRS3015T 1R0NNGH	RoHS	1.0	±30%	100	0.030	2,100	2,400	2,100	2,350	100
LSXND3030QKT1R5NNG	NRS3015T 1R5NNGH	RoHS	1.5	±30%	87	0.038	1,800	2,100	1,820	2,100	100
LSXND3030QKT2R2MNG	NRS3015T 2R2MNGH	RoHS	2.2	±20%	64	0.058	1,480	1,700	1,500	1,800	100
LSXND3030QKT3R3MNG	NRS3015T 3R3MNGH	RoHS	3.3	±20%	49	0.078	1,210	1,400	1,230	1,500	100
LSXND3030QKT4R7MNG	NRS3015T 4R7MNGH	RoHS	4.7	±20%	40	0.120	1,020	1,100	1,040	1,300	100
LSXND3030QKT6R8MNG	NRS3015T 6R8MNGH	RoHS	6.8	±20%	36	0.160	870	920	880	1,100	100
LSXND3030QKT100MNG	NRS3015T 100MNGH	RoHS	10	±20%	28	0.220	700	750	710	840	100
LSXND3030QKT150MNG	NRS3015T 150MNGH	RoHS	15	±20%	23	0.325	580	680	680	760	100
LSXND3030QKT220MNG	NRS3015T 220MNGH	RoHS	22	±20%	20	0.520	470	540	470	530	100
LSXND3030QKT330MNG	NRS3015T 330MNGH	RoHS	33	±20%	18	0.780	400	440	440	490	100
LSXND3030QKT470MNG	NRS3015T 470MNGH	RoHS	47	±20%	17	1.100	325	380	350	380	100

●4040KK type

New part number	Old part number (for reference)	EHS	Nominal inductance [μH]	Inductance tolerance	Self-resonant frequency [MHz] (min.)	DC Resistance [Ω] (±20%)	Rated current ※) [mA]				Measuring frequency [kHz]
							Saturation current: Idc1		Temperature rise current: Idc2		
							Max.	Typ.	Max.	Typ.	
LSXND4040KKL1R0NDG	NRS4010T 1R0NDGG	RoHS	1.0	±30%	116	0.056	2,000	2,280	1,900	2,390	100
LSXND4040KKL2R2MDG	NRS4010T 2R2MDGG	RoHS	2.2	±20%	73	0.085	1,200	1,610	1,500	1,800	100
LSXND4040KKL3R3MDG	NRS4010T 3R3MDGG	RoHS	3.3	±20%	58	0.100	1,100	1,300	1,400	1,700	100
LSXND4040KKL4R7MDG	NRS4010T 4R7MDGG	RoHS	4.7	±20%	47	0.140	950	1,100	1,200	1,450	100
LSXND4040KKL6R8MDG	NRS4010T 6R8MDGG	RoHS	6.8	±20%	38	0.200	800	890	1,000	1,200	100
LSXND4040KKL100MDG	NRS4010T 100MDGG	RoHS	10	±20%	31	0.300	620	760	750	860	100
LSXND4040KKL150MDG	NRS4010T 150MDGG	RoHS	15	±20%	24	0.430	540	635	600	700	100
LSXND4040KKL220MDG	NRS4010T 220MDGG	RoHS	22	±20%	19	0.570	450	540	500	600	100
LSXND4040KKL330MDG	NRS4010T 330MDGG	RoHS	33	±20%	15	0.900	350	440	400	460	100
LSXND4040KKL470MDG	NRS4010T 470MDGG	RoHS	47	±20%	13	1.250	300	350	350	370	100

●4040MK type

New part number	Old part number (for reference)	EHS	Nominal inductance [μH]	Inductance tolerance	Self-resonant frequency [MHz] (min.)	DC Resistance [Ω] (±20%)	Rated current ※) [mA]				Measuring frequency [kHz]
							Saturation current: Idc1		Temperature rise current: Idc2		
							Max.	Typ.	Max.	Typ.	
LSXND4040MKL1R0NDG	NRS4012T 1R0NDGG	RoHS	1.0	±30%	100	0.042	2,800	2,900	2,200	2,670	100
LSXND4040MKL1R5NDG	NRS4012T 1R5NDGG	RoHS	1.5	±30%	90	0.051	2,300	2,500	2,000	2,430	100
LSXND4040MKL2R2MDG	NRS4012T 2R2MDGJ	RoHS	2.2	±20%	70	0.060	1,650	1,950	1,900	2,100	100
LSXND4040MKL3R3MDG	NRS4012T 3R3MDGJ	RoHS	3.3	±20%	60	0.070	1,400	1,700	1,700	1,880	100
LSXND4040MKL4R7MDG	NRS4012T 4R7MDGJ	RoHS	4.7	±20%	45	0.095	1,200	1,320	1,500	1,570	100
LSXND4040MKL6R8MDG	NRS4012T 6R8MDGJ	RoHS	6.8	±20%	35	0.125	900	1,170	1,300	1,400	100
LSXND4040MKL100MDG	NRS4012T 100MDGJ	RoHS	10	±20%	30	0.170	800	990	1,100	1,200	100
LSXND4040MKL150MDG	NRS4012T 150MDGJ	RoHS	15	±20%	24	0.260	650	820	750	840	100
LSXND4040MKL220MDG	NRS4012T 220MDGJ	RoHS	22	±20%	18	0.400	500	620	620	650	100
LSXND4040MKL330MDG	NRS4012T 330MDGJ	RoHS	33	±20%	15	0.600	400	500	480	530	100
LSXND4040MKL470MDG	NRS4012T 470MDGJ	RoHS	47	±20%	12	0.770	350	430	420	470	100

※) The saturation current value (Idc1) is the DC current value having inductance decrease down to 30%. (at 20℃)
※) The temperature rise current value (Idc2) is the DC current value having temperature increase up to 40℃. (at 20℃)
※) The rated current is the DC current value that satisfies both of current value saturation current value and temperature rise current value.

▸ This catalog contains the typical specification only due to the limitation of space. When you consider the purchase of our products, please check our specification.
For details of each product (characteristics graph, reliability information, precautions for use, and so on), see our Web site (http://www.ty-top.com/) .

■PART NUMBER

●4040TK type

New part number	Old part number (for reference)	EHS	Nominal inductance [μH]	Inductance tolerance	Self-resonant frequency [MHz] (min.)	DC Resistance [Ω] (±20%)	Rated current ※) [mA]				Measuring frequency [kHz]
							Saturation current: Idc1		Temperature rise current: Idc2		
							Max.	Typ.	Max.	Typ.	
LSXND4040TKL1R0NDG	NRS4018T 1R0NDGJ	RoHS	1.0	±30%	90	0.027	4,000	4,590	3,200	3,720	100
LSXND4040TKL1R5NDG	NRS4018T 1R5NDGJ	RoHS	1.5	±30%	75	0.037	3,300	3,750	2,400	3,000	100
LSXND4040TKL2R2MDG	NRS4018T 2R2MDGJ	RoHS	2.2	±20%	60	0.042	3,000	3,110	2,200	2,590	100
LSXND4040TKL3R3MDG	NRS4018T 3R3MDGJ	RoHS	3.3	±20%	45	0.055	2,300	2,560	2,000	2,240	100
LSXND4040TKL4R7MDG	NRS4018T 4R7MDGJ	RoHS	4.7	±20%	35	0.070	2,000	2,330	1,700	1,880	100
LSXND4040TKL6R8MDG	NRS4018T 6R8MDGJ	RoHS	6.8	±20%	30	0.098	1,600	1,820	1,450	1,690	100
LSXND4040TKL100MDG	NRS4018T 100MDGJ	RoHS	10	±20%	25	0.150	1,300	1,440	1,200	1,250	100
LSXND4040TKL150MDG	NRS4018T 150MDGJ	RoHS	15	±20%	18	0.210	1,100	1,150	850	915	100
LSXND4040TKL220MDG	NRS4018T 220MDGJ	RoHS	22	±20%	15	0.290	900	920	720	810	100
LSXND4040TKL330MDG	NRS4018T 330MDGJ	RoHS	33	±20%	12	0.460	700	830	550	630	100
LSXND4040TKL470MDG	NRS4018T 470MDGJ	RoHS	47	±20%	10	0.650	600	700	440	520	100
LSXND4040TKL680MDG	NRS4018T 680MDGJ	RoHS	68	±20%	8.3	1.00	520	600	320	400	100
LSXND4040TKL101MDG	NRS4018T 101MDGJ	RoHS	100	±20%	6.5	1.45	420	490	280	330	100
LSXND4040TKL151MDG	NRS4018T 151MDGJ	RoHS	150	±20%	5.5	2.30	340	390	220	280	100
LSXND4040TKL221MDG	NRS4018T 221MDGJ	RoHS	220	±20%	4.0	3.80	275	310	170	210	100

●5050KK type

New part number	Old part number (for reference)	EHS	Nominal inductance [μH]	Inductance tolerance	Self-resonant frequency [MHz] (min.)	DC Resistance [Ω] (±20%)	Rated current ※) [mA]				Measuring frequency [kHz]
							Saturation current: Idc1		Temperature rise current: Idc2		
							Max.	Typ.	Max.	Typ.	
LSXND5050KKT1R0NMG	NRS5010T 1R0NMGF	RoHS	1.0	±30%	95	0.070	2,350	2,510	1,750	2,000	100
LSXND5050KKT2R2NMG	NRS5010T 2R2NMGF	RoHS	2.2	±30%	65	0.105	1,500	1,710	1,400	1,600	100
LSXND5050KKT3R3MMG	NRS5010T 3R3MMGF	RoHS	3.3	±20%	42	0.125	1,400	1,530	1,250	1,520	100
LSXND5050KKT4R7MMG	NRS5010T 4R7MMGF	RoHS	4.7	±20%	37	0.145	1,200	1,340	1,150	1,390	100
LSXND5050KKT6R8MMG	NRS5010T 6R8MMGF	RoHS	6.8	±20%	33	0.185	1,000	1,120	1,000	1,210	100
LSXND5050KKT100MMG	NRS5010T 100MMGF	RoHS	10	±20%	23	0.250	850	970	900	950	100
LSXND5050KKT150MMG	NRS5010T 150MMGF	RoHS	15	±20%	19	0.400	680	740	650	700	100
LSXND5050KKT220MMG	NRS5010T 220MMGF	RoHS	22	±20%	15	0.600	550	620	450	560	100

●5050MK type

New part number	Old part number (for reference)	EHS	Nominal inductance [μH]	Inductance tolerance	Self-resonant frequency [MHz] (min.)	DC Resistance [Ω] (±20%)	Rated current ※) [mA]				Measuring frequency [kHz]
							Saturation current: Idc1		Temperature rise current: Idc2		
							Max.	Typ.	Max.	Typ.	
LSXND5050MKT1R0NMG	NRS5012T 1R0NMGF	RoHS	1.0	±30%	100	0.053	4,500	4,670	2,300	2,750	100
LSXND5050MKT1R5NMG	NRS5012T 1R5NMGF	RoHS	1.5	±30%	86	0.070	3,800	3,970	2,200	2,470	100
LSXND5050MKT2R2MMG	NRS5012T 2R2MMGF	RoHS	2.2	±20%	70	0.085	3,100	3,510	2,000	2,300	100
LSXND5050MKT3R3MMG	NRS5012T 3R3MMGF	RoHS	3.3	±20%	48	0.160	2,400	2,580	1,450	1,650	100
LSXND5050MKT4R7MMG	NRS5012T 4R7MMGF	RoHS	4.7	±20%	40	0.180	2,200	2,320	1,400	1,560	100
LSXND5050MKT6R8MMG	NRS5012T 6R8MMGF	RoHS	6.8	±20%	36	0.260	1,700	1,950	1,100	1,260	100
LSXND5050MKT100MMG	NRS5012T 100MMGF	RoHS	10	±20%	26	0.420	1,400	1,550	850	1,000	100
LSXND5050MKT150MMG	NRS5012T 150MMGF	RoHS	15	±20%	22	0.670	1,200	1,240	640	740	100

●5050PK type

New part number	Old part number (for reference)	EHS	Nominal inductance [μH]	Inductance tolerance	Self-resonant frequency [MHz] (min.)	DC Resistance [Ω] (±20%)	Rated current ※) [mA]				Measuring frequency [kHz]
							Saturation current: Idc1		Temperature rise current: Idc2		
							Max.	Typ.	Max.	Typ.	
LSXND5050PKTR47NMG	NRS5014T R47NMGG	RoHS	0.47	±30%	185	0.025	5,800	6,400	3,300	3,470	100
LSXND5050PKT1R2NMG	NRS5014T 1R2NMGG	RoHS	1.2	±30%	86	0.045	3,800	4,200	2,400	3,000	100
LSXND5050PKT2R2NMG	NRS5014T 2R2NMGG	RoHS	2.2	±30%	56	0.065	2,800	3,100	2,000	2,400	100
LSXND5050PKT3R3NMG	NRS5014T 3R3NMGG	RoHS	3.3	±30%	48	0.080	2,350	2,650	1,700	2,200	100
LSXND5050PKT4R7NMG	NRS5014T 4R7NMGG	RoHS	4.7	±30%	41	0.100	2,050	2,400	1,400	1,900	100
LSXND5050PKT6R8MMG	NRS5014T 6R8MMGG	RoHS	6.8	±20%	33	0.150	1,600	1,850	1,200	1,450	100
LSXND5050PKT100MMG	NRS5014T 100MMGG	RoHS	10	±20%	27	0.200	1,400	1,600	1,050	1,250	100
LSXND5050PKT150MMG	NRS5014T 150MMGG	RoHS	15	±20%	20	0.320	1,100	1,300	650	790	100
LSXND5050PKT220MMG	NRS5014T 220MMGG	RoHS	22	±20%	16	0.450	900	1,000	550	660	100

●5050WK type

New part number	Old part number (for reference)	EHS	Nominal inductance [μH]	Inductance tolerance	Self-resonant frequency [MHz] (min.)	DC Resistance [Ω] (±20%)	Rated current ※) [mA]				Measuring frequency [kHz]
							Saturation current: Idc1		Temperature rise current: Idc2		
							Max.	Typ.	Max.	Typ.	
LSXND5050WKTR47NMG	NRS5020T R47NMGJ	RoHS	0.47	±30%	230	0.012	6,100	6,900	5,000	5,800	100
LSXND5050WKT1R0NMG	NRS5020T 1R0NMGJ	RoHS	1.0	±30%	81	0.021	4,000	4,500	3,600	3,710	100
LSXND5050WKT1R5NMG	NRS5020T 1R5NMGJ	RoHS	1.5	±30%	68	0.026	3,350	3,800	3,200	3,540	100
LSXND5050WKT2R2NMG	NRS5020T 2R2NMGJ	RoHS	2.2	±30%	57	0.035	2,900	3,200	2,900	3,200	100
LSXND5050WKT3R3NMG	NRS5020T 3R3NMGJ	RoHS	3.3	±30%	46	0.048	2,400	2,700	2,400	3,080	100
LSXND5050WKT4R7MMG	NRS5020T 4R7MMGJ	RoHS	4.7	±20%	37	0.060	2,000	2,270	2,000	2,370	100
LSXND5050WKT6R8MMG	NRS5020T 6R8MMGJ	RoHS	6.8	±20%	30	0.090	1,600	1,850	1,650	2,200	100
LSXND5050WKT100MMG	NRS5020T 100MMGJ	RoHS	10	±20%	24	0.120	1,300	1,480	1,450	1,850	100
LSXND5050WKT150MMG	NRS5020T 150MMGJ	RoHS	15	±20%	20	0.165	1,100	1,260	1,200	1,480	100
LSXND5050WKT220MMG	NRS5020T 220MMGJ	RoHS	22	±20%	17	0.260	900	1,100	1,000	1,230	100
LSXND5050WKT470MMG	NRS5020T 470MMGJ	RoHS	47	±20%	12	0.435	630	750	560	610	100
LSXND5050WKT101MMG	NRS5020T 101MMGJ	RoHS	100	±20%	7	0.850	420	510	400	450	100

※) The saturation current value (Idc1) is the DC current value having inductance decrease down to 30%. (at 20℃)
※) The temperature rise current value (Idc2) is the DC current value having temperature increase up to 40℃. (at 20℃)
※) The rated current is the DC current value that satisfies both of current value saturation current value and temperature rise current value.

■PART NUMBER

●5050WE/5050WD type

New part number	Old part number (for reference)	EHS	Nominal inductance [μH]	Inductance tolerance	Self-resonant frequency [MHz] (min.)	DC Resistance [Ω] (±20%)	Rated current ※) [mA]				Measuring frequency [kHz]
							Saturation current: Idc1		Temperature rise current: Idc2		
							Max.	Typ.	Max.	Typ.	
LSXND5050WEL1R0NMG	NRS5024T 1R0NMGJ	RoHS	1.0	±30%	85	0.016	5,800	6,800	4,400	4,900	100
LSXND5050WEL1R5NMG	NRS5024T 1R5NMGJ	RoHS	1.5	±30%	67	0.022	5,200	5,800	3,600	4,300	100
LSXND5050WDL2R2NMG	NRS5024T 2R2NMGJ	RoHS	2.2	±30%	51	0.029	4,100	4,800	3,100	3,600	100
LSXND5050WDL3R3NMG	NRS5024T 3R3NMGJ	RoHS	3.3	±30%	41	0.043	3,100	3,700	2,400	2,750	100
LSXND5050WDL4R7MMG	NRS5024T 4R7MMGJ	RoHS	4.7	±20%	37	0.055	2,700	3,400	2,000	2,400	100
LSXND5050WDL6R8MMG	NRS5024T 6R8MMGJ	RoHS	6.8	±20%	28	0.080	2,200	2,750	1,600	1,800	100
LSXND5050WDL100MMG	NRS5024T 100MMGJ	RoHS	10	±20%	21	0.125	1,700	2,100	1,200	1,460	100
LSXND5050WDL150MMG	NRS5024T 150MMGJ	RoHS	15	±20%	18	0.170	1,400	1,750	1,000	1,250	100
LSXND5050WDL220MMG	NRS5024T 220MMGJ	RoHS	22	±20%	15	0.230	1,200	1,450	820	900	100
LSXND5050WDL330MMG	NRS5024T 330MMGJ	RoHS	33	±20%	11	0.370	1,000	1,200	630	700	100

●5050XA/5050XK type

New part number	Old part number (for reference)	EHS	Nominal inductance [μH]	Inductance tolerance	Self-resonant frequency [MHz] (min.)	DC Resistance [Ω] (±30%)	Rated current ※) [mA]				Measuring frequency [kHz]
							Saturation current: Idc1		Temperature rise current: Idc2		
							Max.	Typ.	Max.	Typ.	
LSXND5050XATR47NMG	NRS5030T R47NMGJ	RoHS	0.47	±30%	185	0.010	9,000	9,400	5,000	5,900	100
LSXND5050XAT1R0NMG	NRS5030T 1R0NMGJ	RoHS	1.0	±30%	110	0.015	6,600	7,400	4,000	4,900	100
LSXND5050XAT2R2NMG	NRS5030T 2R2NMGJ	RoHS	2.2	±30%	46	0.023	4,200	5,000	3,500	4,100	100
LSXND5050XAT3R3MMG	NRS5030T 3R3MMGJ	RoHS	3.3	±20%	36	0.030	3,600	3,900	3,000	3,600	100
LSXND5050XAT4R7MMG	NRS5030T 4R7MMGJ	RoHS	4.7	±20%	31	0.035	3,100	3,500	2,600	3,000	100
LSXND5050XAT6R8MMG	NRS5030T 6R8MMGJ	RoHS	6.8	±20%	22	0.052	2,500	2,800	2,300	2,500	100
LSXND5050XAT100MMG	NRS5030T 100MMGJ	RoHS	10	±20%	20	0.070	2,100	2,300	1,700	2,000	100
LSXND5050XKT150MMG	NRS5030T 150MMGJ	RoHS	15	±20%	14	0.125	1,600	1,800	1,400	1,550	100
LSXND5050XKT220MMG	NRS5030T 220MMGJ	RoHS	22	±20%	13	0.180	1,400	1,500	1,050	1,200	100
LSXND5050XKT330MMG	NRS5030T 330MMGJ	RoHS	33	±20%	10	0.225	1,150	1,250	800	950	100
LSXND5050XKT470MMG	NRS5030T 470MMGJ	RoHS	47	±20%	9	0.325	950	1,050	700	800	100

●5050YA/5050YK type

New part number	Old part number (for reference)	EHS	Nominal inductance [μH]	Inductance tolerance	Self-resonant frequency [MHz] (min.)	DC Resistance [Ω] (±30%)	Rated current ※) [mA]				Measuring frequency [kHz]
							Saturation current: Idc1		Temperature rise current: Idc2		
							Max.	Typ.	Max.	Typ.	
LSXND5050YAL1R5NMG	NRS5040T 1R5NMGJ	RoHS	1.5	±30%	60	0.017	6,400	6,530	4,500	4,730	100
LSXND5050YAL2R2NMG	NRS5040T 2R2NMGJ	RoHS	2.2	±30%	42	0.022	5,000	5,250	3,700	4,080	100
LSXND5050YAL3R3NMG	NRS5040T 3R3NMGJ	RoHS	3.3	±30%	32	0.027	4,000	4,280	3,300	3,770	100
LSXND5050YAL4R7NMG	NRS5040T 4R7NMGK	RoHS	4.7	±30%	28	0.029	3,300	3,470	3,100	3,500	100
LSXND5050YAL6R8MMG	NRS5040T 6R8MMGJ	RoHS	6.8	±20%	21	0.049	2,800	2,910	2,400	2,470	100
LSXND5050YAL100MMG	NRS5040T 100MMGJ	RoHS	10	±20%	18	0.056	2,300	2,470	2,100	2,210	100
LSXND5050YKL150MMG	NRS5040T 150MMGJ	RoHS	15	±20%	13	0.080	2,000	2,150	1,800	1,920	100
LSXND5050YKL220MMG	NRS5040T 220MMGK	RoHS	22	±20%	9	0.126	1,500	1,580	1,400	1,470	100
LSXND5050YKL330MMG	NRS5040T 330MMGJ	RoHS	33	±20%	7	0.180	1,300	1,390	1,200	1,270	100
LSXND5050YKL470MMG	NRS5040T 470MMGJ	RoHS	47	±20%	6	0.310	1,100	1,150	900	950	100

●6060KK type

New part number	Old part number (for reference)	EHS	Nominal inductance [μH]	Inductance tolerance	Self-resonant frequency [MHz] (min.)	DC Resistance [Ω] (±20%)	Rated current ※) [mA]				Measuring frequency [kHz]
							Saturation current: Idc1		Temperature rise current: Idc2		
							Max.	Typ.	Max.	Typ.	
LSXND6060KKT1R5MMG	NRS6010T 1R5MMGF	RoHS	1.5	±20%	77	0.090	2,400	2,650	1,900	2,150	100
LSXND6060KKT2R2MMG	NRS6010T 2R2MMGF	RoHS	2.2	±20%	56	0.110	1,900	2,120	1,700	1,950	100
LSXND6060KKT3R3MMG	NRS6010T 3R3MMGF	RoHS	3.3	±20%	42	0.135	1,600	1,750	1,500	1,750	100
LSXND6060KKT4R7MMG	NRS6010T 4R7MMGF	RoHS	4.7	±20%	36	0.165	1,300	1,470	1,400	1,600	100
LSXND6060KKT6R8MMG	NRS6010T 6R8MMGF	RoHS	6.8	±20%	30	0.220	1,200	1,300	1,200	1,320	100
LSXND6060KKT100MMG	NRS6010T 100MMGF	RoHS	10	±20%	25	0.270	1,000	1,100	1,100	1,200	100
LSXND6060KKT220MMG	NRS6010T 220MMGF	RoHS	22	±20%	12	0.580	650	720	700	740	100

●6060MK type

New part number	Old part number (for reference)	EHS	Nominal inductance [μH]	Inductance tolerance	Self-resonant frequency [MHz] (min.)	DC Resistance [Ω] (±20%)	Rated current ※) [mA]				Measuring frequency [kHz]
							Saturation current: Idc1		Temperature rise current: Idc2		
							Max.	Typ.	Max.	Typ.	
LSXND6060MKT1R0NMG	NRS6012T 1R0NMGJ	RoHS	1.0	±30%	95	0.050	3,000	3,900	2,400	2,700	100
LSXND6060MKT1R5NMG	NRS6012T 1R5NMGG	RoHS	1.5	±30%	69	0.067	2,600	3,500	2,100	2,300	100
LSXND6060MKT2R5NMG	NRS6012T 2R5NMGG	RoHS	2.5	±30%	45	0.090	2,100	2,900	1,800	2,100	100
LSXND6060MKT3R3NMG	NRS6012T 3R3NMGG	RoHS	3.3	±30%	42	0.105	1,800	2,500	1,700	1,950	100
LSXND6060MKT4R7MMG	NRS6012T 4R7MMGG	RoHS	4.7	±20%	36	0.125	1,600	2,100	1,550	1,750	100
LSXND6060MKT5R3MMG	NRS6012T 5R3MMGJ	RoHS	5.3	±20%	34	0.125	1,500	1,750	1,550	1,750	100
LSXND6060MKT6R8MMG	NRS6012T 6R8MMGJ	RoHS	6.8	±20%	30	0.165	1,300	1,600	1,350	1,600	100
LSXND6060MKT100MMG	NRS6012T 100MMGJ	RoHS	10	±20%	22	0.200	1,000	1,400	1,200	1,380	100
LSXND6060MKT150MMG	NRS6012T 150MMGJ	RoHS	15	±20%	18	0.295	800	1,100	800	950	100
LSXND6060MKT220MMG	NRS6012T 220MMGJ	RoHS	22	±20%	12	0.465	760	900	650	750	100
LSXND6060MKT330MMG	NRS6012T 330MMGJ	RoHS	33	±20%	8	0.580	590	800	550	670	100
LSXND6060MKT470MMG	NRS6012T 470MMGJ	RoHS	47	±20%	6	0.965	520	630	460	540	100
LSXND6060MKT680MMG	NRS6012T 680MMGJ	RoHS	68	±20%	3	1.16	440	560	410	450	100
LSXND6060MKT101MMG	NRS6012T 101MMGJ	RoHS	100	±20%	1	1.67	350	490	320	380	100

※) The saturation current value (Idc1) is the DC current value having inductance decrease down to 30%. (at 20℃)
※) The temperature rise current value (Idc2) is the DC current value having temperature increase up to 40℃. (at 20℃)
※) The rated current is the DC current value that satisfies both of current value saturation current value and temperature rise current value.

■PART NUMBER

●6060PK type

New part number	Old part number (for reference)	EHS	Nominal inductance [μH]	Inductance tolerance	Self-resonant frequency [MHz] (min.)	DC Resistance [Ω] (±20%)	Rated current ※) [mA]				Measuring frequency [kHz]
							Saturation current: Idc1		Temperature rise current: Idc2		
							Max.	Typ.	Max.	Typ.	
LSXND6060PKT1R2NMG	NRS6014T 1R2NMGG	RoHS	1.2	±30%	77	0.042	4,000	4,400	2,750	3,200	100
LSXND6060PKT2R2NMG	NRS6014T 2R2NMGG	RoHS	2.2	±30%	61	0.055	3,000	3,500	2,300	2,600	100
LSXND6060PKT3R3NMG	NRS6014T 3R3NMGG	RoHS	3.3	±30%	41	0.075	2,500	2,600	2,000	2,200	100
LSXND6060PKT4R7MMG	NRS6014T 4R7MMGG	RoHS	4.7	±20%	36	0.090	2,000	2,170	1,900	1,950	100
LSXND6060PKT6R8MMG	NRS6014T 6R8MMGG	RoHS	6.8	±20%	30	0.115	1,700	1,880	1,650	1,700	100
LSXND6060PKT100MMG	NRS6014T 100MMGG	RoHS	10	±20%	24	0.140	1,400	1,540	1,400	1,500	100
LSXND6060PKT150MMG	NRS6014T 150MMGG	RoHS	15	±20%	20	0.210	1,150	1,300	1,200	1,280	100
LSXND6060PKT220MMG	NRS6014T 220MMGG	RoHS	22	±20%	16	0.300	950	1,100	1,000	1,090	100

●6060WK type

New part number	Old part number (for reference)	EHS	Nominal inductance [μH]	Inductance tolerance	Self-resonant frequency [MHz] (min.)	DC Resistance [Ω] (±20%)	Rated current ※) [mA]				Measuring frequency [kHz]
							Saturation current: Idc1		Temperature rise current: Idc2		
							Max.	Typ.	Max.	Typ.	
LSXND6060WKL0R8NMG	NRS6020T 0R8NMGG	RoHS	0.8	±30%	110	0.020	6,400	7,400	4,100	4,800	100
LSXND6060WKL1R5NMG	NRS6020T 1R5NMGJ	RoHS	1.5	±30%	93	0.026	4,300	5,300	3,600	4,200	100
LSXND6060WKL2R2NMG	NRS6020T 2R2NMGJ	RoHS	2.2	±30%	73	0.034	3,200	4,000	2,900	3,400	100
LSXND6060WKL3R3NMG	NRS6020T 3R3NMGJ	RoHS	3.3	±30%	55	0.040	2,800	3,400	2,750	3,100	100
LSXND6060WKL4R7NMG	NRS6020T 4R7NMGJ	RoHS	4.7	±30%	43	0.058	2,400	2,800	2,150	2,500	100
LSXND6060WKL6R8NMG	NRS6020T 6R8NMGJ	RoHS	6.8	±30%	30	0.085	2,000	2,600	1,800	2,100	100
LSXND6060WKL100MMG	NRS6020T 100MMGG	RoHS	10	±20%	18	0.125	1,900	2,240	1,500	1,700	100
LSXND6060WKL220MMG	NRS6020T 220MMGG	RoHS	22	±20%	11	0.290	1,250	1,470	950	1,100	100

●6060WH type

New part number	Old part number (for reference)	EHS	Nominal inductance [μH]	Inductance tolerance	Self-resonant frequency [MHz] (min.)	DC Resistance [Ω] (±30%)	Rated current ※) [mA]				Measuring frequency [kHz]
							Saturation current: Idc1		Temperature rise current: Idc2		
							Max.	Typ.	Max.	Typ.	
LSXND6060WHL0R9NMG	NRS6028T 0R9NMGJ	RoHS	0.9	±30%	90	0.013	6,700	7,900	4,600	5,200	100
LSXND6060WHL1R5NMG	NRS6028T 1R5NMGJ	RoHS	1.5	±30%	78	0.016	5,100	6,100	4,200	4,700	100
LSXND6060WHL2R2NMG	NRS6028T 2R2NMGJ	RoHS	2.2	±30%	68	0.020	4,200	5,100	3,700	4,200	100
LSXND6060WHL3R0NMG	NRS6028T 3R0NMGJ	RoHS	3.0	±30%	55	0.023	3,600	4,300	3,400	3,900	100
LSXND6060WHL4R7MMG	NRS6028T 4R7MMGK	RoHS	4.7	±20%	39	0.031	2,700	3,300	3,000	3,400	100
LSXND6060WHL6R8MMG	NRS6028T 6R8MMGJ	RoHS	6.8	±20%	25	0.043	2,600	3,000	2,500	2,900	100
LSXND6060WHL100MMG	NRS6028T 100MMGK	RoHS	10	±20%	20	0.065	1,900	2,200	1,900	2,200	100
LSXND6060WHL150MMG	NRS6028T 150MMGJ	RoHS	15	±20%	17	0.095	1,600	1,900	1,800	1,900	100
LSXND6060WHL220MMG	NRS6028T 220MMGJ	RoHS	22	±20%	12	0.135	1,300	1,600	1,400	1,600	100
LSXND6060WHL330MMG	NRS6028T 330MMGJ	RoHS	33	±20%	10	0.220	1,100	1,300	1,100	1,250	100
LSXND6060WHL470MMG	NRS6028T 470MMGJ	RoHS	47	±20%	8	0.300	1,000	1,150	920	1,050	100
LSXND6060WHL680MMG	NRS6028T 680MMGJ	RoHS	68	±20%	5	0.420	800	950	770	880	100
LSXND6060WHL101MMG	NRS6028T 101MMGJ	RoHS	100	±20%	3	0.600	650	750	660	750	100

●6060YE type

New part number	Old part number (for reference)	EHS	Nominal inductance [μH]	Inductance tolerance	Self-resonant frequency [MHz] (min.)	DC Resistance [Ω] (±30%)	Rated current ※) [mA]				Measuring frequency [kHz]
							Saturation current: Idc1		Temperature rise current: Idc2		
							Max.	Typ.	Max.	Typ.	
LSXND6060YEL1R0NMG	NRS6045T 1R0NMGK	RoHS	1.0	±30%	110	0.014	9,800	11,000	4,500	5,200	100
LSXND6060YEL1R3NMG	NRS6045T 1R3NMGK	RoHS	1.3	±30%	95	0.016	8,200	9,300	4,200	4,800	100
LSXND6060YEL1R5NMG	NRS6045T 1R5NMGK	RoHS	1.5	±30%	95	0.016	8,200	9,300	4,200	4,800	100
LSXND6060YEL1R8NMG	NRS6045T 1R8NMGK	RoHS	1.8	±30%	80	0.019	7,200	8,100	3,900	4,400	100
LSXND6060YEL2R2NMG	NRS6045T 2R2NMGK	RoHS	2.2	±30%	60	0.022	6,400	7,300	3,600	4,100	100
LSXND6060YEL2R3NMG	NRS6045T 2R3NMGK	RoHS	2.3	±30%	60	0.022	6,400	7,300	3,600	4,100	100
LSXND6060YEL3R0NMG	NRS6045T 3R0NMGK	RoHS	3.0	±30%	45	0.024	5,600	6,500	3,300	4,000	100
LSXND6060YEL3R3NMG	NRS6045T 3R3NMGK	RoHS	3.3	±30%	45	0.024	5,600	6,500	3,300	4,000	100
LSXND6060YEL4R5MMG	NRS6045T 4R5MMGK	RoHS	4.5	±20%	25	0.030	4,400	5,400	3,100	3,600	100
LSXND6060YEL4R7NMG	NRS6045T 4R7NMGK	RoHS	4.7	±30%	25	0.030	4,400	5,400	3,100	3,600	100
LSXND6060YEL6R3MMG	NRS6045T 6R3MMGK	RoHS	6.3	±20%	15	0.036	3,600	4,300	3,000	3,300	100
LSXND6060YEL6R8MMG	NRS6045T 6R8MMGK	RoHS	6.8	±20%	15	0.036	3,600	4,300	3,000	3,300	100
LSXND6060YEL100MMG	NRS6045T 100MMGK	RoHS	10	±20%	12	0.046	3,100	3,600	2,400	2,800	100
LSXND6060YEL150MMG	NRS6045T 150MMGK	RoHS	15	±20%	10	0.070	2,500	3,000	1,900	2,300	100
LSXND6060YEL220MMG	NRS6045T 220MMGK	RoHS	22	±20%	7	0.107	2,000	2,400	1,600	1,900	100
LSXND6060YEL330MMG	NRS6045T 330MMGK	RoHS	33	±20%	6	0.141	1,650	2,000	1,400	1,600	100
LSXND6060YEL470MMG	NRS6045T 470MMGK	RoHS	47	±20%	5	0.211	1,400	1,600	1,150	1,350	100
LSXND6060YEL680MMG	NRS6045T 680MMGK	RoHS	68	±20%	4	0.304	1,100	1,300	950	1,100	100
LSXND6060YEL101MMG	NRS6045T 101MMGK	RoHS	100	±20%	3	0.466	900	1,200	750	900	100

※) The saturation current value (Idc1) is the DC current value having inductance decrease down to 30%. (at 20℃)
※) The temperature rise current value (Idc2) is the DC current value having temperature increase up to 40℃. (at 20℃)
※) The rated current is the DC current value that satisfies both of current value saturation current value and temperature rise current value.

■PART NUMBER

●8080XK type

New part number	Old part number (for reference)	EHS	Nominal inductance [μH]	Inductance tolerance	Self-resonant frequency [MHz] (min.)	DC Resistance [Ω] (±30%)	Rated current ※) [mA]				Measuring frequency [kHz]
							Saturation current: Idc1		Temperature rise current: Idc2		
							Max.	Typ.	Max.	Typ.	
LSXNH8080XKL1R0NJG	NRS8030T 1R0NJGJ	RoHS	1.0	±30%	120	0.009	7,800	9,300	6,200	7,600	100
LSXNH8080XKL1R5NJG	NRS8030T 1R5NJGJ	RoHS	1.5	±30%	80	0.012	6,200	7,800	5,300	6,400	100
LSXNH8080XKL2R2NJG	NRS8030T 2R2NJGJ	RoHS	2.2	±30%	60	0.015	4,900	6,100	4,800	5,600	100
LSXNH8080XKL3R3MJG	NRS8030T 3R3MJGJ	RoHS	3.3	±20%	50	0.019	4,200	5,200	4,300	5,100	100
LSXNH8080XKL4R7MJG	NRS8030T 4R7MJGJ	RoHS	4.7	±20%	40	0.022	3,600	4,400	4,000	4,700	100
LSXNH8080XKL6R8MJG	NRS8030T 6R8MJGJ	RoHS	6.8	±20%	32	0.029	3,000	3,600	3,400	4,000	100
LSXNH8080XKL100MJG	NRS8030T 100MJGJ	RoHS	10	±20%	27	0.033	2,400	2,900	3,000	3,600	100
LSXNH8080XKL150MJG	NRS8030T 150MJGJ	RoHS	15	±20%	20	0.060	2,000	2,300	2,200	2,600	100
LSXNH8080XKL220MJG	NRS8030T 220MJGJ	RoHS	22	±20%	16	0.070	1,750	2,200	1,900	2,300	100
LSXNH8080XKL330MJG	NRS8030T 330MJGJ	RoHS	33	±20%	13	0.120	1,300	1,600	1,500	1,800	100
LSXNH8080XKL470MJG	NRS8030T 470MJGJ	RoHS	47	±20%	11	0.170	1,100	1,400	1,300	1,500	100

●8080YB/8080YK type

New part number	Old part number (for reference)	EHS	Nominal inductance [μH]	Inductance tolerance	Self-resonant frequency [MHz] (min.)	DC Resistance [Ω] (±30%)	Rated current ※) [mA]				Measuring frequency [kHz]
							Saturation current: Idc1		Temperature rise current: Idc2		
							Max.	Typ.	Max.	Typ.	
LSXNH8080YBL0R9NJG	NRS8040T 0R9NJGJ	RoHS	0.9	±30%	85	0.006	13,000	14,000	7,800	9,600	100
LSXNH8080YBL1R0NJG	NRS8040T 1R0NJGJ	RoHS	1	±30%	85	0.006	13,000	14,000	7,800	9,600	100
LSXNH8080YBL1R4NJG	NRS8040T 1R4NJGJ	RoHS	1.4	±30%	63	0.007	10,000	11,000	7,000	8,400	100
LSXNH8080YBL1R5NJG	NRS8040T 1R5NJGJ	RoHS	1.5	±30%	63	0.007	10,000	11,000	7,000	8,400	100
LSXNH8080YBL2R0NJG	NRS8040T 2R0NJGJ	RoHS	2.0	±30%	50	0.009	8,100	9,200	6,300	7,600	100
LSXNH8080YBL2R2NJG	NRS8040T 2R2NJGJ	RoHS	2.2	±30%	50	0.009	8,100	9,200	6,300	7,600	100
LSXNH8080YBL3R3NJG	NRS8040T 3R3NJGJ	RoHS	3.3	±30%	34	0.015	6,400	6,800	4,900	6,000	100
LSXNH8080YBL3R6NJG	NRS8040T 3R6NJGJ	RoHS	3.6	±30%	34	0.015	6,400	6,800	4,900	6,000	100
LSXNH8080YBL4R7NJG	NRS8040T 4R7NJGJ	RoHS	4.7	±30%	30	0.018	5,400	5,900	4,100	5,200	100
LSXNH8080YBL6R8NJG	NRS8040T 6R8NJGJ	RoHS	6.8	±30%	24	0.025	4,400	4,800	3,700	4,400	100
LSXNH8080YKL100MJG	NRS8040T 100MJGJ	RoHS	10	±20%	22	0.034	3,800	4,100	3,100	3,500	100
LSXNH8080YKL150MJG	NRS8040T 150MJGJ	RoHS	15	±20%	16	0.050	2,900	3,200	2,400	3,000	100
LSXNH8080YKL220MJG	NRS8040T 220MJGJ	RoHS	22	±20%	13	0.066	2,400	2,700	2,200	2,600	100
LSXNH8080YKL330MJG	NRS8040T 330MJGK	RoHS	33	±20%	12	0.100	2,000	2,300	1,700	1,900	100
LSXNH8080YKL470MJG	NRS8040T 470MJGK	RoHS	47	±20%	8	0.140	1,500	1,800	1,500	1,600	100
LSXNH8080YKL680MJG	NRS8040T 680MJGK	RoHS	68	±20%	7	0.210	1,300	1,500	1,200	1,300	100
LSXNH8080YKL101MJG	NRS8040T 101MJGK	RoHS	100	±20%	6	0.280	1,100	1,300	1,000	1,100	100
LSXNH8080YKL151MJG	NRS8040T 151MJGK	RoHS	150	±20%	5	0.420	900	980	800	890	100
LSXNH8080YKL221MJG	NRS8040T 221MJGK	RoHS	220	±20%	4	0.620	700	800	670	740	100

※) The saturation current value (Idc1) is the DC current value having inductance decrease down to 30%. (at 20℃)
※) The temperature rise current value (Idc2) is the DC current value having temperature increase up to 40℃. (at 20℃)
※) The rated current is the DC current value that satisfies both of current value saturation current value and temperature rise current value.

Wire-wound Ferrite Power Inductors LSXN/LSXP/LCXN/LCXP/LBXN/LBXP/ LLXN/LLXP/LMXN/LMXP series
Wire-wound Ferrite Power Inductors LAXH/LCXH/LBXH/LMXH series
Wire-wound Ferrite Inductors for Class D Amplifier LCXA

■PACKAGING

①Minimum Quantity

Type	Standard Quantity [pcs]
	Tape & Reel
2020KK	2500
2020MK	2500
2424KK	2500
2424MK	2500
3030KK	2000
3030MK	2000
3030QK	2000
4040KK	5000
4040MK	4500
4040TK	3500
4040WK	700

Type	Standard Quantity [pcs]
	Tape & Reel
5050KK	1000
5050MK	1000
5050PK	1000
5050WB	800
5050WK	800
5050WD 5050WE	2500
5050XK 5050XA	500
5050YA 5050YK	1500
6060KK	1000
6060MK	1000
6060PK	1000
6060WK	2500
6060WH	2000
6060XK	2000
6060YE	1500
8080XK	1000
8080YK 8080YB	1000

②Tape Material

●Embossed Tape

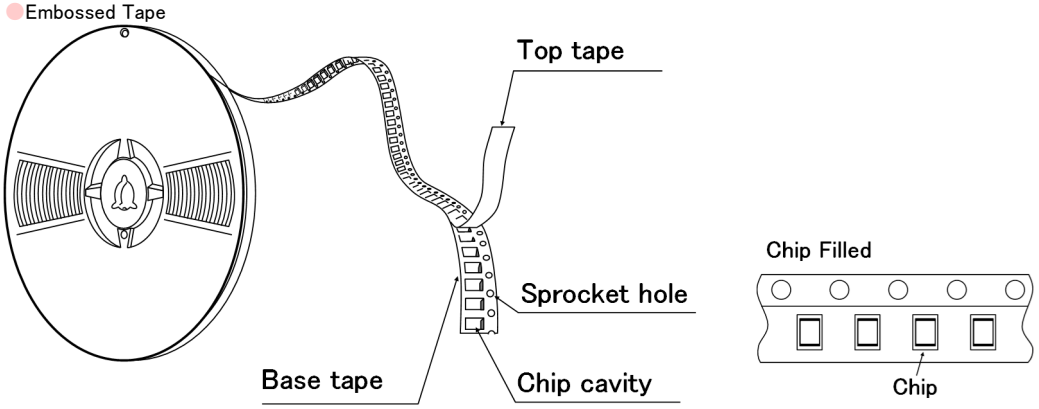

③Taping dimensions

●Embossed tape 8mm wide (0.315 inches wide)

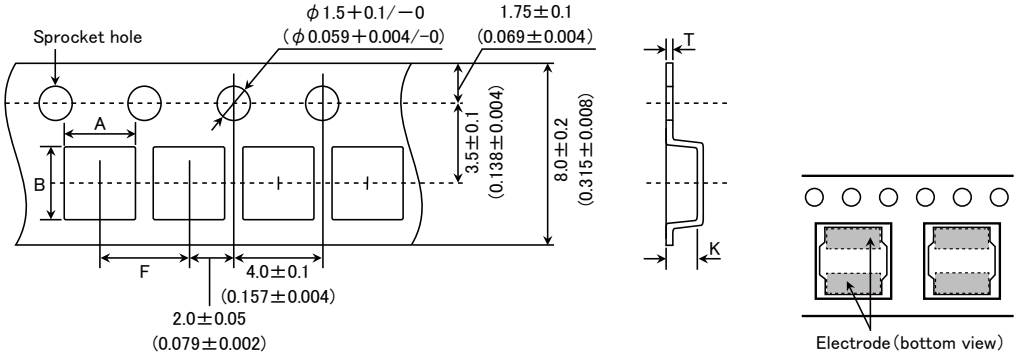

▸ This catalog contains the typical specification only due to the limitation of space. When you consider the purchase of our products, please check our specification.
For details of each product (characteristics graph, reliability information, precautions for use, and so on), see our Web site (http://www.ty-top.com/) .

Type	Chip cavity		Insertion pitch	Tape thickness	
	A	B	F	T	K
2020KK 2020MK	2.2±0.1 (0.102±0.004)	2.2±0.1 (0.102±0.004)	4.0±0.1 (0.157±0.004)	0.25±0.05 (0.009±0.002)	1.3±0.1 (0.051±0.004)
2424KK 2424MK	2.6±0.1 (0.087±0.004)	2.6±0.1 (0.102±0.004)		0.25±0.05 (0.009±0.002)	1.3±0.1 (0.051±0.004)
3030KK	3.2±0.1 (0.126±0.004)	3.2±0.1 (0.126±0.004)		0.3±0.05 (0.012±0.002)	1.4±0.1 (0.055±0.004)
3030MK					1.6±0.1 (0.063±0.004)
3030QK					1.9±0.1 (0.075±0.004)

Unit : mm (inch)

Embossed tape 12mm wide (0.47 inches wide)

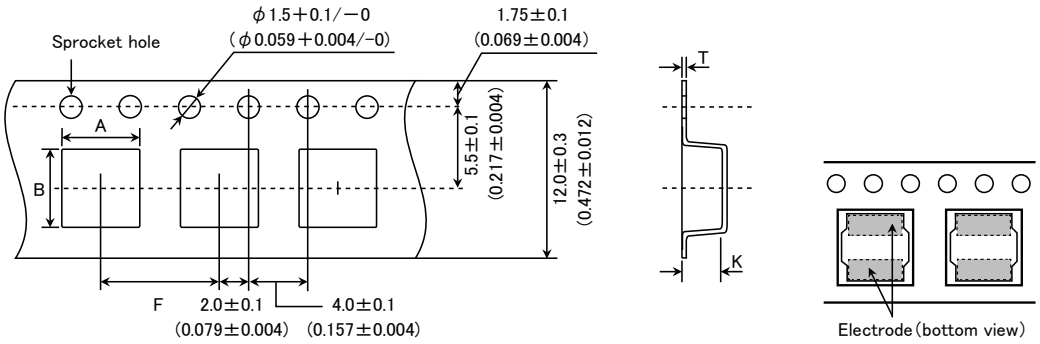

Type	Chip cavity		Insertion pitch	Tape thickness	
	A	B	F	T	K
4040KK	4.3±0.1 (0.169±0.004)	4.3±0.1 (0.169±0.004)	8.0±0.1 (0.315±0.004)	0.3±0.1 (0.012±0.004)	1.4±0.1 (0.055±0.004)
4040MK					1.6±0.1 (0.063±0.004)
4040TK 4040WK					2.1±0.1 (0.083±0.004)
5050KK	5.25±0.1 (0.207±0.004)	5.25±0.1 (0.207±0.004)			1.4±0.1 (0.055±0.004)
5050MK					1.4±0.1 (0.055±0.004)
5050PK					1.6±0.1 (0.063±0.004)
5050WB 5050WK					2.3±0.1 (0.091±0.004)
5050WD 5050WE					2.7±0.1 (0.106±0.004)
5050XK 5050XA	5.15±0.1 (0.203±0.004)	5.15±0.1 (0.203±0.004)		0.4±0.1 (0.016±0.004)	3.2±0.1 (0.126±0.004)
5050YK 5050YA	5.15±0.1 (0.203±0.004)	5.15±0.1 (0.203±0.004)			4.2±0.1 (0.165±0.004)
6060KK	6.3±0.1 (0.248±0.004)	6.3±0.1 (0.248±0.004)			1.4±0.1 (0.055±0.004)
6060MK					1.6±0.1 (0.063±0.004)
6060PK					1.6±0.1 (0.063±0.004)
6060WK					2.3±0.1 (0.090±0.004)
6060WH 6060XK					3.1±0.1 (0.122±0.004)
6060YE					4.7±0.1 (0.185±0.004)

Unit : mm (inch)

Embossed tape 16mm wide (0.63 inches wide)

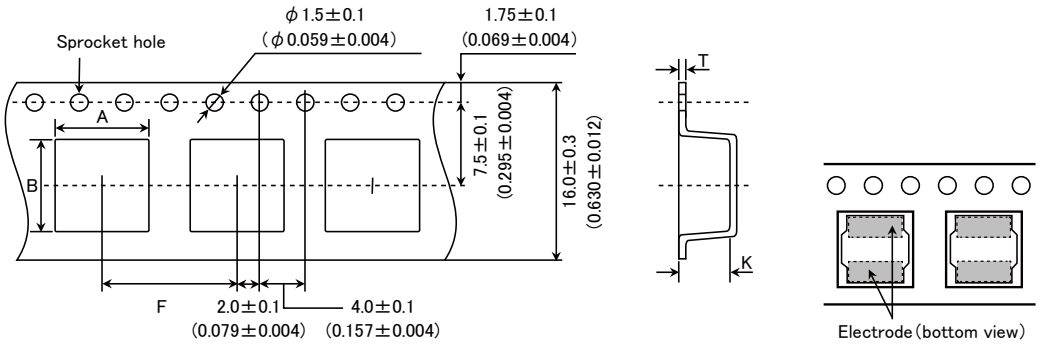

Type	Chip cavity		Insertion pitch	Tape thickness	
	A	B	F	T	K
8080XK	8.3±0.1 (0.327±0.004)	8.3±0.1 (0.327±0.004)	12.0±0.1 (0.472±0.004)	0.5±0.1 (0.020±0.004)	3.4±0.1 (0.134±0.004)
8080YK 8080YB					4.5±0.1 (0.177±0.004)

Unit : mm (inch)

④Leader and Blank portion

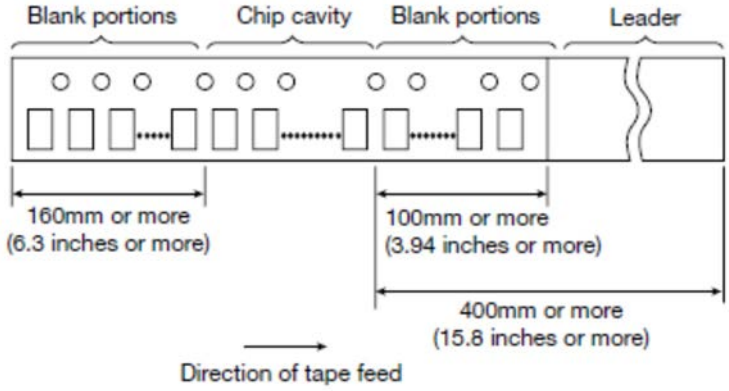

⑤Reel size

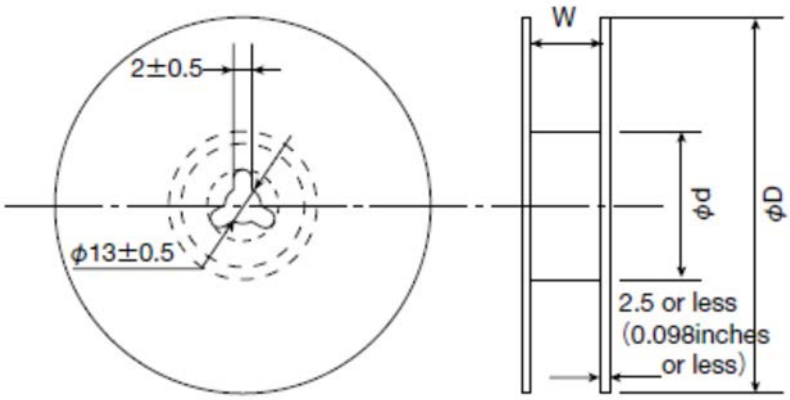

Type	Reel size (Reference values)		
	ϕD	ϕd	W
2020KK	180±0.5 (7.087±0.019)	60±1.0 (2.36±0.04)	10.0±1.5 (0.394±0.059)
2020MK			
2424KK			
2424MK			
3030KK			
3030MK			
3030QK			
4040WK	180±3.0 (7.087±0.118)	60±2.0 (2.36±0.08)	14.0±1.5 (0.551±0.059)
5050KK			
5050MK			
5050PK			
5050WB			
5050WK			
5050XK			
5050XA			
6060KK			
6060MK			
6060PK			

Unit : mm (inch)

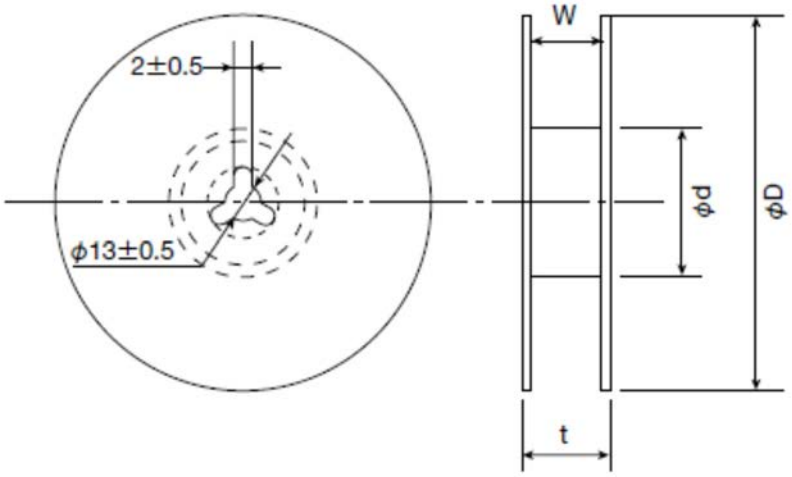

Type	Reel size (Reference values)			
	ϕD	ϕd	t (max.)	W
4040KK	330±3.0 (12.99±0.118)	80±2.0 (3.15±0.078)	18.5 (0.72)	13.5±1.0 (0.531±0.04)
4040MK				
4040TK				
5050WD				
5050WE				
5050YA				
5050YK				
6060WK				
6060WH				
6060XK				
6060YE				
8080XK			22.5 (0.89)	17.5±1.0 (0.689±0.04)
8080YK				
8080YB				

Unit : mm (inch)

⑥Top Tape Strength

The top tape requires a peel-off force of 0.1 to 1.3N in the direction of the arrow as illustrated below.

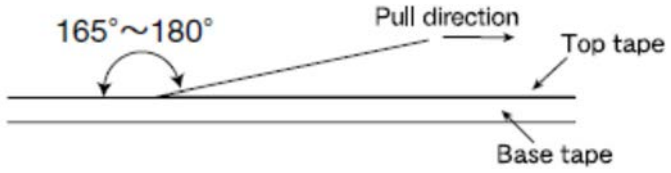

Wire-wound Ferrite Power Inductors LSXN/LSXP series
for General Electronic Equipment for Consumer
Wire-wound Ferrite Power Inductors LLXN/LLXP series
for Medical Devices classified as GHTF Classes A or B (Japan Classes I or II)

■RELIABILITY DATA

1. Operating Temperature Range	
Specified Value	−25～＋120℃ (LSXN:2020～3030 type, LSXP:2020～3030 type) −25～＋125℃ (LSXN:4040～8080 type) −25～＋120℃ (LLXN:2020～3030 type, LLXP:2020～3030 type) −25～＋125℃ (LLXN:4040～8080 type)
Test Methods and Remarks	Including self-generated heat

2. Storage Temperature Range	
Specified Value	−40～＋85℃
Test Methods and Remarks	−5 to 40℃ for the product with taping.

3. Rated current	
Specified Value	Within the specified tolerance

4. Inductance	
Specified Value	Within the specified tolerance
Test Methods and Remarks	Measuring equipment : LCR Meter (HP 4285A or equivalent) Measuring frequency : 100kHz, 1V

5. DC Resistance	
Specified Value	Within the specified tolerance
Test Methods and Remarks	Measuring equipment : DC ohmmeter (HIOKI 3227 or equivalent)

6. Self resonance frequency	
Specified Value	Within the specified tolerance
Test Methods and Remarks	Measuring equipment : Impedance analyzer/material analyzer(HP4291A or equivalent HP4191A, 4192A or equivalent)

7. Temperature characteristic	
Specified Value	Inductance change : Within ±20%
Test Methods and Remarks	Measurement of inductance shall be taken at temperature range within −25℃～＋85℃. With reference to inductance value at ＋20℃., change rate shall be calculated. Change of maximum inductance deviation in step 1 to 5

Step	Temperature(℃)
1	20
2	Minimum operating temperature
3	20 (Standard temperature)
4	Maximum operating temperature
5	20

8. Resistance to flexure of substrate

Specified Value	No damage
Test Methods and Remarks	The test samples shall be soldered to the test board by the reflow. As illustrated below, apply force in the direction of the arrow indicating until deflection of the test board reaches to 2 mm. Test board size : 100×40×1.0 Test board material : Glass epoxy-resin Solder cream thickness : 0.10mm (2020～3030 type) : 0.15mm (4040～8080 type)

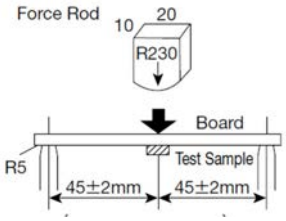

Land dimension

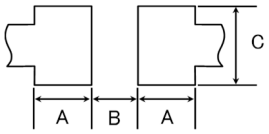

Type	A	B	C
2020	0.65	0.7	2.0
2424	0.7	0.75	2.0
3030	0.8	1.4	2.7
4040	1.2	1.6	3.7
5050	1.5	2.1	4.0
6060	1.6	3.1	5.7
8080	1.8	3.8	7.5

9. Insulation resistance : between wires

Specified Value	—

10. Insulation resistance : between wire and core

Specified Value	—

11. Withstanding voltage : between wire and core

Specified Value	—

12. Adhesion of terminal electrode

Specified Value	Shall not come off PC board
Test Methods and Remarks	The test samples shall be soldered to the test board by the reflow. Applied force : 10N to X and Y directions. Duration : 5s. Solder cream thickness : 0.10mm (2020～3030 type) : 0.15mm (4040～8080 type)

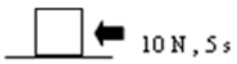

13. Resistance to vibration

Specified Value	Inductance change : Within ±10% No significant abnormality in appearance.
Test Methods and Remarks	The test samples shall be soldered to the test board by the reflow. Then it shall be submitted to below test conditions.

Frequency Range	10～55Hz	
Total Amplitude	1.5mm (May not exceed acceleration 196m/s^2)	
Sweeping Method	10Hz to 55Hz to 10Hz for 1min.	
Time	X	For 2 hours on each X, Y, and Z axis.
	Y	
	Z	

Recovery : At least 2hrs of recovery under the standard condition after the test, followed by the measurement within 48hrs.

14. Solderability

Specified Value	At least 90% of surface of terminal electrode is covered by new solder.
Test Methods and Remarks	The test samples shall be dipped in flux, and then immersed in molten solder as shown in below table. Flux : Ethanol solution containing rosin 25%. Solder Temperature: 245±5℃ Time: 5±1.0 sec. ※Immersion depth : All sides of mounting terminal shall be immersed.

15. Resistance to soldering heat

Specified Value	Inductance change : Within ±10% No significant abnormality in appearance.
Test Methods and Remarks	The test sample shall be exposed to reflow oven at 230±5℃ for 40 seconds, with peak temperature at 260±5℃ for 5 seconds, 2 times. Test board material : Glass epoxy-resin Test board thickness : 1.0mm

16. Thermal shock

Specified Value	Inductance change : Within ±10% No significant abnormality in appearance.
Test Methods and Remarks	The test samples shall be soldered to the test board by the reflow. The test samples shall be placed at specified temperature for specified time by step 1 to step 4 as shown in below table in sequence. The temperature cycle shall be repeated 100 cycles.

Conditions of 1 cycle		
Step	Temperature (℃)	Duration (min)
1	−40±3	30±3
2	Room temperature	Within 3
3	+85±2	30±3
4	Room temperature	Within 3

Recovery : At least 2hrs of recovery under the standard condition after the test, followed by the measurement within 48hrs.

17. Damp heat

Specified Value	Inductance change : Within ±10% No significant abnormality in appearance.
Test Methods and Remarks	The test samples shall be soldered to the test board by the reflow. The test samples shall be placed in thermostatic oven set at specified temperature and humidity as shown in below table. Temperature: 60±2℃ Humidity: 90～95%RH Time: 500+24/−0 hour Recovery : At least 2hrs of recovery under the standard condition after the test, followed by the measurement within 48hrs.

18. Loading under damp heat

Specified Value	Inductance change : Within ±10% No significant abnormality in appearance.
Test Methods and Remarks	The test samples shall be soldered to the test board by the reflow. The test samples shall be placed in thermostatic oven set at specified temperature and humidity and applied the rated current continuously as shown in below table. Temperature: 60±2℃ Humidity: 90～95%RH Applied current: Rated current Time: 500+24/−0 hour Recovery : At least 2hrs of recovery under the standard condition after the test, followed by the measurement within 48hrs.

19. Low temperature life test

Specified Value	Inductance change : Within ±10% No significant abnormality in appearance.
Test Methods and Remarks	The test samples shall be soldered to the test board by the reflow. After that, the test samples shall be placed at test conditions as shown in below table. Temperature: −40±2℃ Time: 500+24/−0 hour Recovery : At least 2hrs of recovery under the standard condition after the test, followed by the measurement within 48hrs.

20. High temperature life test	
Specified Value	—

21. Loading at high temperature life test	
Specified Value	Inductance change : Within ±10% No significant abnormality in appearance.
Test Methods and Remarks	The test samples shall be soldered to the test board by the reflow soldering. Temperature: 85±2℃ Applied current: Rated current Time: 500+24/−0 hour Recovery : At least 2hrs of recovery under the standard condition after the test, followed by the measurement within 48hrs.

22. Standard condition	
Specified Value	Standard test condition : Unless otherwise specified, temperature is 20±15℃ and 65±20%of relative humidity. When there is any question concerning measurement result: In order to provide correlation data, the test shall be condition of 20±2℃ of temperature, 65±5% relative humidity. Inductance is in accordance with our measured value.

Wire-wound Ferrite Power Inductors LSXN/LSXP series for General Electronic Equipment for Consumer
Wire-wound Ferrite Power Inductors LSXBH10050 for General Electronic Equipment for Consumer
Wire-wound Ferrite Power Inductors LSRN series for General Electronic Equipment for Consumer
Wire-wound Ferrite Power Inductors LLXN/LLXP series for Medical Devices classified as GHTF Classes A or B (Japan Classes I or II)
Wire-wound Ferrite Power Inductors LLXBH10050 for Medical Devices classified as GHTF Classes A or B (Japan Classes I or II)
Wire-wound Ferrite Power Inductors LLRN series for Medical Devices classified as GHTF Classes A or B (Japan Classes I or II)

■PRECAUTIONS

1. Circuit Design	
Precautions	◆Verification of operating environment, electrical rating and performance 1. A malfunction in medical equipment, spacecraft, nuclear reactors, etc. may cause serious harm to human life or have severe social ramifications. As such, any inductors to be used in such equipment may require higher safety and/or reliability considerations and should be clearly differentiated from components used in general purpose applications. 2. When inductors are used in places where dew condensation develops and/or where corrosive gas such as hydrogen sulfide, sulfurous acid, or chlorine exists in the air, characteristic deterioration may occur. Please do not use inductors under such environmental conditions. ◆Operating Current (Verification of Rated current) 1. The operating current including inrush current for inductors must always be lower than their rated values. 2. Do not apply current in excess of the rated value because the inductance may be reduced due to the magnetic saturation effect. ◆Temperature rise Temperature rise of power choke coil depends on the installation condition in end products. Make sure that temperature rise of power choke coils in actual end products is within the specified temperature range.

2. PCB Design	
Precautions	◆Land pattern design 1. Please refer to a recommended land pattern. 2. There is stress, which has been caused by distortion of a PCB, to the inductor. (LSXN/LSXP/LLXN/LLXP) 3. Please consider the arrangement of parts on a PCB. (LSXN/LSXP/LLXN/LLXP)
Technical considerations	◆Land pattern design Surface Mounting 1. Mounting and soldering conditions should be checked beforehand. 2. Applicable soldering process to this products is reflow soldering only. 3. Please use the recommended land pattern shown as below. Electrical characteristics and the mounting ability of the product are being considered in the recommended land pattern. If a PCB is designed with other dimensions, defective soldering and stress to a product may occur due to misalignment. The performance of the product may not be brought out. If an adopted land pattern is different from the recommended land pattern, stress to the product will increase. It may cause cracks or defective electrical characteristics of the product. Please conduct validation completely before studying adoption of this product and please judge the pros and cons of adoption of this product with taking on responsibility. (LSXN/LSXP/LLXN/LLXP) 4. As coefficients of thermal expansion between an inductor and a PCB differs, cracks may occur on a ferrite core when thermal stress is applied to them after mounting an inductor. (Please refer to the drawings below.) Please conduct validation completely before studying adoption of this product and please judge the pros and cons of adoption of this product with taking on responsibility. (LSXN/LSXP/LLXN/LLXP) 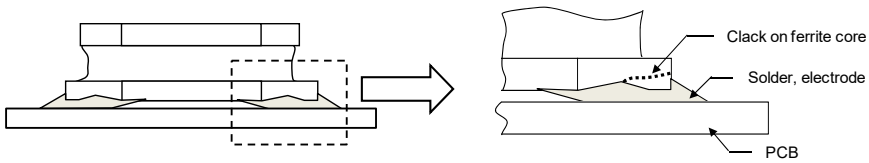

	5. SMD inductors should be located to minimize any possible mechanical stresses from board warp or deflection. When splitting the PC board after mounting inductors and other components, care is required so as not to give any stresses of deflection or twisting to the board. (LSXN/LSXP/LLXN/LLXP) 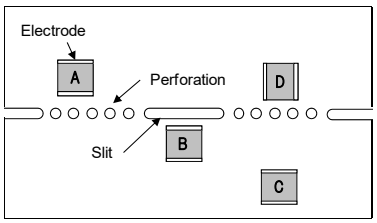 A product tends to undergo stress in order "A>C>B≡D". Please consider the layouts of a product to minimize any stresses.

3. Considerations for automatic placement	
Precautions	◆Adjustment of mounting machine 1. Excessive impact load should not be imposed on the products when mounting onto the PC boards. 2. Mounting and soldering conditions should be checked beforehand.
Technical considerations	◆Adjustment of mounting machine 1. When installing products, care should be taken not to apply distortion stress as it may deform the products. 2. Stress may be applied to a product with a warp or a twist in handling of the product. Please conduct validation completely before studying adoption of this product and please judge the pros and cons of adoption of this product with taking on responsibility. (LSXN/LSXP/LLXN/LLXP) 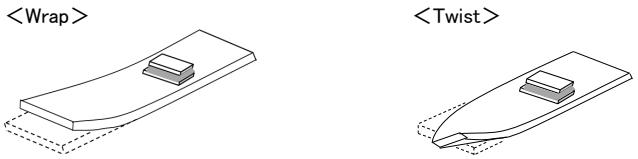

4. Soldering	
Precautions	◆Reflow soldering 1. Please contact any of our offices for a reflow soldering, and refer to the recommended condition specified. 2. The product shall be used reflow soldering only. 3. Please do not add any stress to a product until it returns in normal temperature after reflow soldering. ◆Lead free soldering 1. When using products with lead free soldering, we request to use them after confirming adhesion, temperature of resistance to soldering heat, soldering etc sufficiently. ◆Recommended conditions for using a soldering iron (Repair) ・ Put the soldering iron on the land-pattern. ・ Soldering iron's temperature – Below 350℃ ・ Duration – 3 seconds or less ・ The soldering iron should not directly touch the inductor.
Technical considerations	◆Reflow soldering 1. If products are used beyond the range of the recommended conditions, heat stresses may deform the products, and consequently degrade the reliability of the products. Recommended reflow condition (Pb free solder) 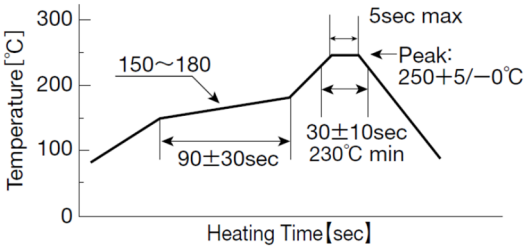

5. Cleaning	
Precautions	◆Cleaning conditions 1. Washing by supersonic waves shall be avoided.
Technical considerations	◆Cleaning conditions 1. If washed by supersonic waves, the products might be broken.

6. Handling	
Precautions	◆Handling 1. Keep the product away from all magnets and magnetic objects. ◆Breakaway PC boards (splitting along perforations) 1. When splitting the PC board after mounting product, care should be taken not to give any stresses of deflection or twisting to the board. 2. Board separation should not be done manually, but by using the appropriate devices. ◆Mechanical considerations 1. Please do not give the product any excessive mechanical shocks. 2. Please do not add any shock and power to a product in transportation. ◆Pick-up pressure 1. Please do not push to add any pressure to a winding part. Please do not give any shock and push into a ferrite core exposure part. ◆Packing 1. Please avoid accumulation of a packing box as much as possible.
Technical considerations	◆Handling 1. There is a case that a characteristic varies with magnetic influence. ◆Breakaway PC boards (splitting along perforations) 1. The position of the product on PCBs shall be carefully considered to minimize the stress caused from splitting of the PCBs. ◆Mechanical considerations 1. There is a case to be damaged by a mechanical shock. 2. There is a case to be broken by the handling in transportation. ◆Pick-up pressure 1. Damage and a characteristic can vary with an excessive shock or stress. ◆Packing 1. If packing boxes are accumulated, that could cause a deformation on packing tapes or a damage on the products.

7. Storage conditions	
Precautions	◆Storage 1. To maintain the solderability of terminal electrodes and to keep the packing material in good condition, temperature and humidity in the storage area should be controlled. ・ Storage conditions Ambient temperature : －5～40℃ Humidity : Below 70% RH ・ The recommended ambient temperature is below 30℃. Even under ideal storage conditions, solderability of products electrodes may decrease as time passes. For this reason, product should be used within 6 months from the time of delivery. In case of storage over 6 months, solderability shall be checked before actual usage.
Technical considerations	◆Storage 1. Under a high temperature and humidity environment, problems such as reduced solderability caused by oxidation of terminal electrodes and deterioration of taping/packaging materials may take place.