Spec Sheet

Leaded Common Mode Choke Coils for AC Lines

TLF14CB3321R0K1

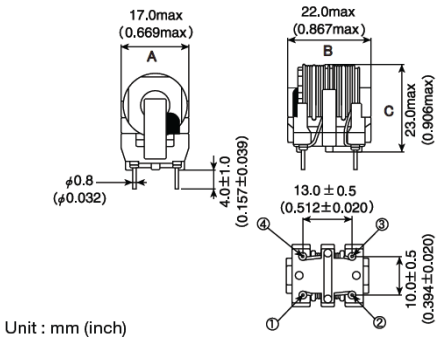

Unit : mm (inch)

Features

- Item Summary

  3300 uH, 1 A, 17.0x22.0x23mm

- Lifecycle Stage

  Discontinued

- Standard packaging quantity (minimum)

  Bulk 500pcs

Products characteristics table

Common Mode Inductance	3300 uH min
Case Size (mm)	17.0x22.0
DC Resistance (max)	0.32 Ω
Rated Current (max)	1 A
Rated Voltage (max)	AC250 V
Operating Temp. Range	-25 to +105 ℃ (Including-self-generated heat)
Insulation Resistance (min)	100 MΩ
RoHS Compliance (10 subst.)	Yes
Soldering	Wave

External Dimensions

Dimension A	Max 17.0 mm
Dimension B	Max 22.0 mm
Dimension C	Max 23.0 mm

2024.08.19

The data is reference only. Electrical characteristics vary depending on environment or measurement condition.
TAIYO YUDEN reserves the right to make change to the data at any time without notice.
Before making final selection, please check product specification.

■ Notice for TAIYO YUDEN Products

Please read this notice before using the TAIYO YUDEN products.

⚠ REMINDERS

■ **Approval of Product Specifications**

Please contact TAIYO YUDEN for further details of product specifications as the individual product specification sheets are available. When using our products, please be sure to approve our product specifications or make a written agreement on the product specification with TAIYO YUDEN in advance. Please note that TAIYO YUDEN shall not be in any way responsible for any damages and defects in products or equipment incorporating our products, which are caused under the conditions other than those specified in individual product specification sheets.

■ **Pre-Evaluation in the Actual Equipment and Conditions**

Please conduct validation and verification of our products in actual conditions of mounting and operating environment before using our products.

■ **Limited Application**

1. Equipment Intended for Use

Our products are intended for general-purpose and standard use in general electronic equipment for consumer (e.g., AV equipment, OA equipment, home electric appliances, office equipment, information and communication equipment including, without limitation, mobile phone, and PC) and other equipment specified in the product catalog or the individual product specification sheets, or the equipment approved separately by TAIYO YUDEN.
TAIYO YUDEN has the product series intended for use in the following equipment. Therefore, when using our products for these equipment, please check available applications specified in the product catalog or the individual product specification sheets and use the corresponding products.

Application	Product Series		Quality Grade *3
	Equipment *1	Category (Part Number Code *2)	
Automotive	Automotive Electronic Equipment (POWERTRAIN, SAFETY)	A	1
	Automotive Electronic Equipment (BODY & CHASSIS, INFOTAINMENT)	C	2
Industrial	Telecommunications Infrastructure and Industrial Equipment	B	2
Medical	Medical Devices classified as GHTF Class C (Japan Class III)	M	2
	Medical Devices classified as GHTF Classes A or B (Japan Classes I or II)	L	3
Consumer	General Electronic Equipment	S	3
	Only for Mobile Devices *4	E	4

*Notes:
1. Based on the general specifications required for electronic components for such equipment, which are recognized by TAIYO YUDEN, the use of each product series for the equipment is recommended. Please be sure to contact TAIYO YUDEN before using our products for equipment other than those covered by the product series.
2. On each of our part number, the 2nd code from the left is a code indicating the "Category" as shown in the above table. For details, please check the explanatory materials regarding the part numbering system of each of our products.
3. Each product series is assigned a "Quality Grade" from 1 to 4 in order of higher quality. Please do not incorporate a product into any equipment with a higher Quality Grade than the Quality Grade of such product without the prior written consent of TAIYO YUDEN.
4. The applications covered by this product series are limited to mobile devices (smartphone, tablet PC, smartwatch, handheld game console, etc.) among general electronic equipment for consumer. The design, specifications and operating environment, etc. differ from those of the product series for "General Electronic Equipment" (Category: S), so please check the individual product specification sheets for details. The product series for "General Electronic Equipment" (Category: S) can also be used for mobile devices.

2. Equipment Requiring Inquiry

Please be sure to contact TAIYO YUDEN for further information before using our products for the following equipment (excluding intended equipment as specified in the product catalog or the individual product specification sheets) which may cause loss of human life, bodily injury, serious property damage and/or serious public impact due to a failure or defect of the products and/or malfunction attributed thereto.
(1) Transportation equipment (automotive powertrain control system, train control system, and ship control system, etc.)
(2) Traffic signal equipment
(3) Disaster prevention equipment, crime prevention equipment
(4) Medical devices classified as GHTF Class C (Japan Class III)
(5) Highly public information network equipment, data-processing equipment (telephone exchange, and base station, etc.)
(6) Any other equipment requiring high levels of quality and/or reliability equal to the equipment listed above

3. Equipment Prohibited for Use

Please do not incorporate our products into the following equipment requiring extremely high levels of safety and/or reliability.
(1) Aerospace equipment (artificial satellite, rocket, etc.)
(2) Aviation equipment *1
(3) Medical devices classified as GHTF Class D (Japan Class IV), implantable medical devices *2
(4) Power generation control equipment (nuclear power, hydroelectric power, thermal power plant control system, etc.)
(5) Undersea equipment (submarine repeating equipment, etc.)
(6) Military equipment
(7) Any other equipment requiring extremely high levels of safety and/or reliability equal to the equipment listed above

*Notes:
1. There is a possibility that our products can be used only for aviation equipment that does not directly affect the safe operation of aircraft (e.g., in-flight entertainment, cabin light, electric seat, cooking equipment) if such use meets requirements specified separately by TAIYO YUDEN. Please be sure to contact TAIYO YUDEN for further information before using our products for such aviation equipment.
2. Implantable medical devices contain not only internal unit which is implanted in a body, but also external unit which is connected to the internal unit.

4. Limitation of Liability

Please note that unless you obtain prior written consent of TAIYO YUDEN, TAIYO YUDEN shall not be in any way responsible for any damages incurred by you or third parties arising from use of our products for any equipment that is not intended for use by TAIYO YUDEN, or any equipment requiring inquiry to TAIYO YUDEN or prohibited for use by TAIYO YUDEN as described above.

■ **Safety Design**

When using our products for high safety and/or reliability-required equipment or circuits, please fully perform safety and/or reliability evaluation. In addition, please install (i) systems equipped with a protection circuit and a protection device and/or (ii) systems equipped with a redundant circuit or other system to prevent an unsafe status in the event of a single fault for a failsafe design to ensure safety.

■ **Intellectual Property Rights**

Information contained in this spec sheet is intended to convey examples of typical performances and/or applications of our products and is not intended to make any warranty with respect to the intellectual property rights or any other related rights of TAIYO YUDEN or any third parties nor grant any license under such rights.

■ **Limited Warranty**

Please note that the scope of warranty for our products is limited to the delivered our products themselves conforming to the product specifications specified in the individual product specification sheets, and TAIYO YUDEN shall not be in any way responsible for any damages resulting from a failure or defect in our products. Notwithstanding the foregoing, if there is a written agreement (e.g., supply and purchase agreement, quality assurance agreement) signed by TAIYO YUDEN and your company, TAIYO YUDEN will warrant our products in accordance with such agreement, provided, however, that our products shall be used for general-purpose and standard use in the equipment specified in the product catalog or the individual product specification sheets.

■ **TAIYO YUDEN's Official Sales Channel**

The contents of this spec sheet are applicable to our products which are purchased from our sales offices or authorized distributors (hereinafter "TAIYO YUDEN's official sales channel"). Please note that the contents of this spec sheet are not applicable to our products purchased from any seller other than TAIYO YUDEN's official sales channel.

■ **Caution for Export**

Some of our products may require specific procedures for export according to "U.S. Export Administration Regulations", "Foreign Exchange and Foreign Trade Control Law" of Japan, and other applicable regulations. Should you have any questions on this matter, please contact our sales staff.