REV. Status
REVISION – 07/24/96 TS
REVISION A REFORMATTED 08/22/96 TS
REVISION B REFORMATTED 07/15/97 TS
REVISION C CHANGED A.7. 08/20/99 TS
REVISION D ADDED RoHS 01/12/06 MP
REVISION E SAFETY UPDATED. FUSE INFO ADDED. 6–22–09 MP
REVISION F UPDATED TABLE 11–22–19 MP

THREE FLANGE SINGLE PRIMARY 2.4VA PC BOARD POWER TRANSFORMER

MODEL NUMBER
3FS-3XX & PSS3-XX

A. Electrical Specifications (@ 25°C)

1. Maximum Power: 2.4 VA
2. Input Voltage and Frequency: 115V 50/60 Hz
3. Secondary Voltage: See Table A
4. Voltage Regulation: 24% TYP @ full load to no load
5. Temperature Rise: 35°C TYP (45°C MAX allowed)
6. Insulation Resistance:
   100 MΩ MIN @ 500VDC, Pri to Sec, Pri to Core
   100 MΩ MIN @ 500VDC, Sec to Core
7. Hi–Pot: 2500 Vrms 1 minute @ Pri to Sec
   1500 Vrms 1 minute @ Pri to Core
   1500 Vrms 1 minute @ Sec to Core
   500 Vrms 1 minute @ Sec to Sec

B. Marking: TAMURA, Tamura part number (see sheet 2), MICROTRAN, Microtran part number (see sheet 2), date code, country of origin, safety logos and input and output ratings.

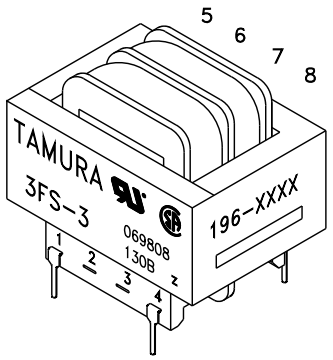

C. Safety:
Insulation Class B (130°C) File No. E92957.
CSA 22.2 No. 66–1988, File No. 069808.
UL 1585, File No. E95844.
Class 2 or 3, Noninherently limited.
UL 506, General Purpose, File No. E91239.

D. Mechanical Specifications:

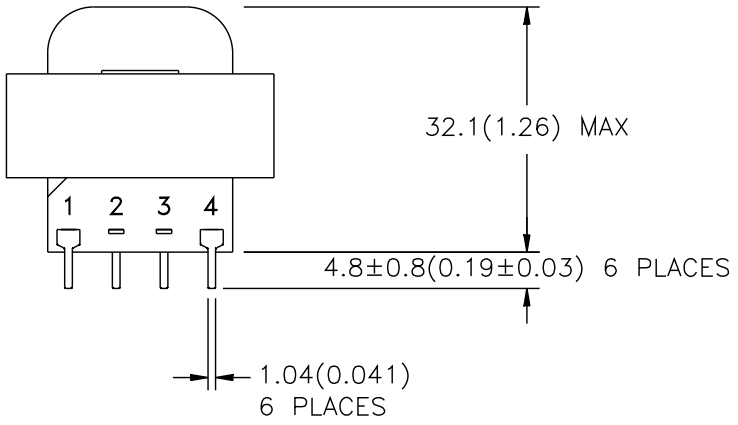

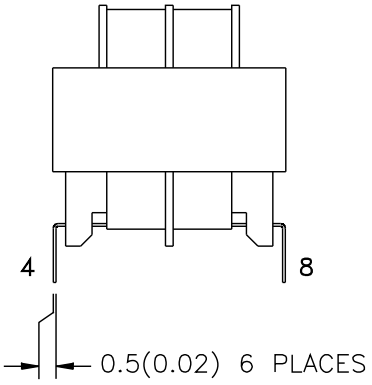

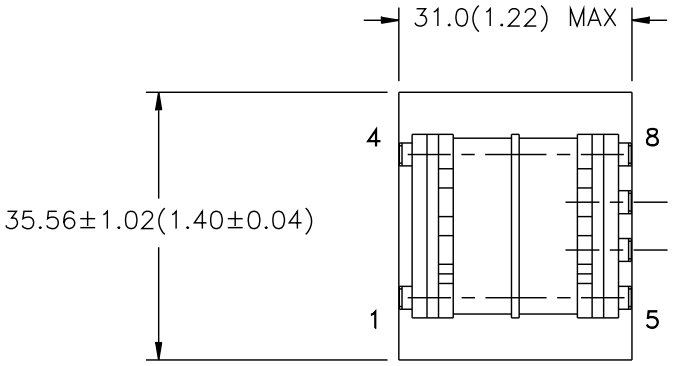

PREPARED BY: C POPPE				
ENGINEER: M. PITCHAI	DRAWING CONTROL NO. P–A1–11646	REV F	MODEL DESCRIPTION SIZE 3 3FS & PSS FAMILY POWER TRANSFORMER	MODEL SPECIFICATION 3FS–3XX & PSS3–XX
SAFETY ENGINEER	CONTENTS OF THIS DRAWING ARE SUBJECT TO CHANGE WITHOUT PRIOR NOTICE		TAMURA CORPORATION OF AMERICA 1040 SOUTH ANDREASEN DRIVE, #100 ESCONDIDO, CA. 92029 (760) 871–2009	DIM: mm[In] SCL: NONE SH: 1 OF 2
APPROVED: M. PITCHAI	PROPRIETARY NOTICE: THIS DRAWING PRINT OR DOCUMENT AND SUBJECT MATTER DISCLOSED HEREIN ARE PROPRIETARY ITEMS TO WHICH TAMURA RETAINS THE EXCLUSIVE RIGHT OF DISSEMINATION, REPRODUCTION, MANUFACTURE AND SALE. THIS DRAWING, PRINT OR DOCUMENT IS SUBMITTED IN CONFIDENCE FOR CONSIDERATION BY THE RECIPIENT ALONE UNLESS PERMISSION FOR FURTHER DISCLOSURE IS EXPRESSLY GRANTED IN WRITING.			

REV. Status

SEE SHEET 1 FOR CURRENT REVISION

MODEL NUMBER 3FS-3XX & PSS3-XX

E. Mounting Footprint:

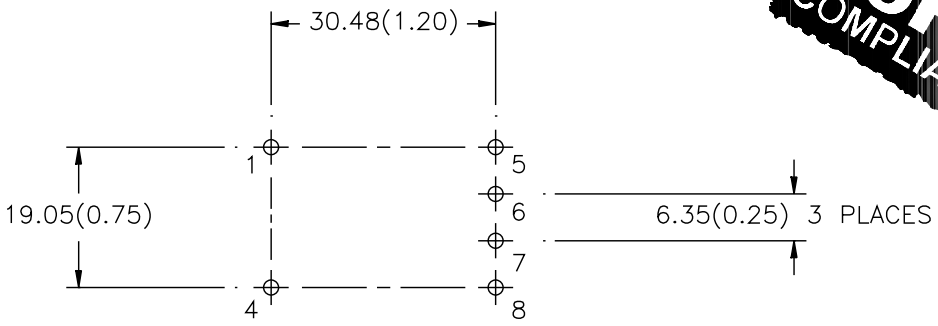

F. Schematic Diagram:

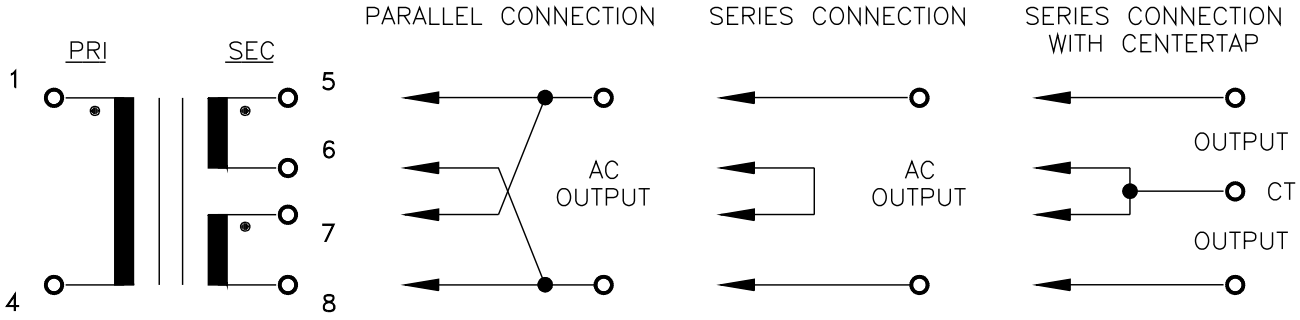

*not UL – recognized for series connect.

G. Table A: (NOTE: All parts are dual marked with both part numbers)

UL APPROVED FUSE

TAMURA P/N	MICROTRAN PART NO.	PARALLEL		SERIES		SERIES WITH CT		SECONDARY FUSE REQUIRED EACH WINDING
		AC VOLTS	RMS AMPS	AC VOLTS	RMS AMPS	AC VOLTS	RMS AMPS	
3FS-310	PSS3-10	5.0	0.50	10.0	0.25	5.0-CT-5.0	0.25	0.3A
3FS-312	PSS3-12	6.3	0.40	12.6	0.20	6.3-CT-6.3	0.20	0.25A
3FS-316	PSS3-16	8.0	0.30	16.0	0.15	8.0-CT-8.0	0.15	0.2A
3FS-320	PSS3-20	10.0	0.24	20.0	0.12	10.0-CT-10.0	0.12	0.15A
3FS-324	PSS3-24	12.0	0.20	24.0	0.10	12.0-CT-12.0	0.10	0.125A
3FS-328	PSS3-28	14.0	0.17	28.0	0.085	14.0-CT-14.0	0.085	0.1A
3FS-336	PSS3-36	18.0	0.13	36.0	0.065	18.0-CT-18.0	0.065	0.1A
3FS-348	PSS3-48	24.0	0.10	48.0	0.05	24.0-CT-24.0	0.05	1/16A
3FS-356	PSS3-56	28.0	0.09	56.0	0.045	28.0-CT-28.0	0.045	1/16A
3FS-3120	PSS3-120	60.0	0.04	120.0*	0.02	60.0-CT-60.0	0.02	N/A

PREPARED BY: C. POPPE

ENGINEER: M.PITCHAI

SAFETY ENGINEER

APPROVED: M. PITCHAI

DRAWING CONTROL NO. P-A1-11646

REV F

MODEL DESCRIPTION: SIZE 3 3FS & PSS FAMILY POWER TRANSFORMER

MODEL SPECIFICATION: 3FS-3XX & PSS3-XX

CONTENTS OF THIS DRAWING ARE SUBJECT TO CHANGE WITHOUT PRIOR NOTICE

TAMURA CORPORATION OF AMERICA
1040 SOUTH ANDREASEN DRIVE, #100 ESCONDIDO, CA. 92029
(760) 871-2009

DIM: mm[In] | SCL: NONE | SH: 2 OF 2

PROPRIETARY NOTICE: THIS DRAWING PRINT OR DOCUMENT AND SUBJECT MATTER DISCLOSED HEREIN ARE PROPRIETARY ITEMS TO WHICH TAMURA RETAINS THE EXCLUSIVE RIGHT OF DISSEMINATION, REPRODUCTION, MANUFACTURE AND SALE. THIS DRAWING, PRINT OR DOCUMENT IS SUBMITTED IN CONFIDENCE FOR CONSIDERATION BY THE RECIPIENT ALONE UNLESS PERMISSION FOR FURTHER DISCLOSURE IS EXPRESSLY GRANTED IN WRITING.