3-teminal Filters

For signal line

ACF series

Type:	**ACF3225**	**[1210 inch]***
	ACF4532	**[1812 inch]**

*** Dimensions Code [EIA]**

Issue date: September 2011

- All specifications are subject to change without notice.
- Conformity to RoHS Directive: This means that, in conformity with EU Directive 2002/95/EC, lead, cadmium, mercury, hexavalent chromium, and specific bromine-based flame retardants, PBB and PBDE, have not been used, except for exempted applications.

3-terminal Filters
For Signal Line

Conformity to RoHS Directive

ACF Series ACF321825, ACF451832

FEATURES

- The ACF series consists of products with superior attenuation characteristics, in which the T-type filter circuit is magnetically shielded with ferrite.
- The series offers even greater attenuation characteristics when used in a stable circuit on the ground.
- The ACF series is ideal for high-density circuit design, since the series is vertically mounted and does not require much mounting space.
- Available for reflow soldering.
- It is a product conforming to RoHS directive.

PRODUCT IDENTIFICATION

ACF	321825	-	223	-	T	D□□
(1)	(2)		(3)		(4)	(5)

(1) Series name
(2) Dimensions
(3) Type
(4) Packaging style
(5) TDK internal code

TEMPERATURE RANGES

Operating/Storage	–25 to +85°C

PACKAGING STYLE AND QUANTITIES

Packaging style	Quantity
Taping	1000 pieces/reel

HANDLING AND PRECAUTIONS

- Before soldering, be sure to preheat components. The preheating temperature should be set so that the temperature difference between the solder temperature and product temperature does not exceed 150°C.
- After mounting components onto the printed circuit board, do not apply stress through board bending or mishandling.
- The inductance value may change due to magnetic saturation if the current exceeds the rated maximum.
- Do not expose the inductors to stray magnetic fields.
- Avoid static electricity discharge during handling.
- When hand soldering, apply the soldering iron to the printed circuit board only. Temperature of the iron tip should not exceed 350°C. Soldering time should not exceed 3 seconds.

- Conformity to RoHS Directive: This means that, in conformity with EU Directive 2002/95/EC, lead, cadmium, mercury, hexavalent chromium, and specific bromine-based flame retardants, PBB and PBDE, have not been used, except for exempted applications.
- Please contact our Sales office when your application is considered the following:
  The device's failure or malfunction may directly endanger human life (e.g. application for automobile/aircraft/medical/nuclear power devices, etc.)

• All specifications are subject to change without notice.

ACF321825 TYPE

SHAPES AND DIMENSIONS/CIRCUIT DIAGRAM

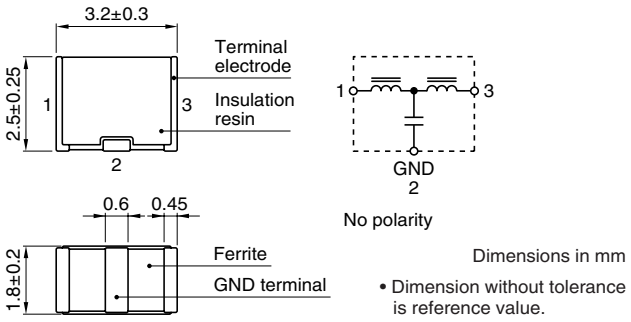

RECOMMENDED PC BOARD PATTERN
REFLOW SOLDERING

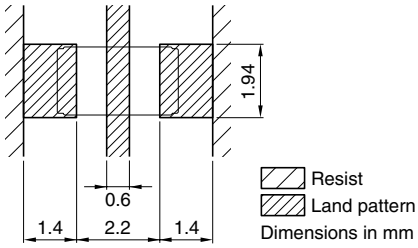



ELECTRICAL CHARACTERISTICS

Part No.	25dB attenuation frequency range (MHz)	Rated voltage Edc (V)max.	Rated current (mA)max.	DC resistance (Ω)max. [Terminal No.1 to 3]	Insulation resistance (MΩ)min. [Terminal No.1 to 2/No.2 to 3]
ACF321825-223	11 to 55	20	300	0.15	1000
ACF321825-103	17 to 60	20	300	0.15	1000
ACF321825-682	22 to 75	20	300	0.15	1000
ACF321825-472	30 to 85	20	300	0.15	1000
ACF321825-332	37 to 90	20	300	0.15	1000
ACF321825-222	45 to 105	20	300	0.15	1000
ACF321825-152	60 to 115	20	300	0.15	1000
ACF321825-102	80 to 140	20	300	0.15	1000
ACF321825-681	95 to 150	20	300	0.15	1000
ACF321825-471	120 to 180	20	300	0.15	1000
ACF321825-331	130 to 210	20	300	0.15	1000
ACF321825-221	170 to 250	20	300	0.15	1000
ACF321825-151	205 to 280	20	300	0.15	1000
ACF321825-101	265 to 340	20	300	0.15	1000
ACF321825-680	340 to 420	20	300	0.15	1000
ACF321825-470	420 to 500	20	300	0.15	1000
ACF321825-330	500 to 600	20	300	0.15	1000
ACF321825-220	600 to 700	20	300	0.15	1000

TYPICAL ELECTRICAL CHARACTERISTICS
ATTENUATION vs. FREQUENCY CHARACTERISTICS

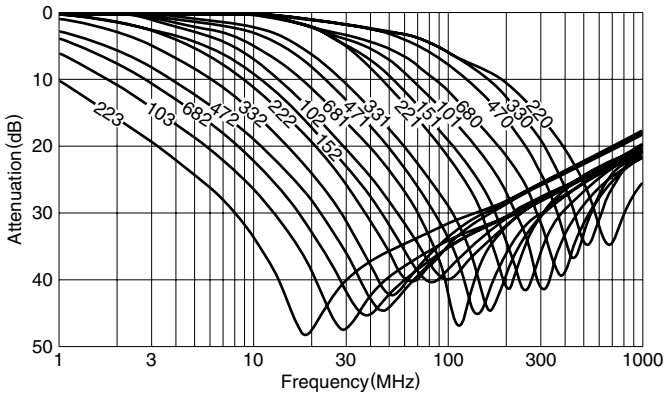

MEASURING CIRCUIT

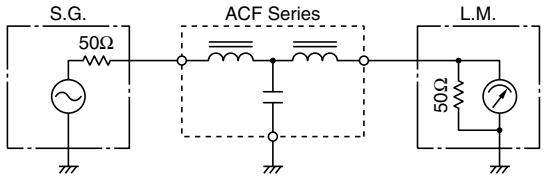

ACF451832 TYPE

SHAPES AND DIMENSIONS/CIRCUIT DIAGRAM

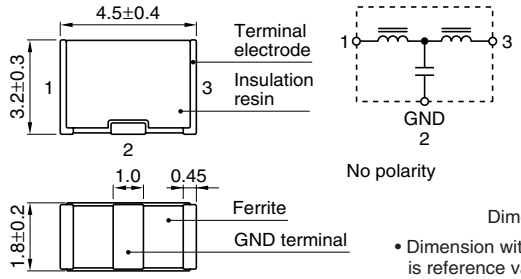

Dimensions in mm

• Dimension without tolerance is reference value.

RECOMMENDED PC BOARD PATTERN
REFLOW SOLDERING

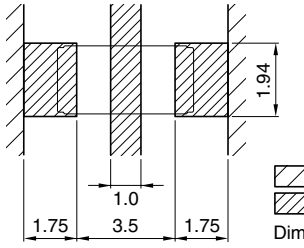



ELECTRICAL CHARACTERISTICS

Part No.	25dB attenuation frequency range (MHz)	Rated voltage Edc (V)max.	Rated current (mA)max.	DC resistance (Ω)max. [Terminal No.1 to 3]	Insulation resistance (MΩ)min. [Terminal No.1 to 2/No.2 to 3]
ACF451832-333	7 to 60	50	300	0.15	1000
ACF451832-223	9 to 65	50	300	0.15	1000
ACF451832-153	11 to 70	50	300	0.15	1000
ACF451832-103	15 to 75	50	300	0.15	1000
ACF451832-682	20 to 85	50	300	0.15	1000
ACF451832-472	25 to 90	50	300	0.15	1000
ACF451832-332	35 to 100	50	300	0.15	1000
ACF451832-222	40 to 110	50	300	0.15	1000
ACF451832-152	50 to 130	50	300	0.15	1000
ACF451832-102	65 to 150	50	300	0.15	1000
ACF451832-681	75 to 160	50	300	0.15	1000
ACF451832-471	95 to 180	50	300	0.15	1000
ACF451832-331	115 to 205	50	300	0.15	1000
ACF451832-221	150 to 250	50	300	0.15	1000
ACF451832-151	190 to 290	50	300	0.15	1000
ACF451832-101	235 to 335	50	300	0.15	1000
ACF451832-680	295 to 395	50	300	0.15	1000
ACF451832-470	360 to 460	50	300	0.15	1000
ACF451832-330	450 to 550	50	300	0.15	1000
ACF451832-220	550 to 650	50	300	0.15	1000

TYPICAL ELECTRICAL CHARACTERISTICS
ATTENUATION vs. FREQUENCY CHARACTERISTICS

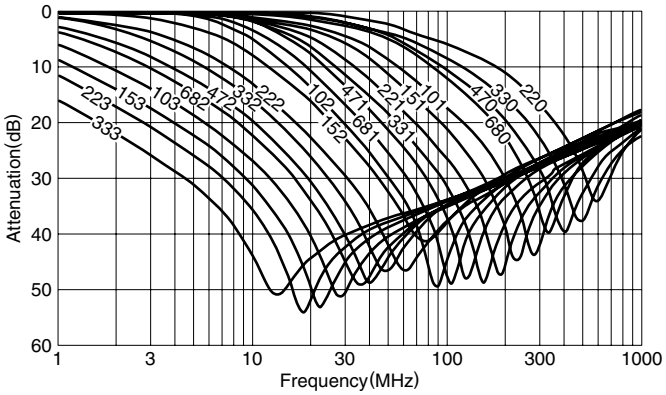

MEASURING CIRCUIT

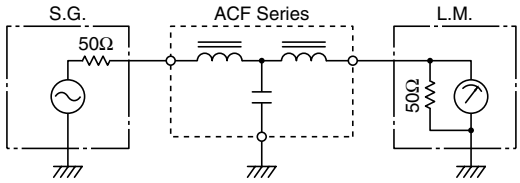

PACKAGING STYLES

REEL DIMENSIONS

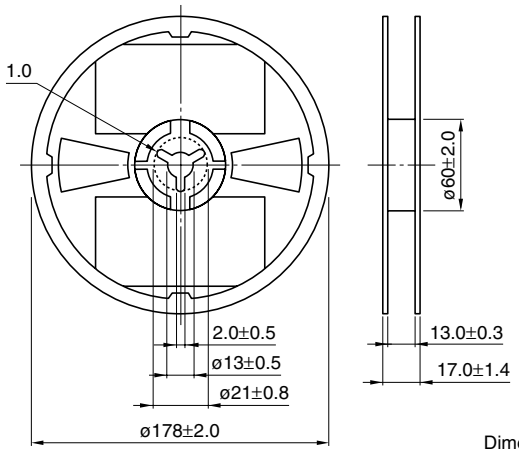

Dimensions in mm

TAPE DIMENSIONS

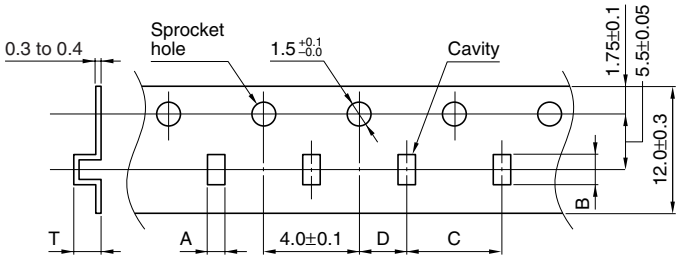

Dimensions in mm

Type	A	B	C	D	T
321825	2.2±0.2	3.7±0.2	4.0±0.1	2.0±0.05	3.3max.
451832	2.2±0.2	5.2±0.2	4.0±0.1	2.0±0.05	3.8max.

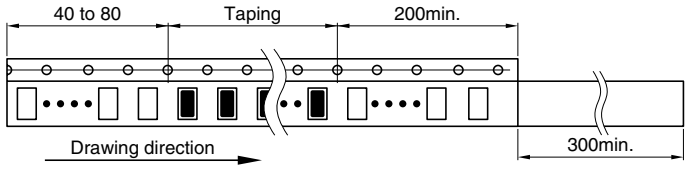

Dimensions in mm