Common mode filters
Automotive signal line (for power train/safety)
ACT series

RoHS REACH SVHC-Free Lead Free

AEC-Q200

ACT45B type

Product Portal Search Simulation Model Selection Guide Tech Library Tech Note

FEATURES

- Compatible with an operating temperature range of –40 to +150°C, so can be used for vehicle devices requiring compatibility with high temperatures.
- When mounting, the terminal and winding tape splicing part do not fuse.
- Operating temperature range: –40 to +150°C
- Compliant with AEC-Q200

APPLICATION

- CAN-BUS, FAXs, modems, ISDNs, etc.
- Application guides: Automotive (xEV), Car Infotainment

PART NUMBER CONSTRUCTION

ACT45B	-	110	-	2P	-	TL	003
Series • type name		Inductance(typ.) (µH)		Number of lines		Packaging style	Internal code

CHARACTERISTICS SPECIFICATION TABLE

Common mode impedance [10MHz] (Ω)min.	(Ω)typ.	Common mode inductance [100kHz] (µH)+50/–30%	Stray inductance [100kHz] (µH)typ.	DC resistance (Ω)max.	Rated current (A)max.	Insulation resistance (MΩ)min.	Rated voltage (V)max.	Part No.
300	600	11	0.05	0.6	0.25	10	50	ACT45B-110-2P-TL003
500	1200	22	0.08	1.0	0.2	10	50	ACT45B-220-2P-TL003
1000	2800	51	0.15	1.0	0.2	10	50	ACT45B-510-2P-TL003
2000	5800	100	0.20	2.0	0.15	10	50	ACT45B-101-2P-TL003

Measurement equipment

Measurement item	Product No.	Manufacturer
Common mode impedance	4991A	Keysight Technologies
Common mode inductance	4294A	Keysight Technologies
DC resistance	4338A	Keysight Technologies
Insulation resistance	4339A	Keysight Technologies

∗ Equivalent measurement equipment may be used.



ACT45B type

IMPEDANCE VS. FREQUENCY CHARACTERISTICS

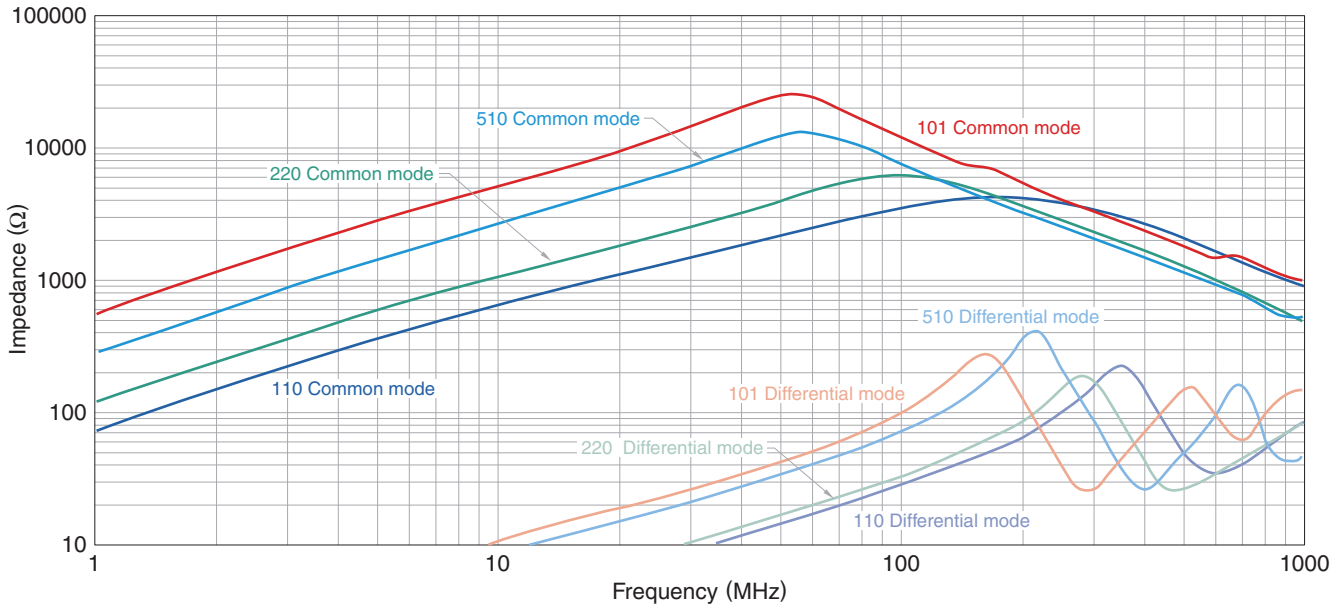

Measurement equipment

Product No.	Manufacturer
4991A	Keysight Technologies

* Equivalent measurement equipment may be used.

ACT45B type

SHAPE & DIMENSIONS

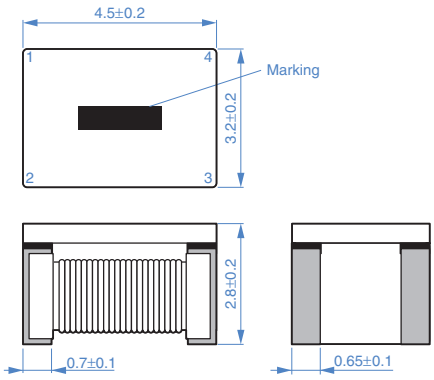

Dimensions in mm

RECOMMENDED LAND PATTERN

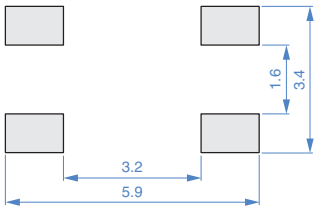

Dimensions in mm

CIRCUIT DIAGRAM

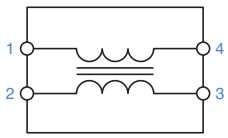

• No polarity

RECOMMENDED REFLOW PROFILE

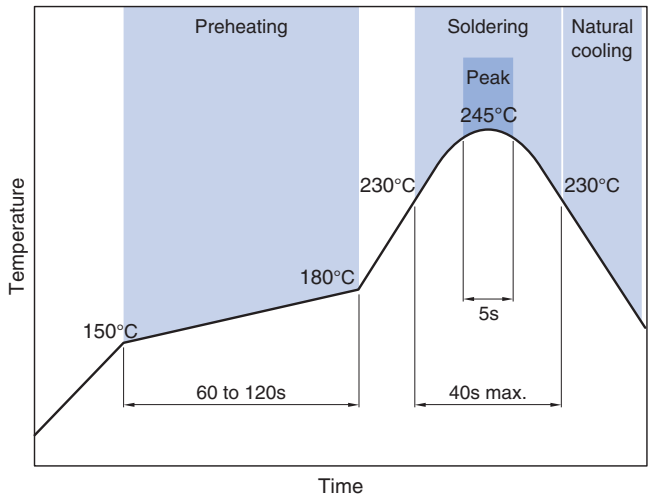

PACKAGING STYLE

REEL DIMENSIONS

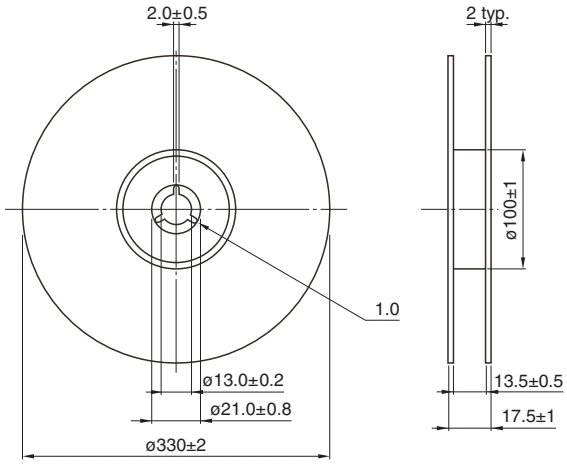

Dimensions in mm

TAPE DIMENSIONS

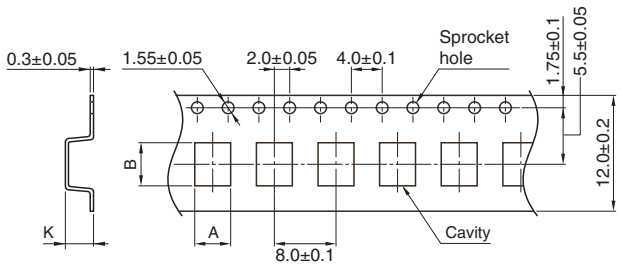

Dimensions in mm

Type	A	B	K
ACT45B	3.6±0.1	4.9±0.1	3.05±0.1

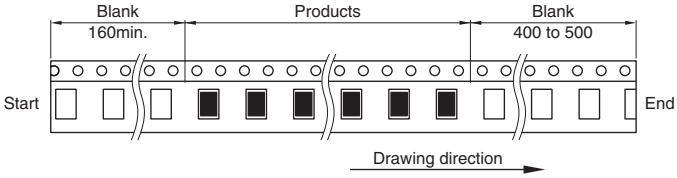

Dimensions in mm

PACKAGE QUANTITY

Package quantity	2,500 pcs/reel

TEMPERATURE RANGE, INDIVIDUAL WEIGHT

Operating temperature range	Storage temperature range*	Individual weight
–40 to +150 °C	–40 to +150 °C	0.14 g

* The storage temperature range is for after the assembly.

⚠ Please be sure to request delivery specifications that provide further details on the features and specifications of the products for proper and safe use.
Please note that the contents may change without any prior notice due to reasons such as upgrading.

REMINDERS FOR USING THESE PRODUCTS

Before using these products, be sure to request the delivery specifications.

SAFETY REMINDERS

Please pay sufficient attention to the warnings for safe designing when using this products.

⚠ REMINDERS

- The storage period is less than 12 months. Be sure to follow the storage conditions (temperature: 5 to 40°C, humidity: 10 to 75% RH or less).
  If the storage period elapses, the soldering of the terminal electrodes may deteriorate.
- Do not use or store in locations where there are conditions such as gas corrosion (salt, acid, alkali, etc.).
- Before soldering, be sure to preheat components.
  The preheating temperature should be set so that the temperature difference between the solder temperature and chip temperature does not exceed 150°C.
- Soldering corrections after mounting should be within the range of the conditions determined in the specifications.
  If overheated, a short circuit, performance deterioration, or lifespan shortening may occur.
- When embedding a printed circuit board where a chip is mounted to a set, be sure that residual stress is not given to the chip due to the overall distortion of the printed circuit board and partial distortion such as at screw tightening portions.
- Self heating (temperature increase) occurs when the power is turned ON, so the tolerance should be sufficient for the set thermal design.
- Carefully lay out the coil for the circuit board design of the non-magnetic shield type.
  A malfunction may occur due to magnetic interference.
- Use a wrist band to discharge static electricity in your body through the grounding wire.
- Do not expose the products to magnets or magnetic fields.
- Do not use for a purpose outside of the contents regulated in the delivery specifications.
- The products listed on this catalog are intended for use in general electronic equipment (AV equipment, telecommunications equipment, home appliances, amusement equipment, computer equipment, personal equipment, office equipment, measurement equipment, industrial robots) under a normal operation and use condition.
  The products are not designed or warranted to meet the requirements of the applications listed below, whose performance and/or quality require a more stringent level of safety or reliability, or whose failure, malfunction or trouble could cause serious damage to society, person or property.
  If you intend to use the products in the applications listed below or if you have special requirements exceeding the range or conditions set forth in the each catalog, please contact us.

(1) Aerospace/aviation equipment
(2) Transportation equipment (electric trains, ships, etc.)
(3) Medical equipment
(4) Power-generation control equipment
(5) Atomic energy-related equipment
(6) Seabed equipment
(7) Transportation control equipment
(8) Public information-processing equipment
(9) Military equipment
(10) Electric heating apparatus, burning equipment
(11) Disaster prevention/crime prevention equipment
(12) Safety equipment
(13) Other applications that are not considered general-purpose applications

When designing your equipment even for general-purpose applications, you are kindly requested to take into consideration securing protection circuit/device or providing backup circuits in your equipment.