SMT current sense transformers

EP7 Core

Series/Type: **B78417**

Date: April 2023

© TDK Electronics AG 2023. Reproduction, publication and dissemination of this publication, enclosures hereto and the information contained therein without TDK Electronics' prior express consent is prohibited.

Construction



- Ferrite core
- Primary winding: frame molded in
- Secondary winding: copper wire
- Creepage distance Np/(Ns, core) 5 mm
- Clearance distance Np/Ns (CuL) 3.2 mm
- Clearance distance Np/core 3.5 m
- Plastic bobbin (UL94-V0, CTI ≥ 175)

Features

- Very low DC resistance
- Different turn ratios
- Small SMD package
- RoHS compatible
- Qualified to AEC-Q200
- Insulation distances in compliance with IEC 60664 (Basic insulation, working voltage RMS 500 V)
- UL 1446 Class 155 (F) electrical insulation system

Applications

- Switch-mode power supplies
- Feedback control
- Overload sensing
- Load drop/shut down detection

Terminals

- SMD L-Pins

Marking

- Product brand, middle block of ordering code, date code, pin 1 marker, production place identification code

Delivery mode and packing units

- Blister tape
- Packing unit: 320 pcs. / reel

Dimensional drawing

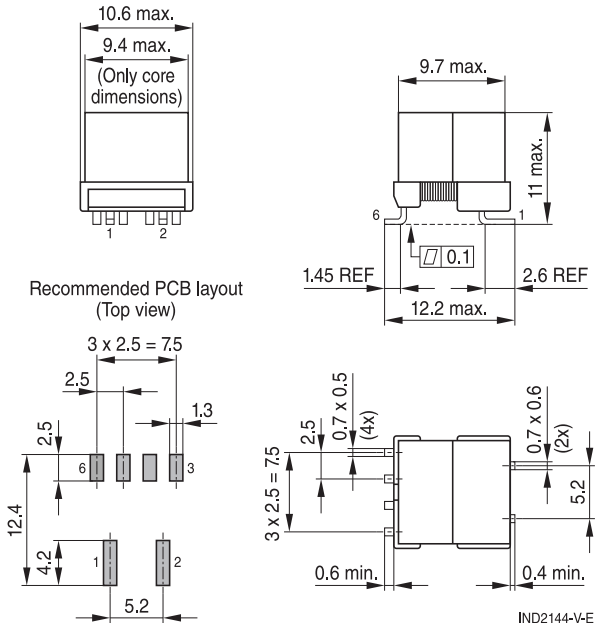

Application circuit and pinning

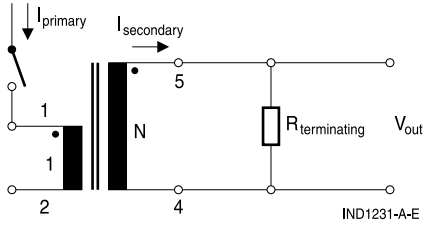

Technical data and measuring conditions

All data is specified at +25 °C if not mentioned otherwise. All values without tolerance are typical values.

Frequency range	50 ... 500 kHz
High voltage test	2400 V AC, 50 Hz, 1 s (winding to winding), type test 60 s
Inductance L (5-4)	Measured at 20 kHz, 10 mV, +25 °C
DC resistance R_{max} (1-2)	Measured at +25 °C
DC resistance R_{max} (5-4)	Measured at +25 °C
Sensed current $I_{prim, RMS}$	The max. primary current of 20 A causes approx. +40 °C temperature rise
Couple capacitance C_p (1-5)	Measured at 10 kHz, 1 V, +25 °C
Solderability	≥ 99.9 Sn, lead-free. or Sn96.5Ag3.0Cu0.5: +(245 ±5) °C, (3 ±0.3) s Wetting of soldering area ≥ 95% (to IEC 60068-2-58)
Resistance to soldering heat	In accordance with JEDEC J-STD-020D +245 °C (T_{peak} –5 °C for 30 s)
Storage conditions (packaged)	–20 °C … +40 °C, ≤ 75% RH
Operating temperature range	–40 °C … +150 °C
Pollution degree	P2 (to IEC 61558-1, IEC 60664)
Insulation thermal class	+155 °C (F) (to IEC 60085)
Weight	Approx. 2.5 g

$$B_{max} = \frac{V_{out,\,max} \cdot \delta_{max}}{N_s \cdot A_e \cdot f_{osc}}$$

With:

B_{max}	Maximum magnetic flux density in the ferrite core of the current sense transformer
$V_{out,max}$	Maximum output voltage of the measurement signal
δ_{max}	Maximum duty cycle
N_s	Number of turns of the secondary winding of the current sense transformer
A_e	Effective magnetic area of the ferrite core
f_{osc}	Operating frequency of the switching operator IC
Typical value for A_e:	10.7×10^{-6} m^2
Typical B_{max}:	< 220 m T

$$R_T = \frac{V_{out,\,max} \cdot N_s}{I_{IN,\,max}}$$

With:

R_T	Resistance of burden resistor
$V_{out,max}$	Maximum output voltage of the measurement signal
N_s	Number of turns of the secondary side of the CST
$I_{IN,max}$	Maximum input current (peak current)

Characteristics and ordering codes

L_{min} (5-4)	Turns ratio	DC resistance R_{max} (mΩ)		Voltage-time product at n_s [1]	C_p	Recomm. R_T [2]	Ordering code
mH	$n_p : n_s$	(1-2) primary	(4-5) secondary	V • µs	pF	Ω	
1.7	1 : 50	1.9	2.1	116	4	2.5	B78417A2285A003
3.0	1 : 70	1.9	2.9	163	4	3.5	B78417A2286A003
7.0	1 : 100	1.9	5.0	233	4	5.0	B78417A2185A003
11.0	1 : 125	1.9	5.3	291	4	6.0	B78417A2287A003

1) The maximum volt-sec rating limits the peak flux density to 200 mT when used in a unipolar drive application. For bi-polar drive applications, a maximum volt-sec of two times is acceptable.
2) The Burden Resistor value is calculated by taking V_{out} as 1 V reference and with maximum input current (20 A) flowing through the primary winding of the current sense transformer.

Taping and packing

Blister tape

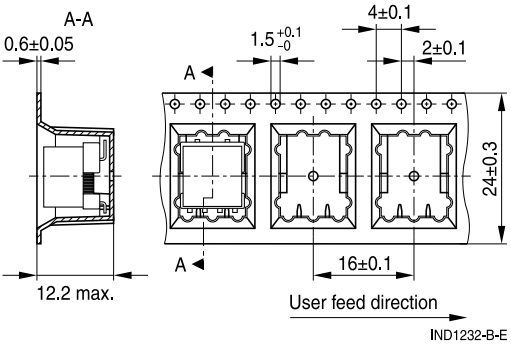

Dimensions in mm

Reel

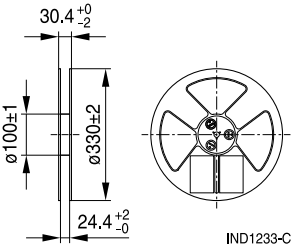

Dimensions in mm

Recommended reflow soldering curve

Pb-free solder material (based on JEDEC J-STD 020E)

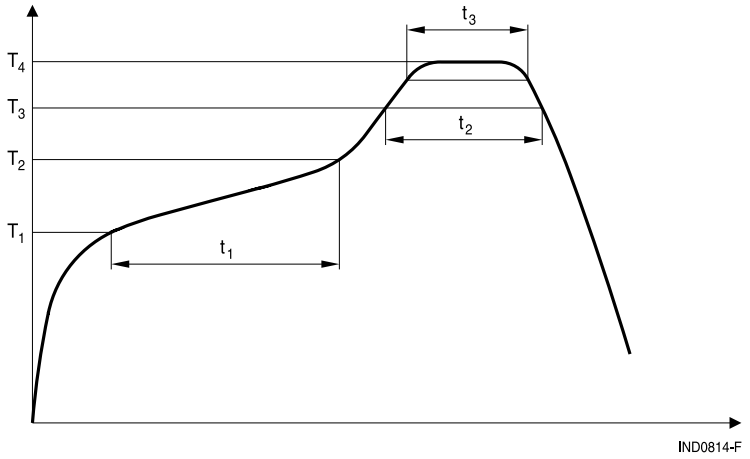

T_1	T_2	T_3	T_4	t_1	t_3	t_3
°C	°C	°C	°C	sec	sec	sec
150	200	217	245	60 – 120	60 – 150	< 30 @ T_4 – 5 °C

Time from 24 °C to T_4: max 480 s

Maximal numbers of reflow cycles: 3

Cautions and warnings

- Please note the recommendations in our Inductors data book (latest edition), online catalogs and in the data sheets.
  - Particular attention should be paid to the derating curves, if given. Derating applies in the case the ambient temperature in application exceeds the rated temperature of the component.
  - Ensure the operation temperature of the component in application, not to exceed the maximum specified value or the upper climatic category temperature.
  - The soldering conditions should also be observed. Temperatures quoted in relation to wave soldering refer to the pin, not the housing.
- If the components are to be washed varnished it is necessary to check whether the washing varnish agent that is used has a negative effect on the wire insulation, any plastics that are used, or on glued joints. It is possible for washing varnish agent residues to have a negative effect in the long−term on wire insulation.

  Washing processes may damage the product due to the possible static or cyclic mechanical loads (e.g., ultrasonic cleaning). They may cause cracks to develop on the product and its parts, which might lead to reduced reliability or lifetime.
- The following points must be observed if the components are potted, sealed, or varnished in customer applications:
  - Many potting, sealing of varnishing materials shrink as they harden. They therefore exert a pressure on the plastic housing or core. This pressure can have a deleterious effect on electrical properties, and in extreme cases can damage the core or plastic housing mechanically.
  - It is necessary to check whether the potting, sealing or varnishing materials used attacks or destroys the wire insulation, plastics, or glue.
  - The effect of the potting, sealing, or varnishing materials may change the high−frequency behavior of the components.
- Magnetic core materials such as ferrites are sensitive to direct impact. This can cause the core material to flake or lead to breakage of the magnetic core material.
- Any type of tension or pressure on the product may result in damage and affect its functionality and reliability.
  - The products are only to be attached to fixings or mounting holes provided for this purpose in accordance with the data sheet.
  - If additional mechanical forces are applied to the component, e.g., application of gap pads, it is necessary to check whether they attack or destroy any part of the component.
  - It is not permitted for the product specified in the data sheet to assume a mechanical function in the final application.
- Inductance value can drop if external metallic or magnetic parts will be put close to the coil or into the air gap of the coil or core or magnetic material.
- Even for customer-specific products, conclusive validation of the component in the circuit can only be carried out by the customer.

Display of ordering codes for TDK Electronics products

The ordering code for one and the same product can be represented differently in data sheets, data books, other publications, on the company website, or in order-related documents such as shipping notes, order confirmations and product labels. **The varying representations of the ordering codes are due to different processes employed and do not affect the specifications of the respective products**. Detailed information can be found on the Internet under www.tdk-electronics.tdk.com/orderingcodes.

Important notes

The following applies to all products named in this publication:

1. Some parts of this publication contain **statements about the suitability of our products for certain areas of application**. These statements are based on our knowledge of typical requirements that are often placed on our products in the areas of application concerned. We nevertheless expressly point out **that such statements cannot be regarded as binding statements about the suitability of our products for a particular customer application.** As a rule, we are either unfamiliar with individual customer applications or less familiar with them than the customers themselves. For these reasons, it is always ultimately incumbent on the customer to check and decide whether a product with the properties described in the product specification is suitable for use in a particular customer application.

2. We also point out that **in individual cases, a malfunction of electronic components or failure before the end of their usual service life cannot be completely ruled out in the current state of the art, even if they are operated as specified.** In customer applications requiring a very high level of operational safety and especially in customer applications in which the malfunction or failure of an electronic component could endanger human life or health (e.g. in accident prevention or life-saving systems), it must therefore be ensured by means of suitable design of the customer application or other action taken by the customer (e.g. installation of protective circuitry or redundancy) that no injury or damage is sustained by third parties in the event of malfunction or failure of an electronic component.

3. **The warnings, cautions and product-specific notes must be observed**.

4. In order to satisfy certain technical requirements, **some of the products described in this publication may contain substances subject to restrictions in certain jurisdictions (e.g. because they are classed as hazardous)**. Useful information on this will be found in our Material Data Sheets on the Internet (www.tdk-electronics.tdk.com/material). Should you have any more detailed questions, please contact our sales offices.

5. We constantly strive to improve our products. Consequently, **the products described in this publication may change from time to time**. The same is true of the corresponding product specifications. Please check therefore to what extent product descriptions and specifications contained in this publication are still applicable before or when you place an order.
   We also **reserve the right to discontinue production and delivery of products**. Consequently, we cannot guarantee that all products named in this publication will always be available. The aforementioned does not apply in the case of individual agreements deviating from the foregoing for customer-specific products.

6. Unless otherwise agreed in individual contracts, **all orders are subject to our General Terms and Conditions of Supply**.

7. **Our manufacturing sites serving the automotive business apply the IATF 16949 standard**. The IATF certifications confirm our compliance with requirements regarding the quality management system in the automotive industry. Referring to customer requirements and customer specific requirements (“CSR”) TDK always has and will continue to have the policy of respecting individual agreements. Even if IATF 16949 may appear to support the acceptance of unilateral requirements, we hereby like to emphasize that **only requirements mutually agreed upon can and will be implemented in our Quality Management System.** For clarification purposes we like to point out that obligations from IATF 16949 shall only become legally binding if individually agreed upon.
8. The trade names EPCOS, CarXield, CeraCharge, CeraDiode, CeraLink, CeraPad, CeraPlas, CSMP, CTVS, DeltaCap, DigiSiMic, ExoCore, FilterCap, FormFit, InsuGate, LeaXield, MiniBlue, MiniCell, MKD, MKK, ModCap, MotorCap, PCC, PhaseCap, PhaseCube, PhaseMod, PhiCap, PowerHap, PQSine, PQvar, SIFERRIT, SIFI, SIKOREL, SilverCap, SIMDAD, SiMic, SIMID, SineFormer, SIOV, ThermoFuse, WindCap, XieldCap are **trademarks registered or pending** in Europe and in other countries. Further information will be found on the Internet at www.tdk-electronics.tdk.com/trademarks.

Release 2022-07