Magnetics modules for LAN applications

1000 Base-T magnetics module

Series/Type: **B78476A8253A003**

Date: March 2015

© EPCOS AG 2015. Reproduction, publication and dissemination of this publication, enclosures hereto and the information contained therein without EPCOS' prior express consent is prohibited.

EPCOS AG is a TDK Group Company.

1000 Base-T magnetics module **B78476A8253A003**

Single port, power over ethernet

SMD

Features

- Ferrite toroid, case and potting (UL 94 V-0)
- Compliant with IPC/JEDEC J-STD-020D
- Compliant with IEEE 802.3af
- Optimized for full duplex applications
- RoHS-compatible

Marking

- EPCOS, middle block of ordering code, date code

Delivery mode and packing unit

- 32-mm blister tape,
  330-mm ∅ reel (cardboard packaging)
- Packing unit: 350 pcs./reel

Dimensional drawing

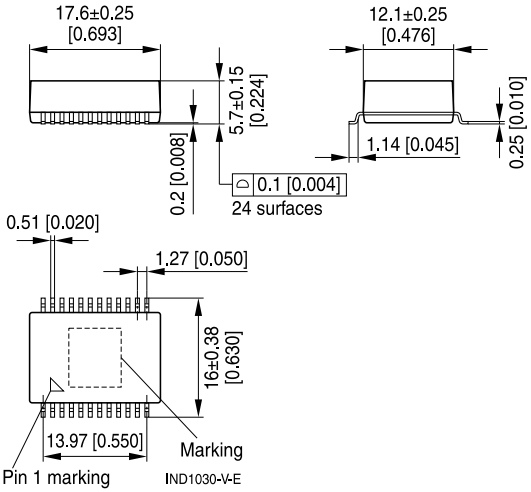

Layout recommendation

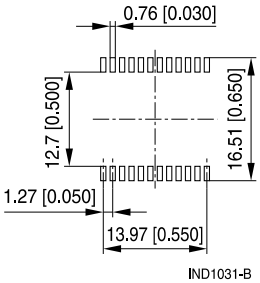

Dimensions in mm [inch]
Values without tolerances are nominal values for reference.

SMD

Pinning

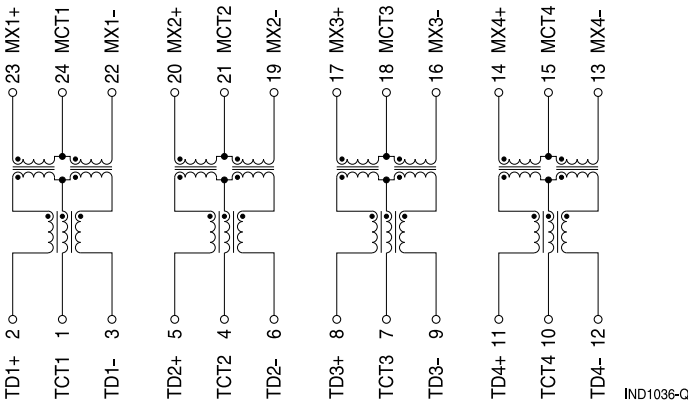

Characteristics and ordering code

(electrical specifications at +25 °C)

Ordering code	B78476A8253A003	
Turns ratio (primary : secondary)	1CT : 1CT ±3%	
Inductance L	350 µH min.	100 kHz, 100 mV, 8 mA DC bias
Voltage test V_{test}	1500 V AC	50 Hz, 1 min
Insertion loss	−1.1 dB max. −1.0 dB max. −2.0 dB max.	0.1 MHz 100 MHz 125 MHz
Return loss	−18 dB min. −16 dB min. −12 dB min. −10 dB min.	1 MHz ... 40 MHz 50 MHz 60 MHz ... 80 MHz 100 MHz
Crosstalk	−43 dB min. −37 dB min. −33 dB min.	30 MHz 60 MHz 100 MHz
Differential to common-mode rejection (DCMR)	−33 dB min. −33 dB min. −33 dB min.	30 MHz 60 MHz 100 MHz
Operating temperature range	0 °C ... +70 °C	
Weight	Approx. 1.8 g	

SMD

Cautions and warnings

- For soldering conditions of SMD components please refer to JEDEC J-STD-020D.
- If the components are to be washed varnished it is necessary to check whether the washing varnish agent that is used has a negative effect on the wire insulation, any plastics that are used, or on glued joints. In particular, it is possible for washing varnish agent residues to have a negative effect in the long-term on wire insulation.
  Washing processesmay damage the product due to the possible static or cyclic mechanical loads (e.g. ultrasonic cleaning). They may cause cracks to developon the product and its parts, which might lead to reduced reliability or lifetime.
- The following points must be observed if the components are potted in customer applications:
  - Many potting materials shrink as they harden. They therefore exert a pressure on the plastic housing or core. This pressure can have a deleterious effect on electrical properties, and in extreme cases can damage the core or plastic housing mechanically.
  - It is necessary to check whether the potting material used attacks or destroys the wire insulation, plastics or glue.
  - The effect of the potting material can change the high-frequency behaviour of the components.
- Ferrites are sensitive to direct impact. This can cause the core material to flake, or lead to breakage of the core.
- Even for customer-specific products, conclusive validation of the component in the circuit can only be carried out by the customer.

Display of ordering codes for EPCOS products

The ordering code for one and the same product can be represented differently in data sheets, data books, other publications and the website of EPCOS, or in order-related documents such as shipping notes, order confirmations and product labels. The varying representations of the ordering codes are due to different processes employed and do not affect the specifications of the respective products. Detailed information can be found on the Internet under www.epcos.com/orderingcodes.

Important notes

The following applies to all products named in this publication:

1. Some parts of this publication contain **statements about the suitability of our products for certain areas of application**. These statements are based on our knowledge of typical requirements that are often placed on our products in the areas of application concerned. We nevertheless expressly point out **that such statements cannot be regarded as binding statements about the suitability of our products for a particular customer application.** As a rule we are either unfamiliar with individual customer applications or less familiar with them than the customers themselves. For these reasons, it is always ultimately incumbent on the customer to check and decide whether a product with the properties described in the product specification is suitable for use in a particular customer application.
2. We also point out that **in individual cases, a malfunction of electronic components or failure before the end of their usual service life cannot be completely ruled out in the current state of the art, even if they are operated as specified.** In customer applications requiring a very high level of operational safety and especially in customer applications in which the malfunction or failure of an electronic component could endanger human life or health (e.g. in accident prevention or life-saving systems), it must therefore be ensured by means of suitable design of the customer application or other action taken by the customer (e.g. installation of protective circuitry or redundancy) that no injury or damage is sustained by third parties in the event of malfunction or failure of an electronic component.
3. **The warnings, cautions and product-specific notes must be observed.**
4. In order to satisfy certain technical requirements, **some of the products described in this publication may contain substances subject to restrictions in certain jurisdictions (e.g. because they are classed as hazardous)**. Useful information on this will be found in our Material Data Sheets on the Internet (www.tdk-electronics.tdk.com/material). Should you have any more detailed questions, please contact our sales offices.
5. We constantly strive to improve our products. Consequently, **the products described in this publication may change from time to time**. The same is true of the corresponding product specifications. Please check therefore to what extent product descriptions and specifications contained in this publication are still applicable before or when you place an order.

   We also **reserve the right to discontinue production and delivery of products**. Consequently, we cannot guarantee that all products named in this publication will always be available. The aforementioned does not apply in the case of individual agreements deviating from the foregoing for customer-specific products.
6. Unless otherwise agreed in individual contracts, **all orders are subject to our General Terms and Conditions of Supply.**
7. **Our manufacturing sites serving the automotive business apply the IATF 16949 standard.** The IATF certifications confirm our compliance with requirements regarding the quality management system in the automotive industry. Referring to customer requirements and customer specific requirements (“CSR”) TDK always has and will continue to have the policy of respecting individual agreements. Even if IATF 16949 may appear to support the acceptance of unilateral requirements, we hereby like to emphasize that **only requirements mutually agreed upon can and will be implemented in our Quality Management System.** For clarification purposes we like to point out that obligations from IATF 16949 shall only become legally binding if individually agreed upon.

Important notes

8. The trade names EPCOS, CeraCharge, CeraDiode, CeraLink, CeraPad, CeraPlas, CSMP, CTVS, DeltaCap, DigiSiMic, ExoCore, FilterCap, FormFit, LeaXield, MiniBlue, MiniCell, MKD, MKK, MotorCap, PCC, PhaseCap, PhaseCube, PhaseMod, PhiCap, PowerHap, PQSine, PQvar, SIFERRIT, SIFI, SIKOREL, SilverCap, SIMDAD, SiMic, SIMID, SineFormer, SIOV, ThermoFuse, WindCap are **trademarks registered or pending** in Europe and in other countries. Further information will be found on the Internet at www.tdk-electronics.tdk.com/trademarks.

Release 2018-10