EMC filters

3-line filters
for converters and power electronics

Series/Type: **B84143A*R107**

Date: June 2021

© TDK Electronics AG 2021. Reproduction, publication and dissemination of this publication, enclosures hereto and the information contained therein without TDK Electronics' prior express consent is prohibited.

Power line filters for 3-phase systems
Rated voltage V_R: 300/520 V AC
Rated current I_R: 10 A to 100 A



Schematic picture

Construction

- 3-line filters
- Metal case

Features

- High insertion loss
- Optimized leakage current
- Discharge time < 60 V in 1 s for V_R (L-L) ≤ 400 V
- Easy to install
- Low weight
- Compact design
- Degree of protection: IP 20[1)]
- Short circuit current rating SCCR:
  35 A ... 100 A: 50 kA
- ENEC, UL and cUL approval

Typical applications

- Frequency converters for motor drives, e.g.
  - elevators
  - pumps
  - conveyor systems
  - HVAC systems (heating, ventilation and air conditioning)
- Power supplies
- Textile machines, packaging machines, machine-tools

Terminals

- Finger-safe terminals

Marking

Marking on component:
Manufacturer's logo, ordering code, rated voltage, rated current, rated temperature, climatic category, date code, approvals, SCCR value

Minimum data on packaging:
Manufacturer's logo, ordering code, quantity, date code

1) According to IEC 60529

Typical circuit diagrams

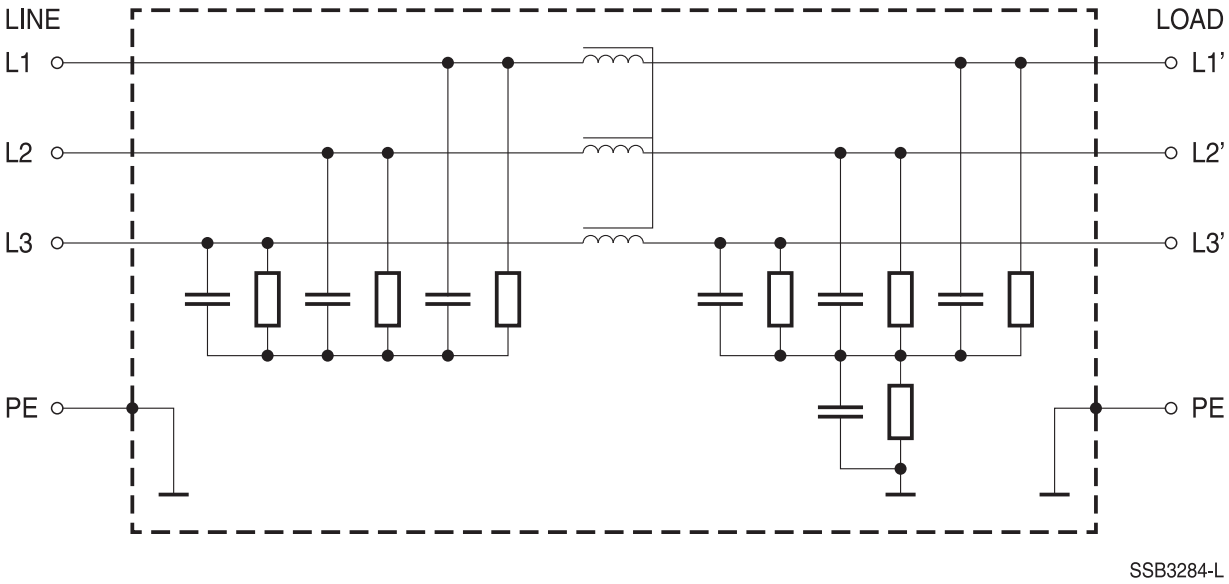

Technical data and measuring conditions

Rated voltage V_R	300/520 V AC (50/60 Hz)
Rated voltage for IT mains supply	265/460 V AC (50/60 Hz) See also chapter "Technical information", section 8 "Energy supply networks".
Rated current I_R	Referred to 50 °C rated temperature
Test voltage V_{test}	2236 V DC, 2 s (line/line) 2720 V DC, 2 s (line/case)
Overload capability (thermal)	1.5 · I_R for 3 min per hour or 2.5 · I_R for 30 s per hour
Leakage current I_{LK}	At V_R and 50 Hz
Climatic category (IEC 60068-1)	25/100/21 (-25 °C/+100 °C/21 days damp heat test)
Approvals	IEC 60939, UL 1283, CSA C22.2 No.8

Characteristics and ordering codes

I_R	Terminal cross section	I_{LK}	R_{typ}	Approx. weight	Ordering code	Approvals		
A	mm^2	mA	mΩ	kg				
V_R = 300/520 V AC								
10	4	3.1	5.5	0.4	B84143A0010R107	x	x	x
20	4	3.1	3.3	0.6	B84143A0020R107	x	x	x
35	10	3.4	1.7	0.9	B84143A0035R107	x	x	x
50	25	3.4	1.1	1.4	B84143A0050R107	x	x	x
65	25	3.4	0.94	1.9	B84143A0065R107	x	x	x
80	25	3.4	0.60	2.4	B84143A0080R107	x	x	x
100	50	3.4	0.48	2.9	B84143A0100R107	x	x	x

x = Approval granted

SCCR values

- 50 kA for 35 A ... 65 A types, nominal values of circuit breaker 80 A and $V_{[L–PE\ /\ L–L]}$ min. 347/600 V
- 50 kA for 80 A ... 100 A types, nominal values of circuit breaker 125 A and $V_{[L–PE\ /\ L–L]}$ min. 347/600 V

Dimensional drawings

B84143A0010R107, B84143A0020R107 (10 A, 20 A)

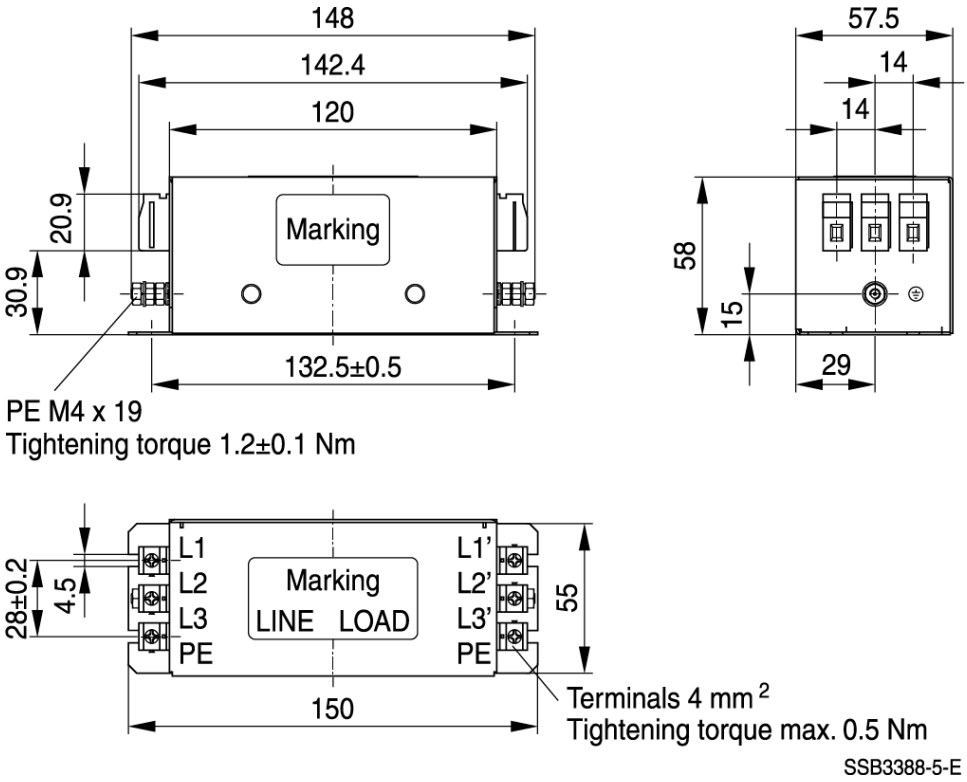

General tolerances according to ISO 2768-cL
Dimensions in mm

B84143A0035R107 (35 A)

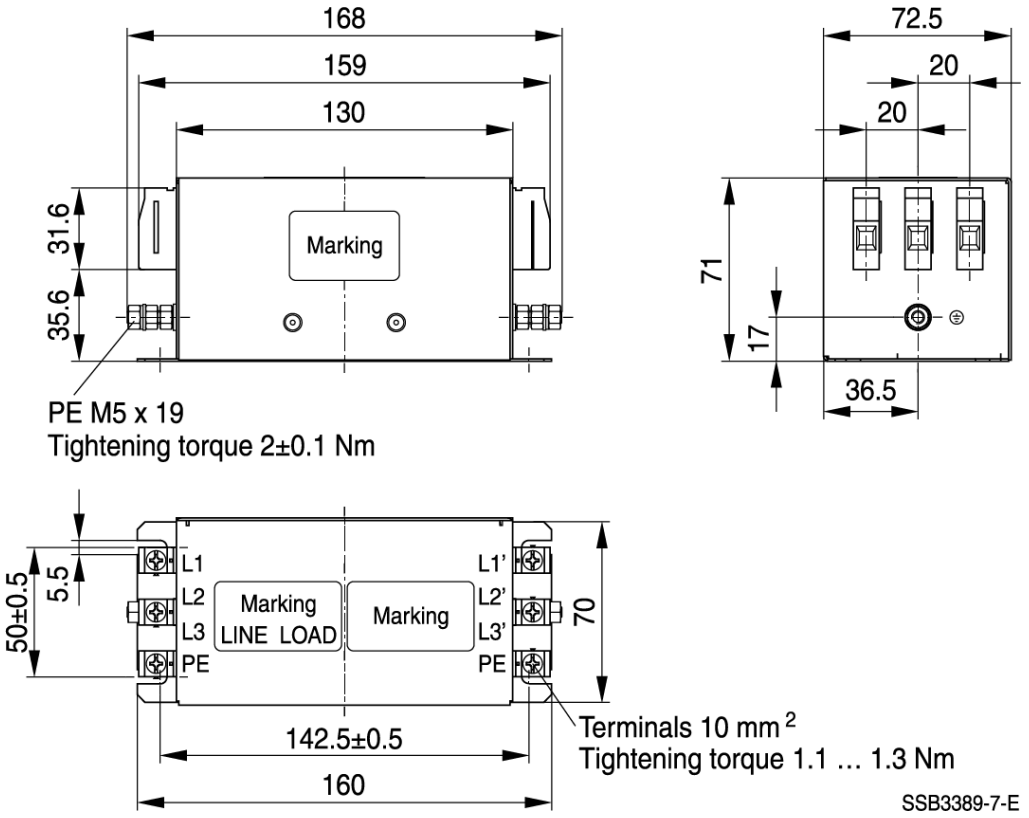

General tolerances according to ISO 2768-cL
Dimensions in mm

B84143A0050R107, B84143A0065R107 (50 A, 65 A)

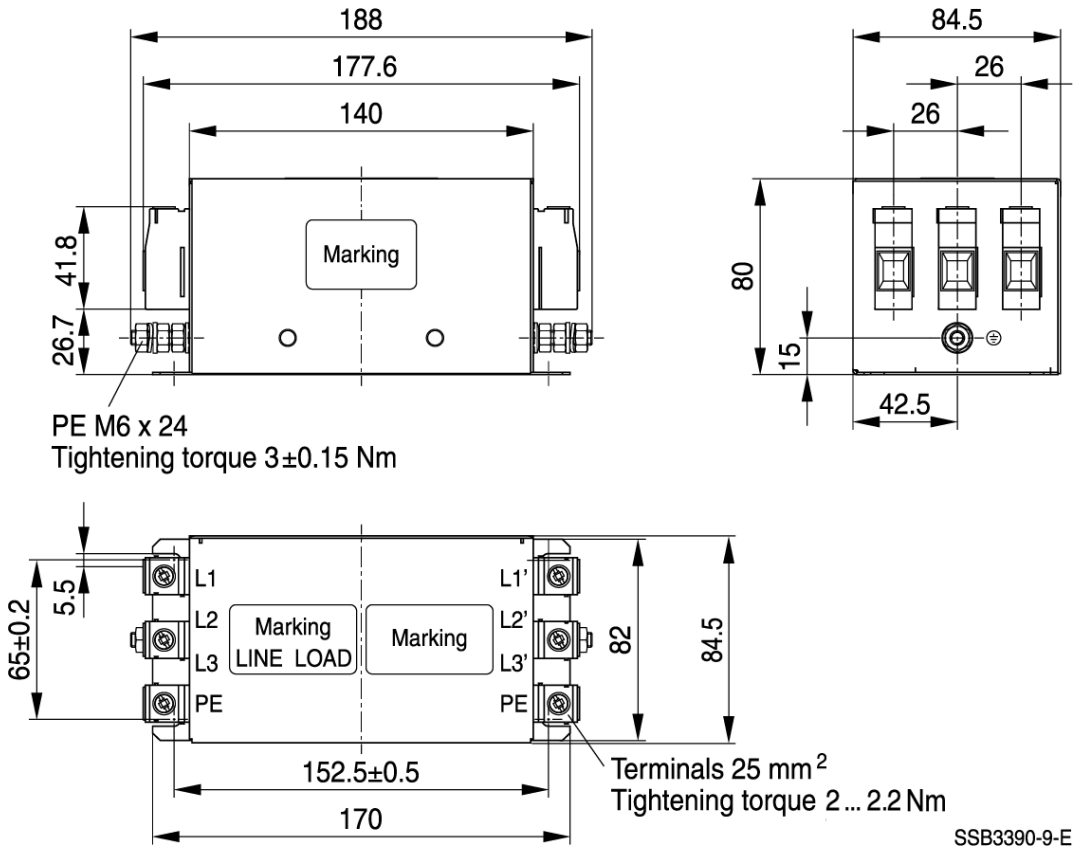

General tolerances according to ISO 2768-cL
Dimensions in mm

B84143A0080R107 (80 A)

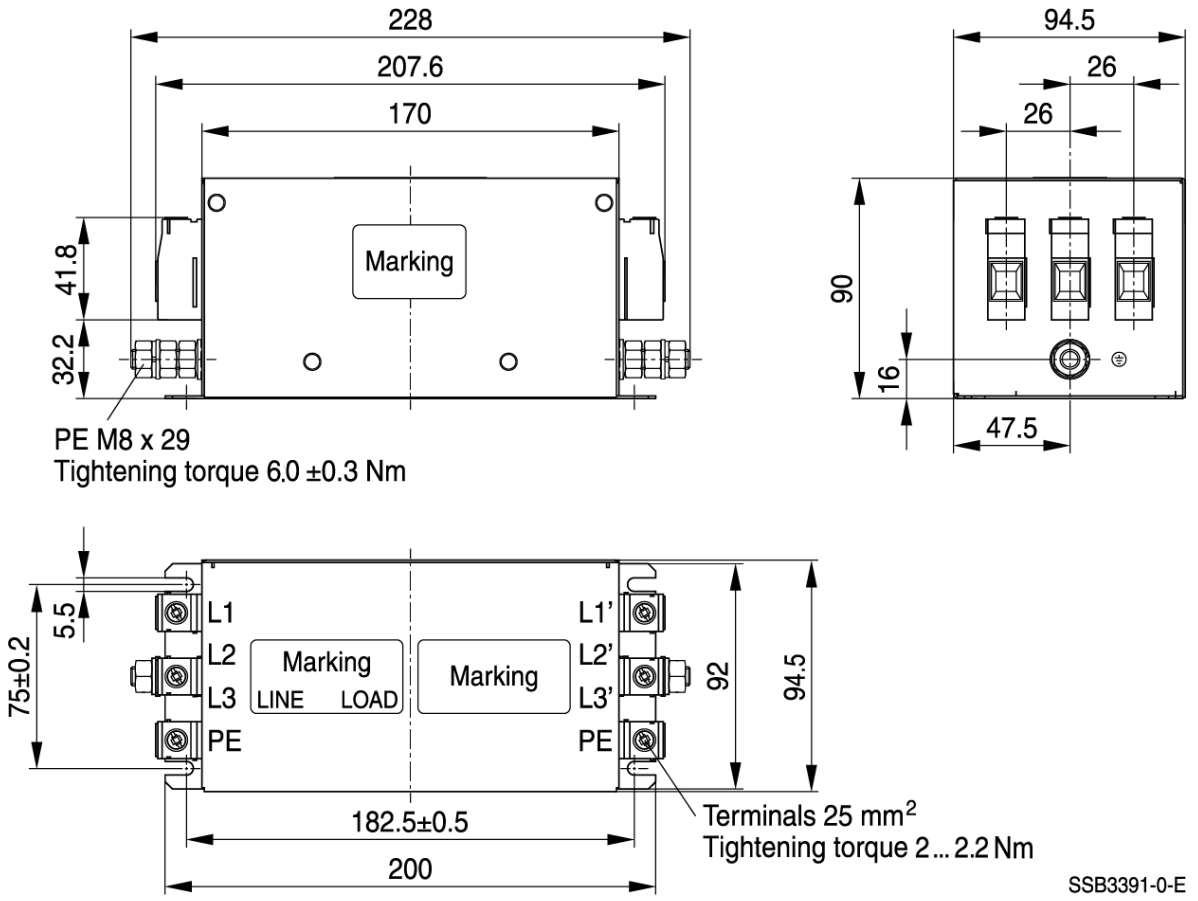

General tolerances according to ISO 2768-cL
Dimensions in mm

B84143A0100R107 (100 A)

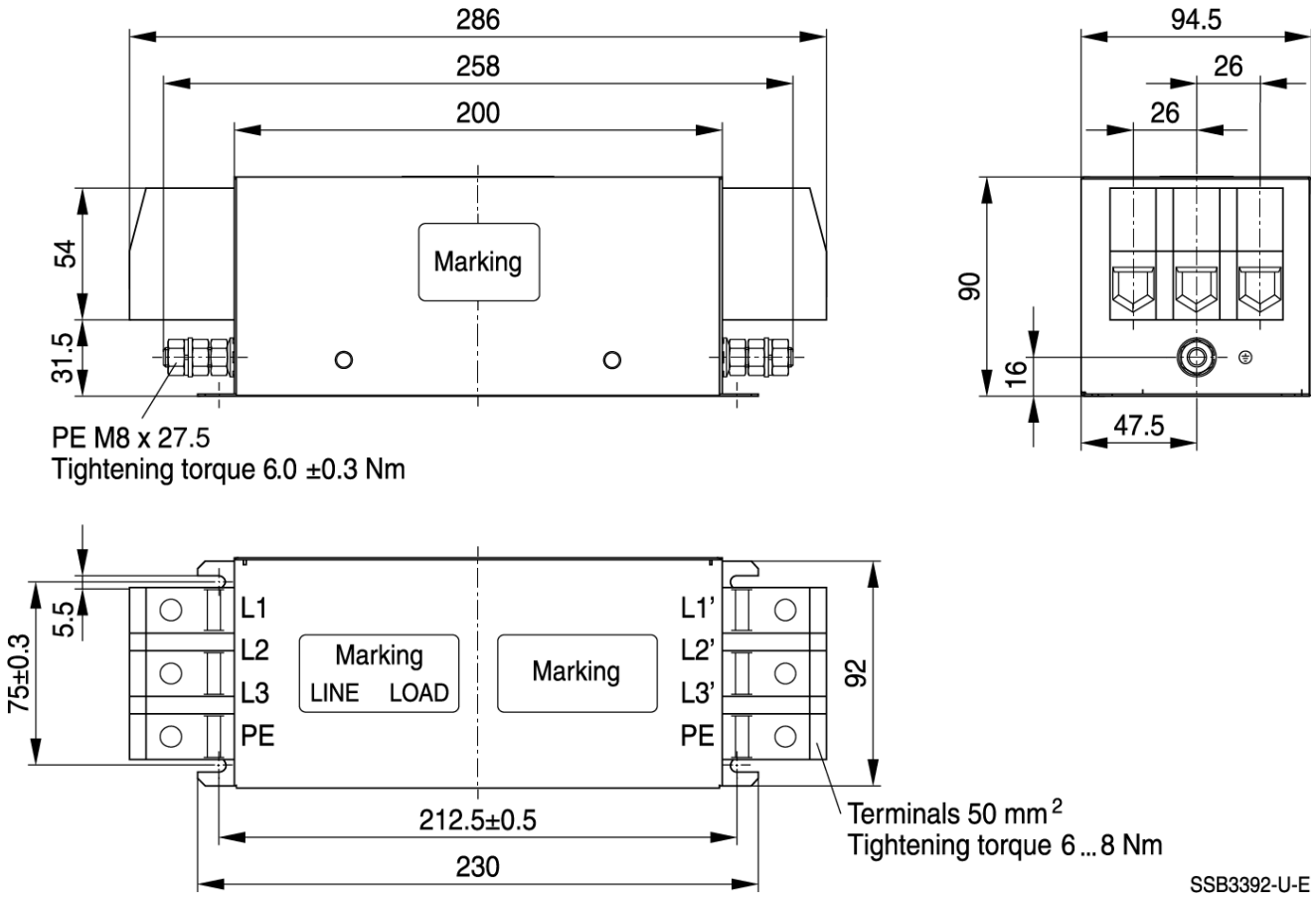

General tolerances according to ISO 2768-cL
Dimensions in mm

Insertion loss (typical values at Z = 50 Ω)

——————— unsymmetrical, adjacent branches terminated
—·—·—·—·—·— common mode, all branches in parallel (asymmetrical)
– – – – – – – – – differential mode (symmetrical)

Filters for 10 A

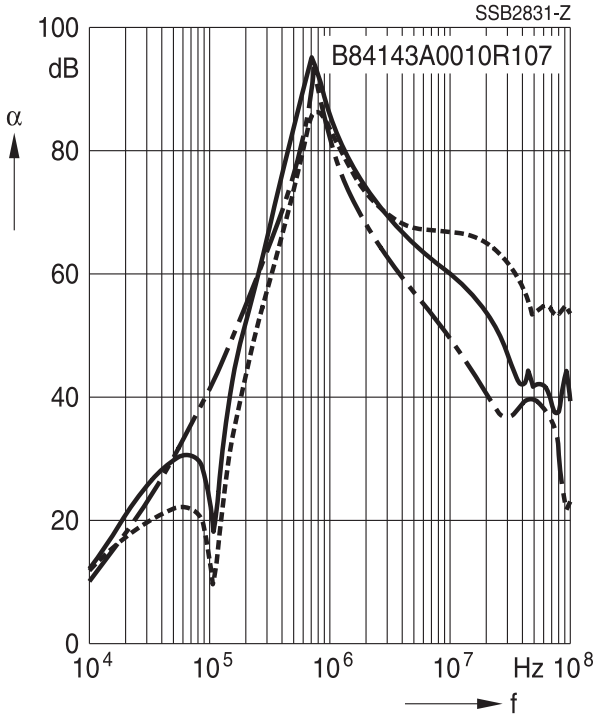

Filters for 20 A

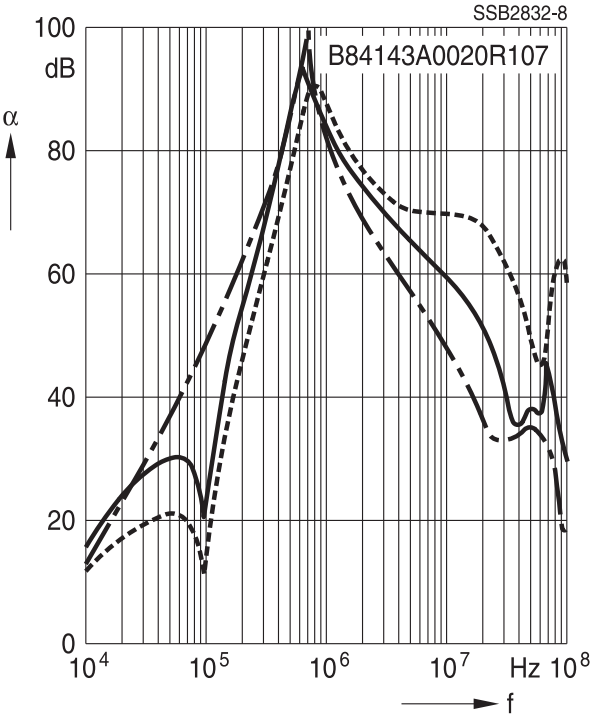

Filters for 35 A

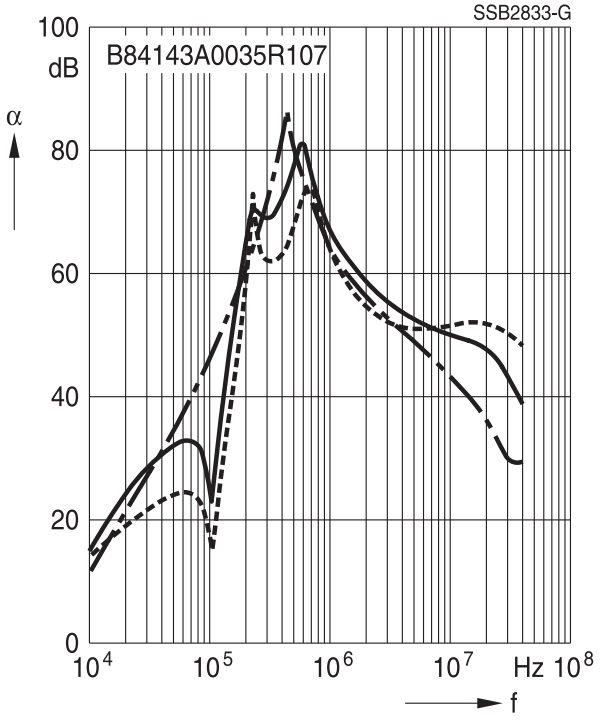

Filters for 50 A

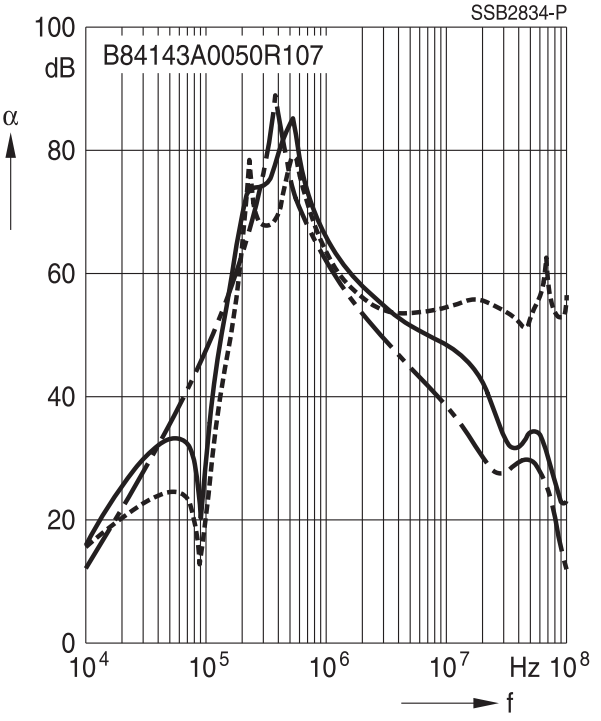

Insertion loss (typical values at Z = 50 Ω)

——————— unsymmetrical, adjacent branches terminated
—·—·—·—·—·— common mode, all branches in parallel (asymmetrical)
– – – – – – – – – differential mode (symmetrical)

Filters for 65 A

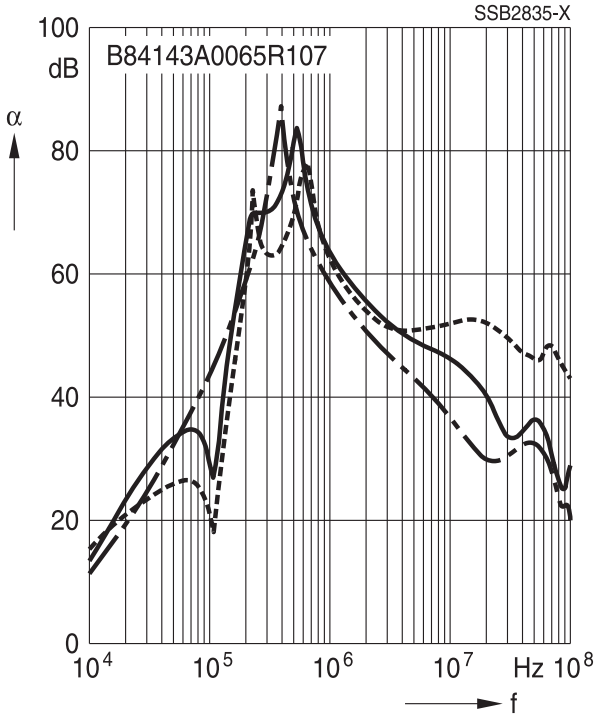

Filters for 80 A

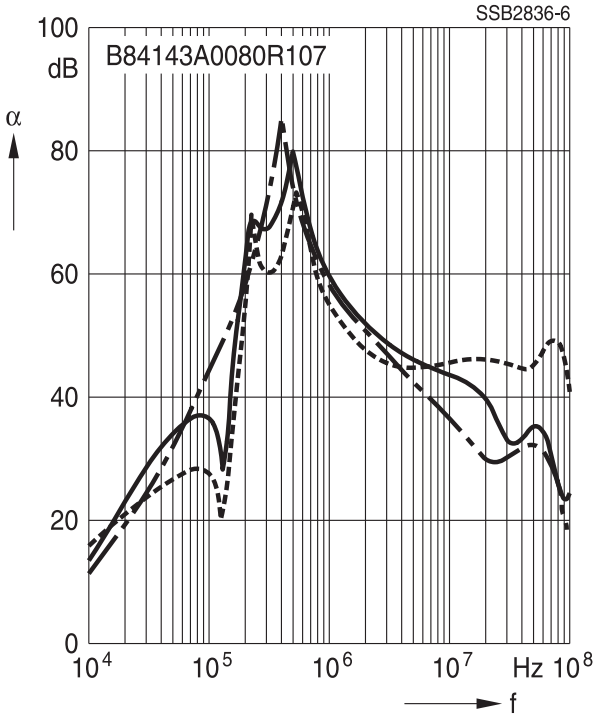

Filters for 100 A

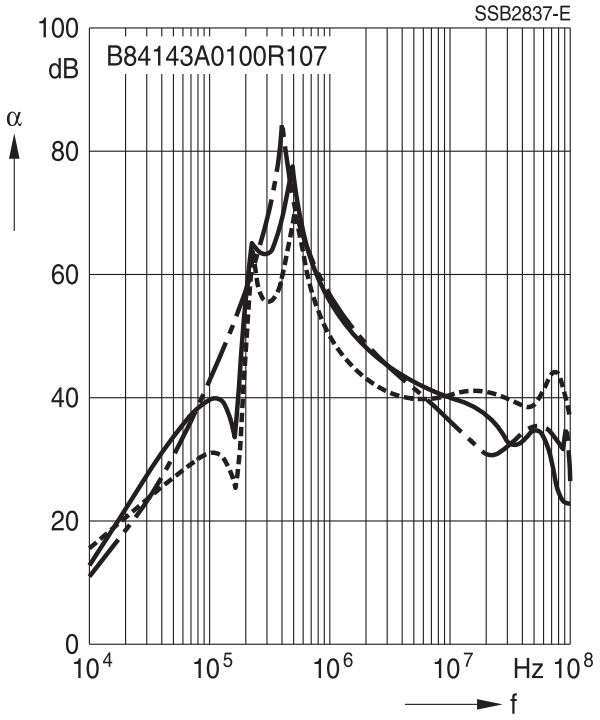

Cautions and warnings

Please read all warning and safety notes carefully before installing the filter and putting it into operation (see ⚠). The same applies to the warning signs on the filter. Please ensure that the signs are not removed nor their legibility impaired by external influences.

Death, serious bodily injury and substantial material damage to equipment may occur if the appropriate safety measures are not carried out or the warnings in the text are not observed.

Using according to the terms

The filters may be used only for their intended application within the specified values in low-voltage networks in compliance with the instructions given in the data sheets and the data book. The conditions at the place of application must comply with all specifications for the filter used.

⚠ Warning

- It shall be ensured that only qualified persons (electricity specialists) are engaged on work such as planning, assembly, installation, operation, repair and maintenance. They must be provided with the corresponding documentation.
- Danger of electric shock. Filters contain components that store an electric charge. Dangerous voltages can continue to exist at the filter terminals for longer than five minutes even after the power has been switched off.
- The protective earth connections shall be the first to be made when the filter is installed and the last to be disconnected. Depending on the magnitude of the leakage currents, the particular specifications for making the protective earth connection must be observed.
- Impermissible overloading of the filter or filter, such as with circuits able to cause resonances, impermissible voltages at higher frequencies etc. can lead to bodily injury and death as well as cause substantial material damages (e.g. destruction of the filter housing).
- Filters must be protected in the application against impermissible exceeding of the rated currents by overcurrent protective devices.
- In case of leakage currents >3.5 mA you shall mount the PE conductor stationary with the required cross section before beginning of operation and save it against disconnecting. For leakage currents I_L [1] ≤10 mA the PE conductor must have a KU value[2] of 4.5[3]; for leakage currents I_L >10 mA the PE conductor must have a KU value of 6[4].
- Output chokes and output filters must be protected in the application against impermissible exceeding of the component temperature.
- The converter output frequency must be within the specified range to avoid resonances and uncontrolled warming of the output chokes and output filters.
- Because the product can become very hot during operation, there is the risk of burns if touched. The product can remain hot for some time after the power is switched off!

1) I_L = leakage current let-go
2) The KU value (symbol KU) is a classification parameter of safety-referred failure types designed to ensure protection against hazardous body currents and excessive heating.
3) A value of KU = 4.5 with respect to interruptions is attained with: a) permanently connected protective earth connection ≥1.5 mm² and b) a protective earth connection ≥2.5 mm² via connectors for industrial equipment (IEC 60309-2)
4) KU = 6 with respect to interruptions is achieved for fixed-connection lines ≥10 mm² where the type of connection and installation correspond to the requirements for PEN conductors as specified in relevant standards.

The table below summarizes the safety instructions that must be observed without fail. A detailed description can be found in the relevant chapters of the databook.

Topic	Instructions	Reference chapter (data book), paragraph
Selecting a filter	When selecting a filter, it is mandatory to observe the rated data of the equipment (such as its rated input current, rated voltage, harmonic content etc.) as well as the derating instructions in Chapters 9 and 10.	Selection guide for converter filters
Rated voltage	When power distribution systems deviating from the symmetric TN-S system is to check the suitability of the filters and the allowed voltages including the fault cases.	Power distribution systems, 7
Protection from residual voltages Discharge resistors	Active parts must be discharged within 5 s to a voltage of less than 60 V (or 50 µC). If this limit cannot be observed due to the operating mode, the hazardous point must be permanently marked in a clearly visible way.	Safety regulations, 6.1
	Filters which are not permanently connected (e.g. when the test voltage is applied to the filter at the incoming goods inspection) must be discharged after the voltage has been switched off.	Safety regulations, 6.2
Installing and removing of filters Installation	When installing and removing our filters, a voltage-free state must be set up and secured with observance of the five safety rules described in EN 50110-1.	Safety regulations, 6.4
Use in IT systems	The special features of the IT system ("first fault case" and other fault cases) shall be observed.	Power distribution system (network types), 7.6
Safety notes on leakage currents	The filter leakage currents specified in the data book are intended for user information only.The maximum leakage current of the entire electrical equipment or appliance has to be limited for safety reasons. Please obtain the applicable limits for your application from the relevant regulations, provisions and standards.	Leakage current, 8.4 Leakage current, 8.6
Voltage derating Hazards caused by overloading the filters	If the permissible limits for the higher-frequency voltages at the filter are exeeded, the filter may be damaged or destroyed.	Voltage derating, 9.8
Current derating at elevated ambient temperatures	Non-observance of the current derating may lead to overheating and consequently represents a fire hazard.	Current derating, 10.1

Topic	Instructions	Reference chapter (data book), paragraph
Protective earth connection at operating currents >250 A	For operating currents greater than 250 A, we recommend the PE connection to be set up between the feed (filter: line) and output (filter: load) not via the PE terminal bolt in the filter housing.	Mounting instructions, point 2
Mounting position	Note the mounting position of the filters! It must always be ensured that natural convection is not impaired.	Mounting instructions, point 13
Long motor cables	Long motor cables cause parasitic currents in the installation. The cable lengths indicated for the output chokes and output filters serve for orientation. The user must check the technical parameters and especially the choke temperatures for the respective application.	Mounting instructions, point 15

Display of ordering codes for TDK Electronics products

The ordering code for one and the same product can be represented differently in data sheets, data books, other publications, on the company website, or in order-related documents such as shipping notes, order confirmations and product labels. **The varying representations of the ordering codes are due to different processes employed and do not affect the specifications of the respective products**.
Detailed information can be found on the Internet under
www.tdk-electronics.tdk.com/orderingcodes.

Symbols and terms

Symbol	English	German
α	Insertion loss	Einfügungsdämpfung
C_R	Rated capacitance	Bemessungskapazität
C_X	Capacitance X capacitor	Kapazität X-Kondensator
C_Y	Capacitance Y capacitor	Kapazität Y-Kondensator
ΔV	Voltage drop (input to output)	Spannungsabfall (Eingang zu Ausgang)
dv/dt	Rate of voltage rise	Spannungsanstiegsgeschwindigkeit
f	Frequency	Frequenz
f_M	Converter output frequency	Motorfrequenz
f_P	Pulse frequency	Pulsfrequenz
f_R	Rated frequency	Bemessungsfrequenz
f_{res}	Resonant frequency	Resonanzfrequenz
I_C	Current through capacitor	Strom durch Kondensator
I_{LK}	Filter leakage current	Filter-Ableitstrom
I_{max}	Maximum current	Maximalstrom
I_N	Nominal current	Nennstrom
I_{op}	Operating current (design current)	Betriebsstrom
I_{pk}	Rated peak withstand current	Bemessungsstoßstromfestigkeit
I_q	Capacitive reactive current	Kapazitiver Blindstrom
I_R	Rated current	Bemessungsstrom
I_S	Interference current	Störstrom
L	Inductance	Induktivität
L_R	Rated inductance	Bemessungsinduktivität
L_{stray}	Stray inductance	Streuinduktivität
P_L	Power loss	Verlustleistung
R	Resistance	Widerstand
R_{is}	Insulation resistance	Isolationswiderstand
R_{typ}	DC resistance, typical value	Gleichstromwiderstand typisch
T_A	Ambient temperature	Umgebungstemperatur
T_{max}	Upper category temperature	Obere Kategorietemperatur
T_{min}	Lower category temperature	Untere Kategorietemperatur
T_R	Rated temperature	Bemessungstemperatur
V_{eff}	RMS voltage	Effektivspannung
V_K	Voltage drop	Spannungsabfall
v_k	Referred voltage drop in %	Bezogener Spannungsabfall in %
V_{LE}	Voltage line to earth; voltage line to ground	Spannung Phase zu Erdpotential
V_N	Nominal voltage	Nennspannung
V_R	Rated voltage	Bemessungsspannung
V_{peak}	Peak voltage	Spitzenspannung
V_{test}	Test voltage	Prüfspannung

Symbol	English	German
V_X	Voltage over X capacitor	Spannung über X-Kondensator
V_Y	Voltage over Y capacitor	Spannung über Y-Kondensator
X_L	Inductive reactance	Induktiver Blindwiderstand
Z	Impedance	Scheinwiderstand
|Z|	Impedance, absolute value	Scheinwiderstand (Betragswert)

Important notes

The following applies to all products named in this publication:

1. Some parts of this publication contain **statements about the suitability of our products for certain areas of application**. These statements are based on our knowledge of typical requirements that are often placed on our products in the areas of application concerned. We nevertheless expressly point out **that such statements cannot be regarded as binding statements about the suitability of our products for a particular customer application.** As a rule, we are either unfamiliar with individual customer applications or less familiar with them than the customers themselves. For these reasons, it is always ultimately incumbent on the customer to check and decide whether a product with the properties described in the product specification is suitable for use in a particular customer application.
2. We also point out that **in individual cases, a malfunction of electronic components or failure before the end of their usual service life cannot be completely ruled out in the current state of the art, even if they are operated as specified.** In customer applications requiring a very high level of operational safety and especially in customer applications in which the malfunction or failure of an electronic component could endanger human life or health (e.g. in accident prevention or life-saving systems), it must therefore be ensured by means of suitable design of the customer application or other action taken by the customer (e.g. installation of protective circuitry or redundancy) that no injury or damage is sustained by third parties in the event of malfunction or failure of an electronic component.
3. **The warnings, cautions and product-specific notes must be observed**.
4. In order to satisfy certain technical requirements, **some of the products described in this publication may contain substances subject to restrictions in certain jurisdictions (e.g. because they are classed as hazardous)**. Useful information on this will be found in our Material Data Sheets on the Internet (www.tdk-electronics.tdk.com/material). Should you have any more detailed questions, please contact our sales offices.
5. We constantly strive to improve our products. Consequently, **the products described in this publication may change from time to time**. The same is true of the corresponding product specifications. Please check therefore to what extent product descriptions and specifications contained in this publication are still applicable before or when you place an order.
   We also **reserve the right to discontinue production and delivery of products**. Consequently, we cannot guarantee that all products named in this publication will always be available. The aforementioned does not apply in the case of individual agreements deviating from the foregoing for customer-specific products.
6. Unless otherwise agreed in individual contracts, **all orders are subject to our General Terms and Conditions of Supply**.

Important notes

7. **Our manufacturing sites serving the automotive business apply the IATF 16949 standard**. The IATF certifications confirm our compliance with requirements regarding the quality management system in the automotive industry. Referring to customer requirements and customer specific requirements (“CSR”) TDK always has and will continue to have the policy of respecting individual agreements. Even if IATF 16949 may appear to support the acceptance of unilateral requirements, we hereby like to emphasize that **only requirements mutually agreed upon can and will be implemented in our Quality Management System.** For clarification purposes we like to point out that obligations from IATF 16949 shall only become legally binding if individually agreed upon.
8. The trade names EPCOS, CarXield, CeraCharge, CeraDiode, CeraLink, CeraPad, CeraPlas, CSMP, CTVS, DeltaCap, DigiSiMic, ExoCore, FilterCap, FormFit, LeaXield, MiniBlue, MiniCell, MKD, MKK, ModCap, MotorCap, PCC, PhaseCap, PhaseCube, PhaseMod, PhiCap, PowerHap, PQSine, PQvar, SIFERRIT, SIFI, SIKOREL, SilverCap, SIMDAD, SiMic, SIMID, SineFormer, SIOV, ThermoFuse, WindCap, XieldCap are **trademarks registered or pending** in Europe and in other countries. Further information will be found on the Internet at www.tdk-electronics.tdk.com/trademarks.

Release 2020-06