General

The filter are outstanding for their big field of applications, because the filters are designed with single lines without coupling effects. By using of single chokes instead of current compensated chokes the insertion loss values will not be reduced at all operating current conditions, also at operating of artificial mains network (AMN) or other equipment with high leakage currents.

Design

The electric components are enclosed in a RF–tight stainless steel housing. Screw–type conduit fittings are used for the cable entry. The RF–tight covering of the opening for the connections is obtained by means of specially formed covers. Neutral conductor and conductor are connected via threaded bolts. The space around the fixing holes is left unpainted in order to ensure good RF contacting to metal areas (ground).

Protective measures

Due to the high capacitances between conductors and safety conductor, protective measures in accordance with VDE 0100 and VDE 0875 (additional ground connection) are necessary if the relevant VDE specifications do not include adequate measures.
In order to discharging of the capacitors after turning off, resistors are incorporated into the filter.

General technical data

Rated Voltage U_R	440/250 V	Line / Line Line / Ground
Rated frequency f_R	50 / 60 Hz	
Rated current I_R	see page 2	refered to +40°C ambient temperature
Test voltage	1200 V dc, 2 sec. 1200 V dc, 2 sec.	Line / Line Line / Ground
DC resistance R_{DC}	see page 2	each line
Power dissipation P_V	see page 2	at rated current
Voltage drop / line ΔU	< 1 %	of rated voltage 440 / 250 V
Cap. current / line I_B	see page 2	at 230V / 50Hz
Max. allowed harmonic dist. (THD)	8 %	according to EN 50160
Permissible ambient temperature	–25 to +40°C	
Approx. weight	see page 2	
Mechanical version	C	with cable glands at both sides or connection by flexible tube
	D	for connecting directly at the mounting wall

The information describes the type of filter and shall not be considered as assured characteristics. terms of delivery and rights to change design resered.

Specific datas and ordering codes

I_R A	100 dB at	R_{DC} mΩ	P_V W	Weight kg	Circuit diagram	I_B A	Mech. version	Mech. dimens.	Ordering code
2 x 16	150 kHz	< 25	< 15	appr. 8	1	0,7	C	1	B84299C2160B001
							D	2	B84299D2160B001
	14 kHz	< 50	< 30	appr. 12	2	1,2	C	3	B84299C2160B003
							D	4	B84299D2160B003
4 x 16	150 kHz	< 50	< 30	appr. 16	3	0,7	C	5	B84299C2160E001
							D	6	B84299D2160E001
	14 kHz	< 50	< 30	appr. 24	4	1,2	C	7	B84299C2160E003
							D	8	B84299D2160E003
2 x 32	150 kHz	< 20	< 40	appr. 15	1	1,0	C	3	B84299C2320B001
							D	4	B84299D2320B001
	14 kHz	< 20	< 40	appr. 20	2	2,7	C	9	B84299C2320B003
							D	10	B84299D2320B003
4 x 32	150 kHz	< 20	< 40	appr. 20	3	1,0	C	7	B84299C2320E001
							D	8	B84299D2320E001
	14 kHz	< 20	< 40	appr. 30	4	2,7	C	11	B84299C2320E003
							D	12	B84299D2320E003

Insertion loss a_e as a function of frequency f (typical values)

test setup

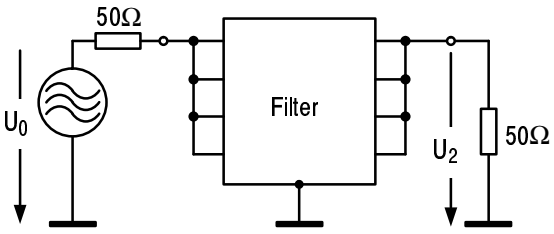

$$a_e = 20 \lg \frac{U_0}{2\,U_2} \quad [dB]$$

asymmetrical test setup acc. to MIL–STD–220A

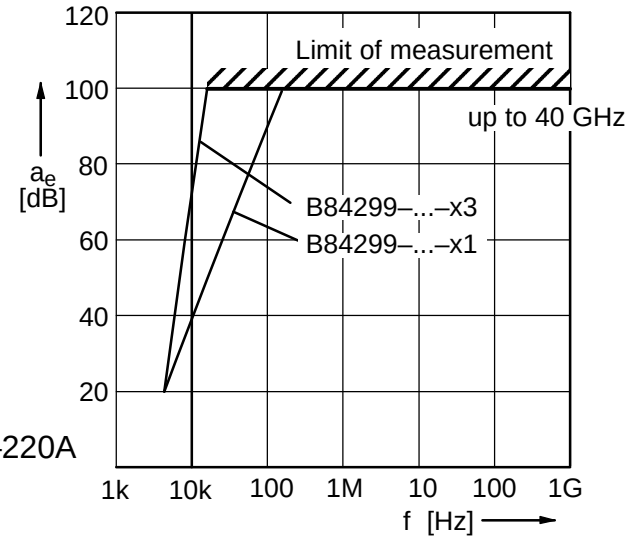

Circuit diagrams

Circuit diagram 1

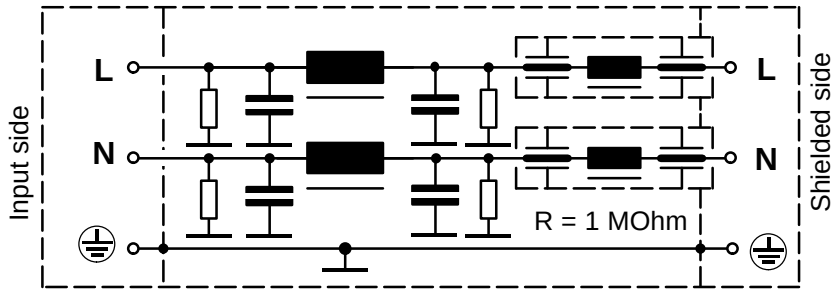

Circuit diagram 2

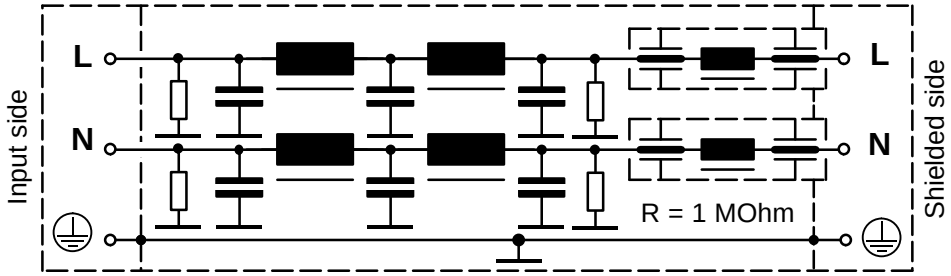

Circuit diagram 3

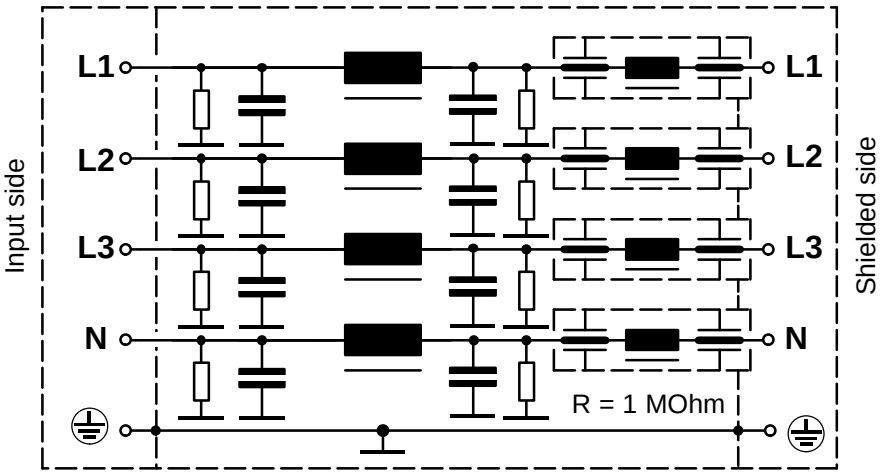

Circuit diagram 4

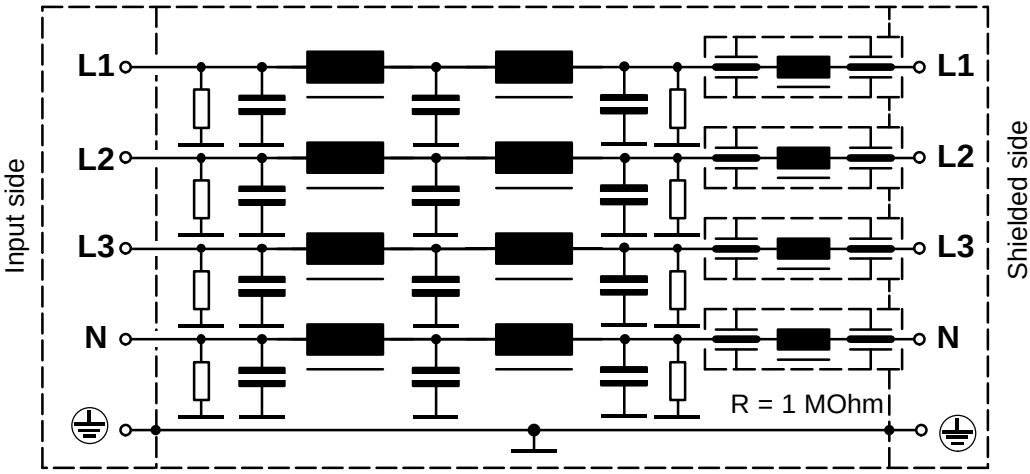

The information describes the type of filter and shall not be considered as assured characteristics. terms of delivery and rights to change design resered.

Mechanical dimensions 1 (B84299C2160B001)

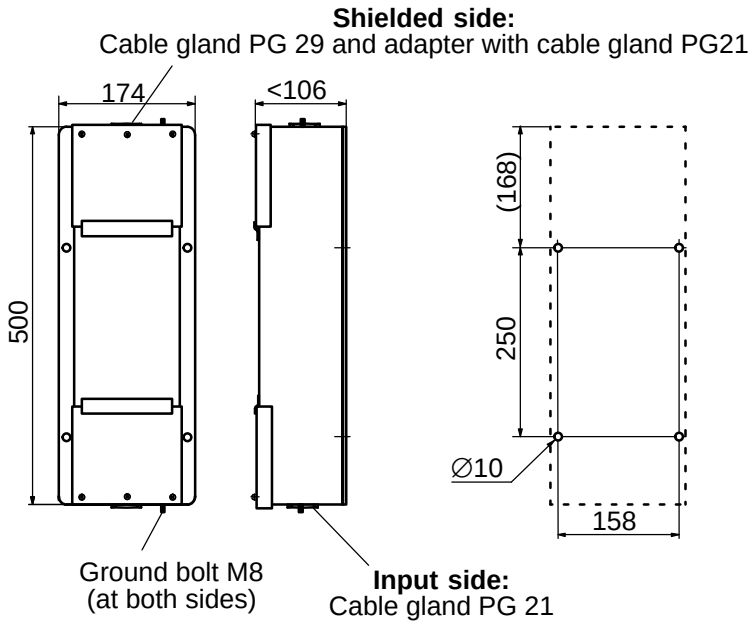

Mechanical dimensions 2 (B84299D2160B001)

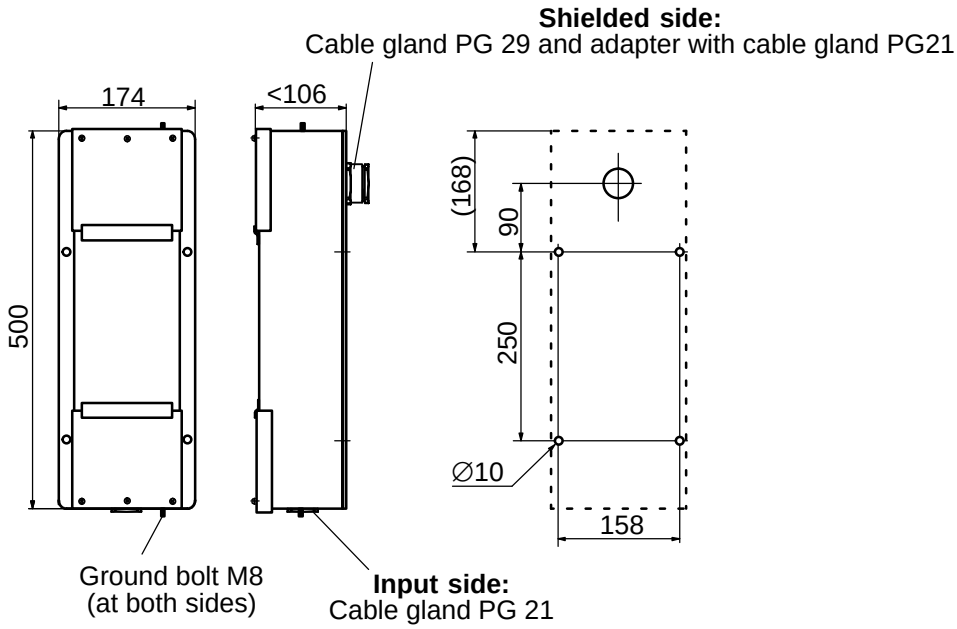

Cable glands PG 29 with indented sealing ring, for cable diameters:
17 to 19 mm, 20 to 22 mm, 23 to 25 mm, 26 to 28 mm

Cable glands PG 21 for cable diameters:
9 to 11 mm, 12 to 14 mm, 15 to 17 mm , 18 to 20 mm

All dimensions in millimeter
Painting acc. to RAL 7035
(lightgrey, semigloss)

Mechanical dimensions 3 (B84299C2160B003, B84299C2320B001)

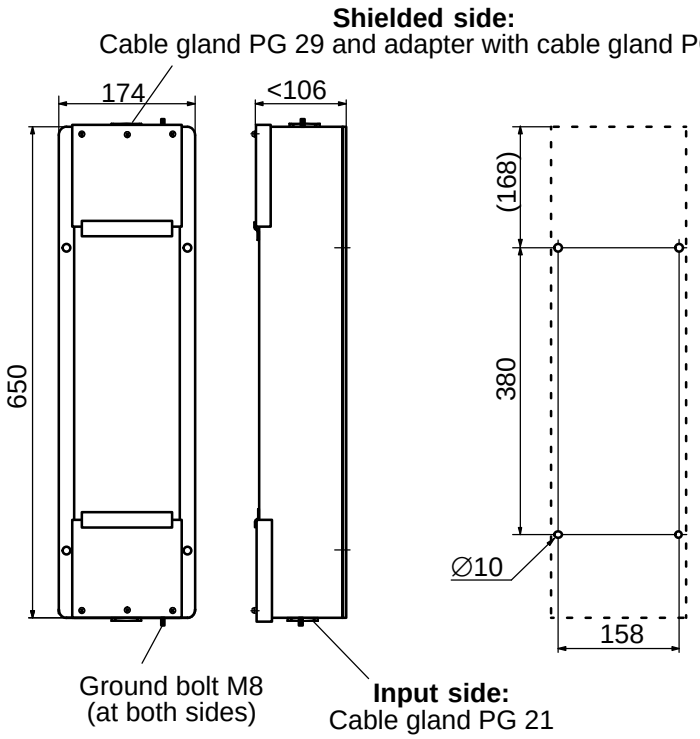

Mechanical dimensions 4 (B84299D2160B003, B84299C2320B001)

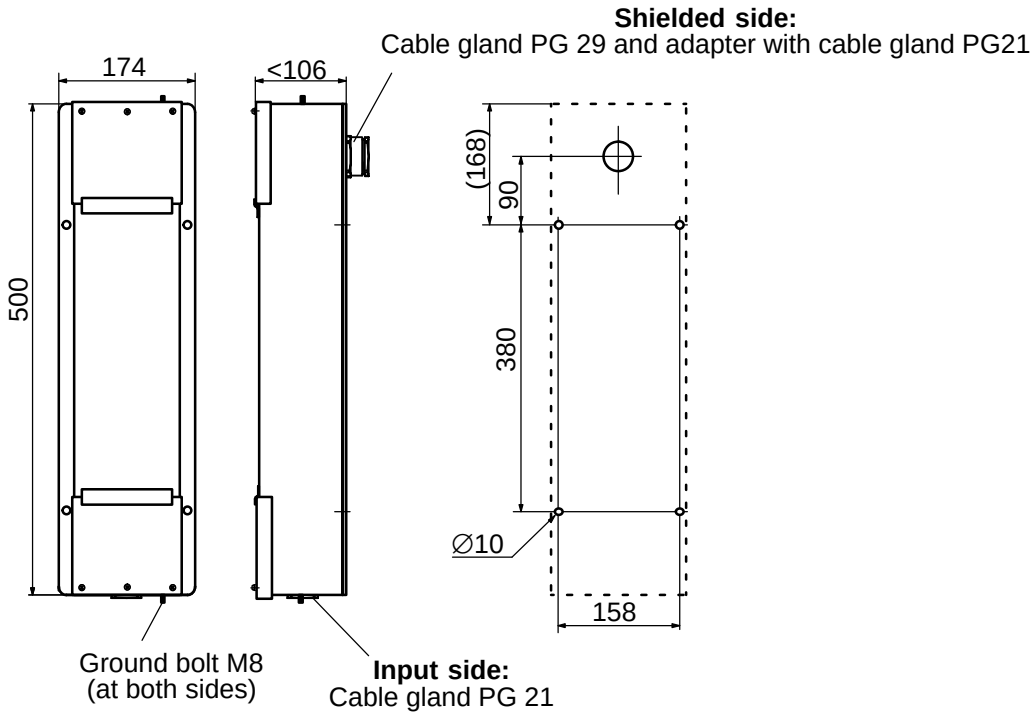

Cable glands PG 29 with indented sealing ring, for cable diameters:
17 to 19 mm, 20 to 22 mm, 23 to 25 mm, 26 to 28 mm

Cable glands PG 21 for cable diameters:
9 to 11 mm, 12 to 14 mm, 15 to 17 mm , 18 to 20 mm

All dimensions in millimeter
Painting acc. to RAL 7035
(lightgrey, semigloss)

The information describes the type of filter and shall not be considered as assured characteristics. terms of delivery and rights to change design resered.

Mechanical dimensions 5 (B84299C2160E001)

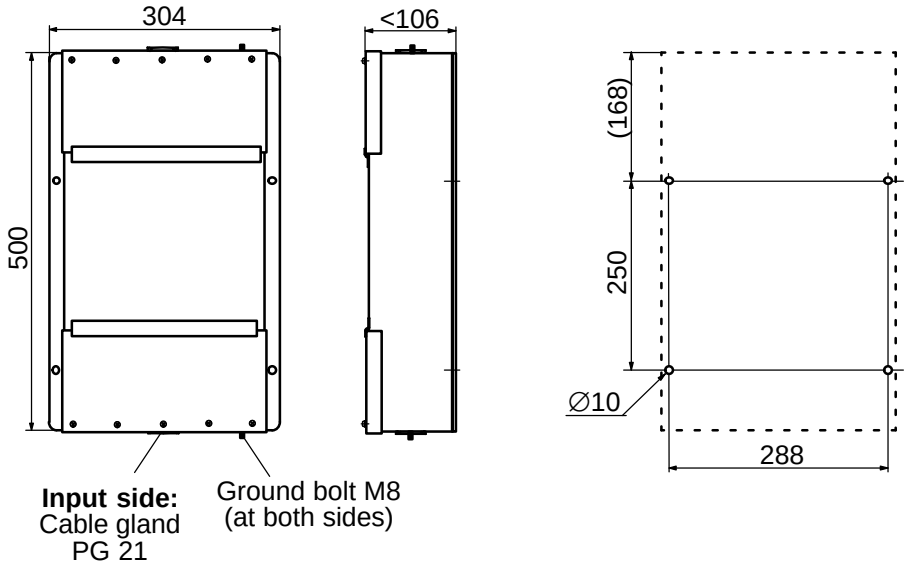

Mechanical dimensions 6 (B84299D2160E001)

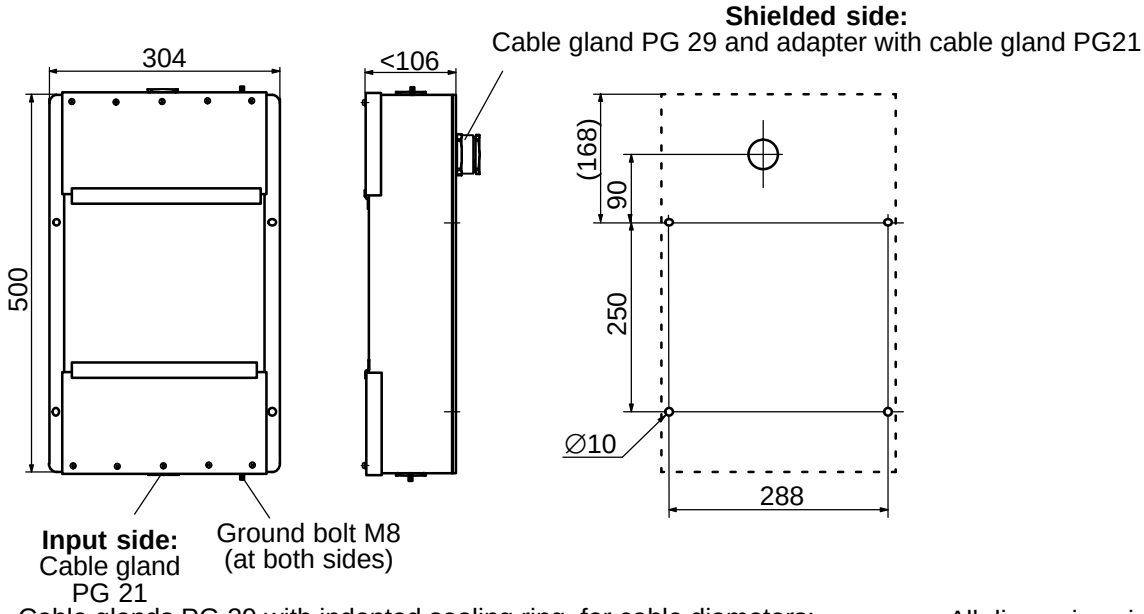

Cable glands PG 29 with indented sealing ring, for cable diameters:
17 to 19 mm, 20 to 22 mm, 23 to 25 mm, 26 to 28 mm

Cable glands PG 21 for cable diameters:
9 to 11 mm, 12 to 14 mm, 15 to 17 mm , 18 to 20 mm

All dimensions in millimeter
Painting acc. to RAL 7035
(lightgrey, semigloss)

The information describes the type of filter and shall not be considered as assured characteristics. terms of delivery and rights to change design resered.

Mechanical dimensions 7 (B84299C2160E003, B84299D2320E001)

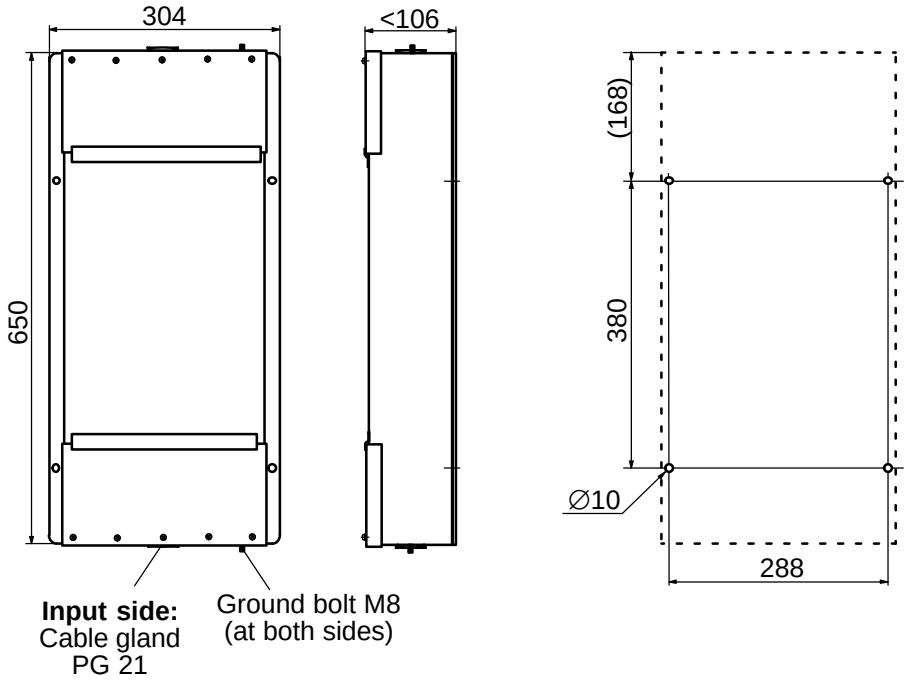

Mechanical dimensions 8 (B84299D2160E003, B84299D2320E001)

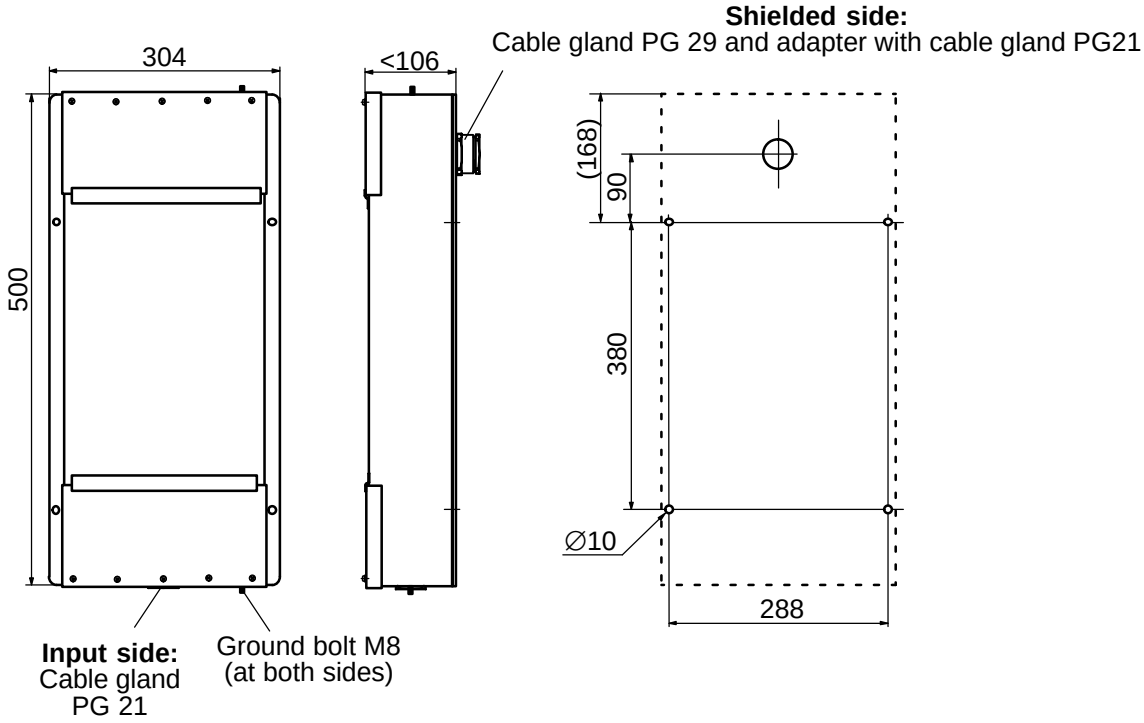

Cable glands PG 29 with indented sealing ring, for cable diameters:
17 to 19 mm, 20 to 22 mm, 23 to 25 mm, 26 to 28 mm

Cable glands PG 21 for cable diameters:
9 to 11 mm, 12 to 14 mm, 15 to 17 mm , 18 to 20 mm

All dimensions in millimeter
Painting acc. to RAL 7035
(lightgrey, semigloss)

The information describes the type of filter and shall not be considered as assured characteristics. terms of delivery and rights to change design resered.

Mechanical dimensions 9 (B84299C2320B003)

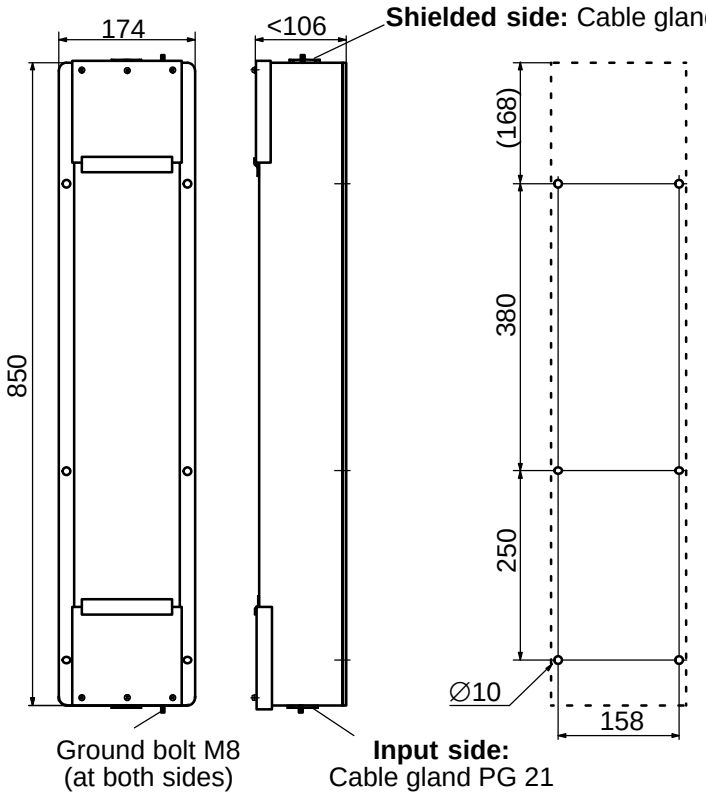

Mechanical dimensions 10 (B84299D2320B003)

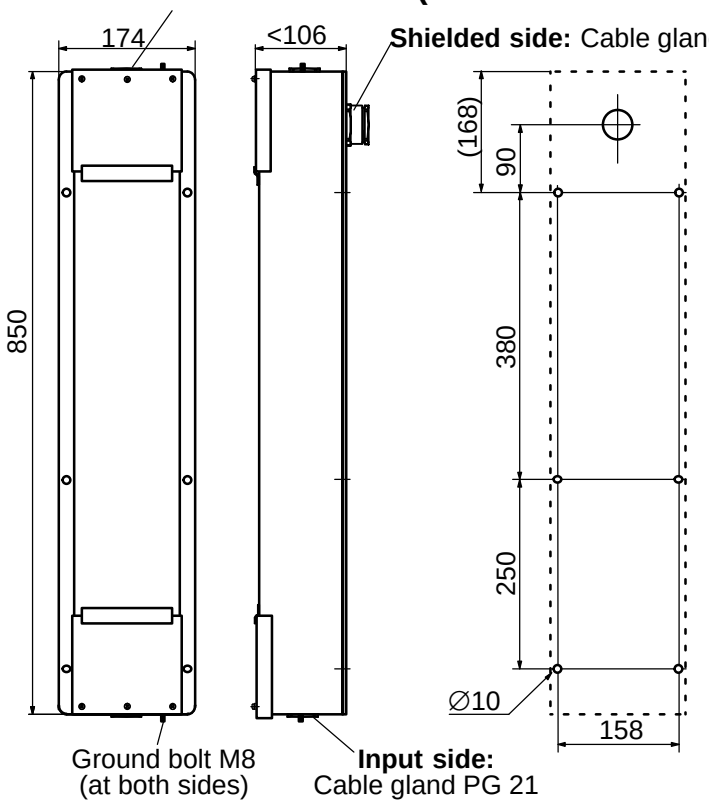

Cable glands PG 29 with indented sealing ring, for cable diameters:
17 to 19 mm, 20 to 22 mm,
23 to 25 mm, 26 to 28 mm

Cable glands PG 21 for cable diameters:
9 to 11 mm, 12 to 14 mm,
15 to 17 mm , 18 to 20 mm

All dimensions in millimeter
Painting acc. to RAL 7035
(lightgrey, semigloss)

The information describes the type of filter and shall not be considered as assured characteristics. terms of delivery and rights to change design resered.

Mechanical dimensions 11 (B84299C2320E003)

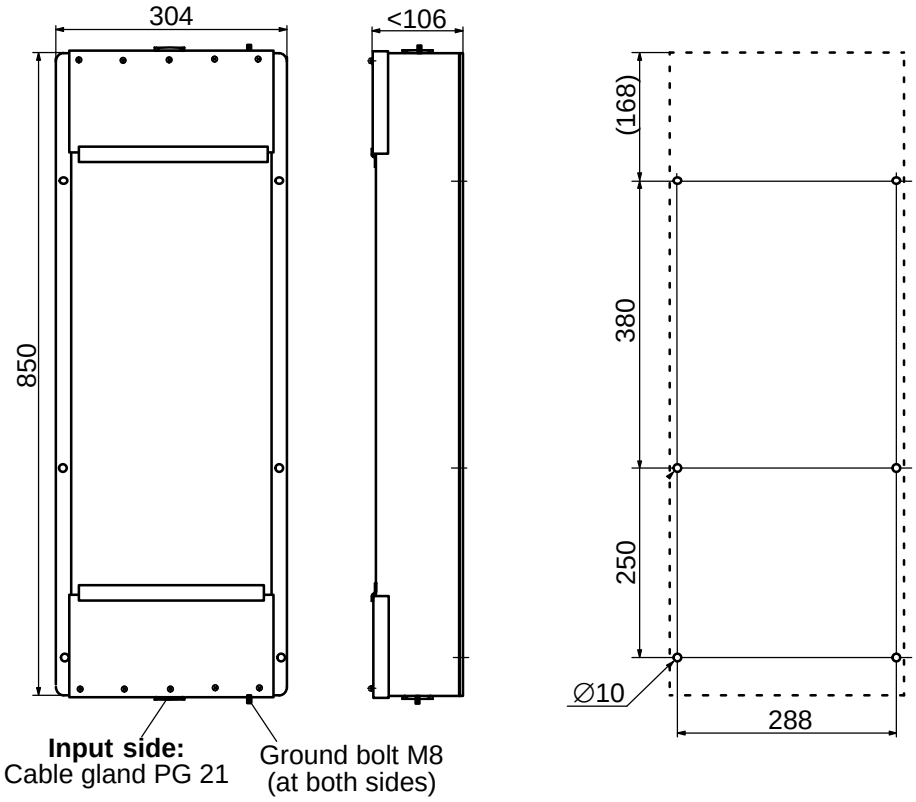

Mechanical dimensions 12 (B84299D2320E003)

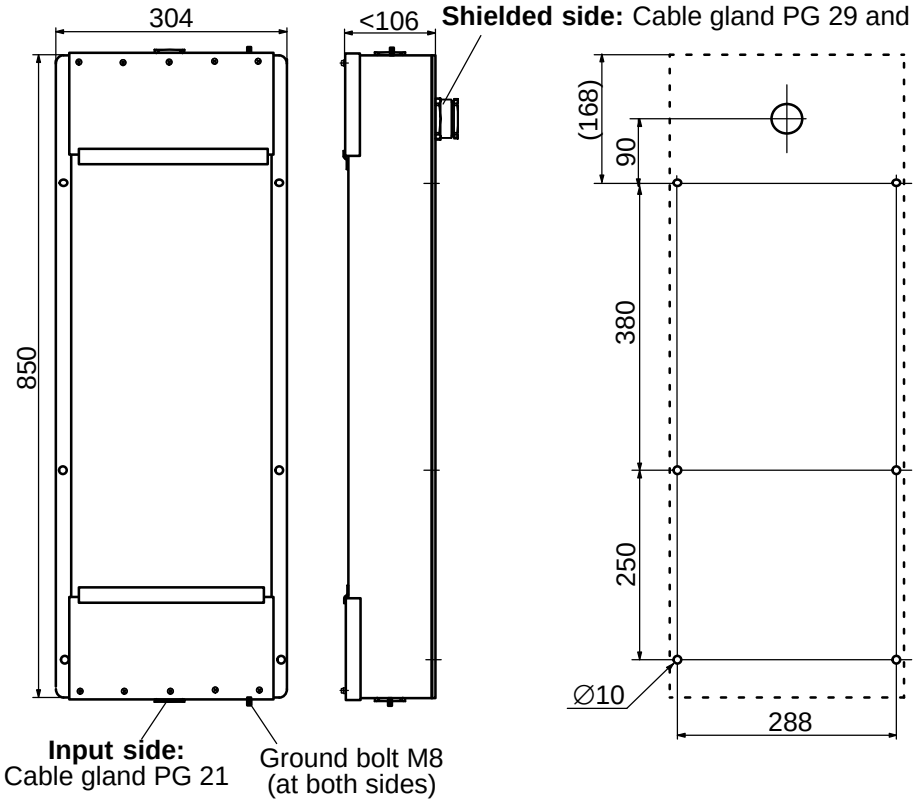

Cable glands PG 29 with indented sealing ring, for cable diameters: 17 to 19 mm, 20 to 22 mm, 23 to 25 mm, 26 to 28 mm

Cable glands PG 21 for cable diameters: 9 to 11 mm, 12 to 14 mm, 15 to 17 mm , 18 to 20 mm

All dimensions in millimeter
Painting acc. to RAL 7035 (lightgrey, semigloss)

The information describes the type of filter and shall not be considered as assured characteristics. terms of delivery and rights to change design resered.

RF–tight connection of the filter at version “D” to the mounting wall

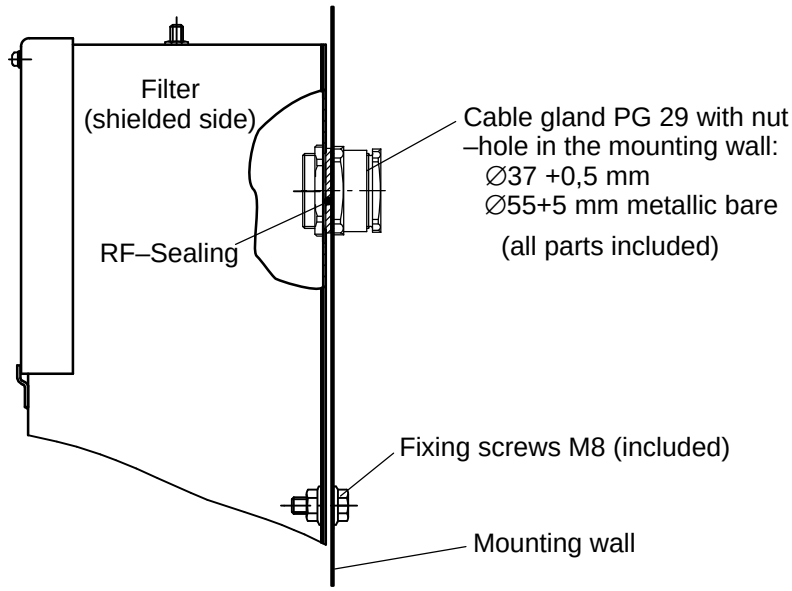

RF–tight connection with flexible conduit diam. 25 mm

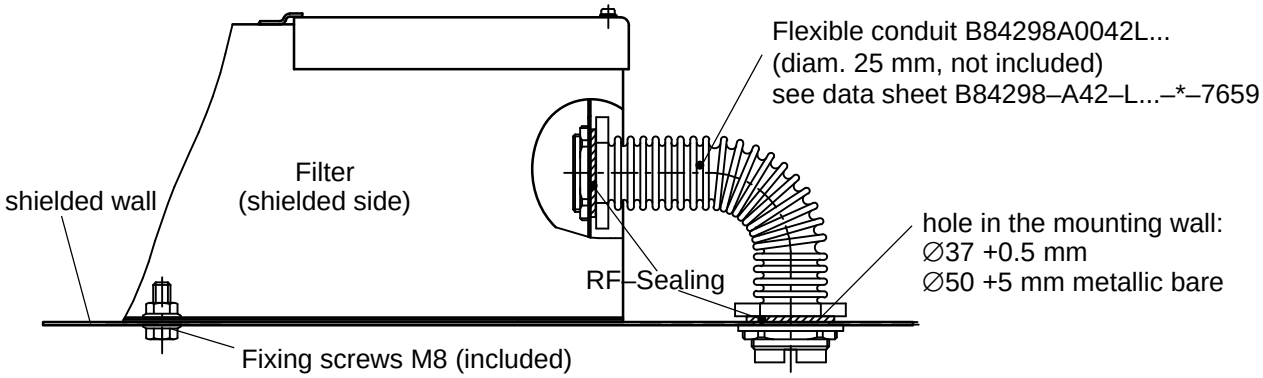

Note: The bending radius of the flexible conduit depends on the used type of cable

Flexible conduit with diam. 25 mm, ordering code B84298A0042L...

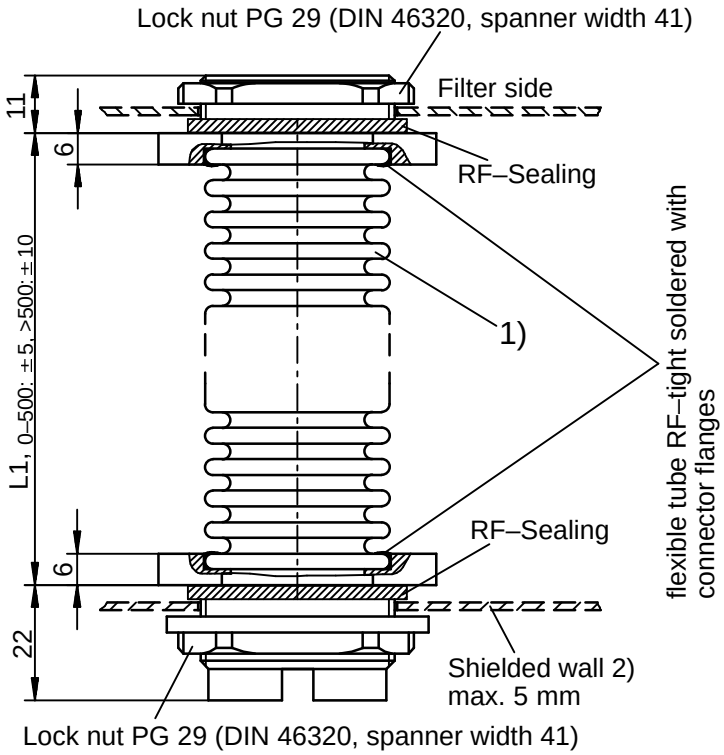

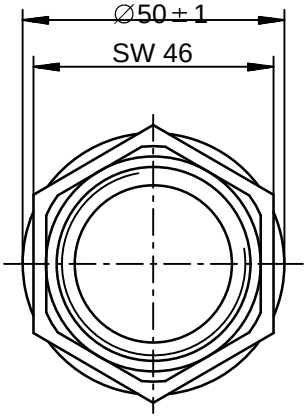

1) Min. bending radius 60 mm
2) Hole in der Shielding wall $\varnothing 37^{+0.5}$, $\varnothing 55^{+5}$ metallic bare

Complete ordering code with the length L1:
At length **98 cm** the complete ordering code is B84298A0042**L098**

Lengths in following steps available:

6 cm	to	100 cm	in 2 cm steps
100 cm	to	400 cm	in 5 cm steps
400 cm	to	600 cm	in 10 cm steps
600 cm	to	980 cm	in 20 cm steps

Please Note:
After removing the flexible conduit insert new RF–Sealings!
Ordering code of a set with 2 RF–sealings is B84298M0029C901

The information describes the type of filter and shall not be considered as assured characteristics. terms of delivery and rights to change design resered.