EMC Filters for Shielded Rooms

Series/Type: **B84312*B*, B84312*H***

The following products presented in this data sheet are being withdrawn.

Ordering Code	Substitute Product	Date of Withdrawal	Deadline Last Orders	Last Shipments
B84312F0020B103		2023-04-14	2023-07-28	2023-10-27
B84312F0020B003		2023-04-14	2023-07-28	2023-10-27
B84312C0020H103		2023-04-14	2023-07-28	2023-10-27

Ordering Code	Substitute Product	Date of Withdrawal	Deadline Last Orders	Last Shipments
B84312C0020H003		2023-04-14	2023-07-28	2023-10-27
B84312C0020B103		2023-04-14	2023-07-28	2023-10-27
B84312C0020B003		2023-04-14	2023-07-28	2023-10-27

Please contact your nearest TDK sales office if you need support in selecting a suitable substitute. The addresses of our worldwide sales network are presented at www.tdk-electronics.tdk.com/sales.

Passband up to 300 kHz
Stopband attenuation up to 40 GHz



Features

- Use of coaxial feed-through capacitors on input and output
- Single or current-balanced chokes depending on requirement
- Insertion loss to CISPR 17
- Also available with integrated EMP protection

Installation

Single filters are attached directly to the shielding wall. Larger numbers can be housed in filter cabinets or boxes. Various models and the matching flexible connector fittings are available.

Mechanical design

The electrical components are incorporated in an RF-tight case of tin-plated sheet steel. Filters are available for 2 or 20 lines and for upright or flat installation on shielding wall.

Model	Installation		Filter selection
B84312**C**	Upright	Space-saving solution for installing a number of different filters.	B84312C***B** (2-line) B84312C***H** (20-line)
B84312**F**	Flat	Low profile and thus advantage especially for just one or a few filters.	B84312F***B** (2-line)

Filter applications

The following standard filters are designed for the most common applications; customized models can be produced for differing requirements.

Passband kHz	Z_L Ω	I_R A	Application	Circuit diagram	No. of lines	Series B84312
DC ... 3.4	600	0.1	Standard filters for telephone systems	1	2 20	+0020B*** C0020H***
DC ... 3.4	600	0.1	Telephone systems for enhanced requirements (stopband attenuation of 100 dB above 10 kHz)	3	2 20	+0090B*** C0090H***
DC ... 50	600	0.1	Filters for telephone systems and modem cables, conditionally for control lines with critical signal rise times	1	2 20	+0040B*** C0040H***
DC ...120	150	0.1	Data signals with balanced signal transmission mode as used by modems or interfaces RS 485 up to 9600 Baud and/or RS 422 up to 19200 Baud	2	2 20	+0050B*** C0050H***
DC ... 300	150	0.1		2	2 20	+0060B*** C0060H***
DC ... 120	100	2	Smoke detectors with serial data transmission in bus systems and remote power feeding, temperature switches, 24 V emergency lighting, DC motors	2	2 20	+0050B*** C0050H***
–	–	3	24-V emergency lighting, DC motors, signal and control lines	2	2 20	+0050B*** C0050H***
–	–	1	Universal filters for signal and control lines with up to 1 A	1	2 20	+0030B*** C0030H***
–	–	1	Control lines with up to 1 A and enhanced attenuation requirements	3	2 20	+0100B*** C0100H***

+: C = upright installation, F = flat installation

Circuit diagrams

The diagrams each show a circuit of a 2-line filter.
In the series of 20-line filters there are 10 of them in each case.

Circuit diagram 1

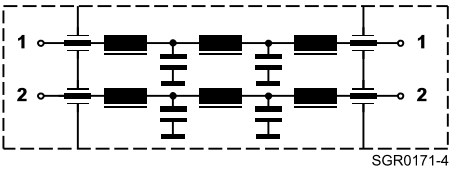

Circuit diagram 2

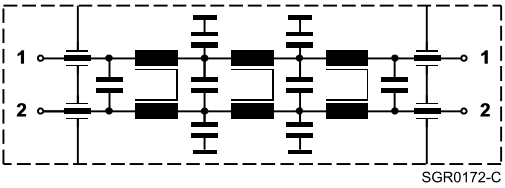

Circuit diagram 3

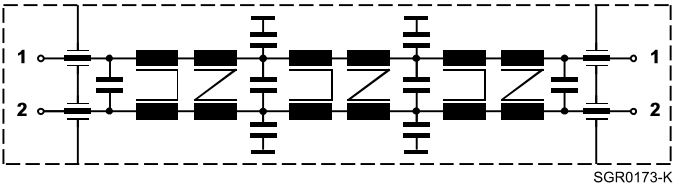

Note on circuit diagrams 2 and 3:

These filters are mounted with current-compensated chokes. Make sure that the forward and return line are routed paired through one filter.

General technical data

Rated voltage	$V_{R,AC}$	100	V	
Rated voltage	$V_{R,DC}$	100	V	
Rated frequency	f_R			Pass bandwidth at Z_L
Rated current	I_R	See characteristics		T_A = 40 °C
Line impedance	Z_L	See characteristics		
Test voltage	V_{test}	250 VDC, 2 s 250 VDC, 2 s		Line/line Line/case
Maximum DC resistance	R_{max}	See characteristics		Per line
Permissible ambient temperature	T_A	−25/+40	°C	
Climatic category (EN 60068-1)		25/085/56		−25 °C/+85 °C/56 days damp heat test
Weight		560 4.5	g kg	2-line filters 20-line filters
Mechanical version		C		Upright for 2- and 20-line filters
		F		Flat for 2-line filters
Filters with EMP protection:				
Nominal DC spark-over voltage	V_{sdcN}	<500	V	Per line
Surge response voltage		<800 <800	V V	At 1 kV/µs At 1 kV/ns
Nominal surge current (8/20 µs)		5/10	kA	
Suppression condition		$I \leq I_R$		

Maximum voltage on filter output for filters with EMP protection

Series	B84312	...0020+1** ...0090+1**	...0030+1** ...0100+1**	...0040+1**	...0050+1**	...0060+1**
Pulse shape in symmetrical circuit						
dv/dt = 0.1	kV/µs	2 V	360 V	8 V	3 V	12 V
dv/dt = 1	kV/µs	1 V	60 V	3 V	2 V	9 V
dv/dt = 1	kV/ns[1)]	0.5 V	2 V	0.5 V	0.5 V	1.2 V
Nominal surge current (8/20 µs)		5 V	290 V	12 V	10 V	12 V
Pulse shape in unsymmetrical circuit						
dv/dt = 0.1	kV/µs	50 V	700 V	250 V	120 V	280 V
dv/dt = 1	kV/µs	35 V	130 V	60 V	25 V	30 V
dv/dt = 1	kV/ns[1)]	1 V	5 V	3 V	1 V	1 V
Nominal surge current (8/20 µs)		20 V	200 V	110 V	25 V	50 V

1) Typical test pulse: rise time 10 ns, time to half value 1500 ns, charge voltage min. 50 kV, source impedance 90 Ω

Characteristics and ordering codes

I_R A	Pass bandwidth kHz	Z_L Ω	R_{max} Per line Ω	Circuit diagram	Number of lines	Ordering code
0.1	DC ... 3.4	600	11	1	2	B84312C0020B*03
0.1	DC ... 3.4	600	11	1	2	B84312F0020B*03
0.1	DC ... 3.4	600	11	1	20	B84312C0020H*03
1	—[2]	[3]	0.4	1	2	B84312C0030B*03
1	—[2]	[3]	0.4	1	2	B84312F0030B*03
1	—[2]	[3]	0.4	1	20	B84312C0030H*03
0.1	DC ... 50	600	1.1	1	2	B84312C0040B*01
0.1	DC ... 50	600	1.1	1	2	B84312F0040B*01
0.1	DC ... 50	600	1.1	1	20	B84312C0040H*01
0.1	DC ... 120	150	4.4	2	2	B84312C0050B*01
0.1	DC ... 120	150	4.4	2	2	B84312F0050B*01
0.1	DC ... 120	150	4.4	2	20	B84312C0050H*01
2	DC ... 120	100	0.4	2	2	B84312C0050B*21
2	DC ... 120	100	0.4	2	2	B84312F0050B*21
2	DC ... 120	100	0.4	2	20	B84312C0050H*21
3	—[2]	[3]	0.2	2	2	B84312C0050B*31
3	—[2]	[3]	0.2	2	2	B84312F0050B*31
3	—[2]	[3]	0.2	2	20	B84312C0050H*31
0.1	DC ... 300	150	1.0	2	2	B84312C0060B*01
0.1	DC ... 300	150	1.0	2	2	B84312F0060B*01
0.1	DC ... 3.4	600	17	3	2	B84312C0090B*04
0.1	DC ... 3.4	600	17	3	2	B84312F0090B*04
0.1	DC ... 3.4	600	17	3	20	B84312C0090H*04
1	—[2]	[3]	0.6	3	2	B84312C0100B*03
1	—[2]	[3]	0.6	3	2	B84312F0100B*03
1	—[2]	[3]	0.6	3	20	B84312C0100H*03

*: 0 = Standard filters
1 = Filters with EMP protection

2) Control line filters, not matched
3) Not specified

Insertion loss α_e in passband (typical)

Measurement circuit

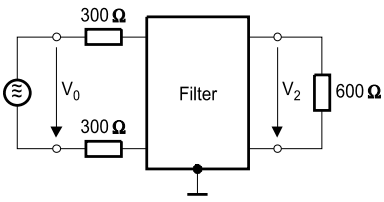

Symmetrical measurement circuit
with Z_L = 600 Ω

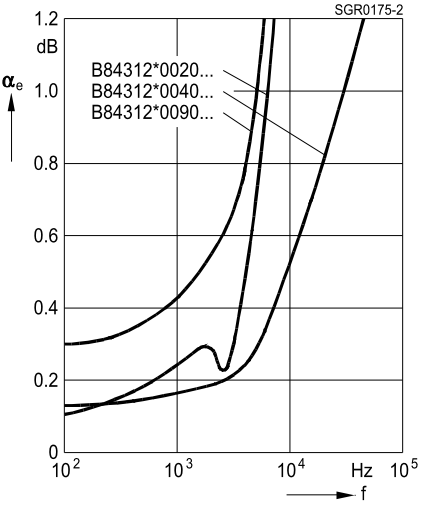

Measurement circuit

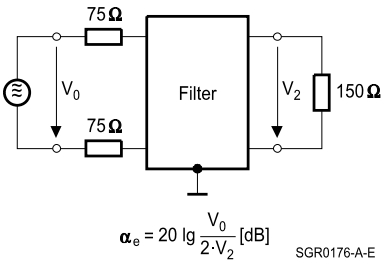

Symmetrical measurement circuit
with Z_L = 150 Ω

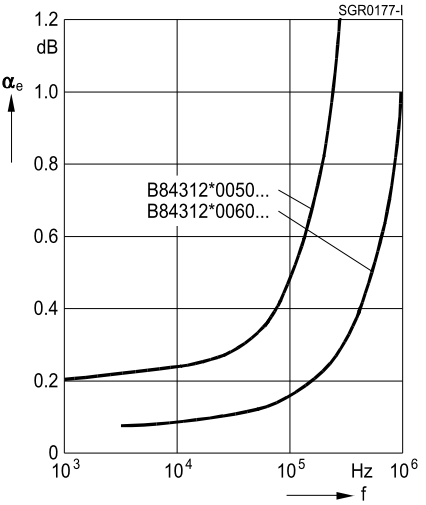

Unsymmetrical measurement (common-mode-rejection) in passband

Measurement circuit

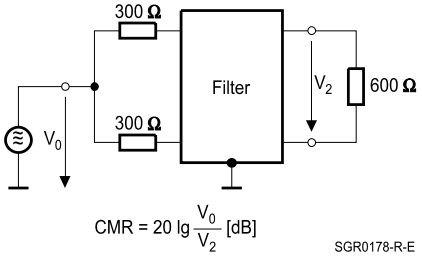

Filter with Z_L = 600 Ω

CMR >40 dB in passband

Insertion loss α_e in stopband (typical)

Measurement circuit

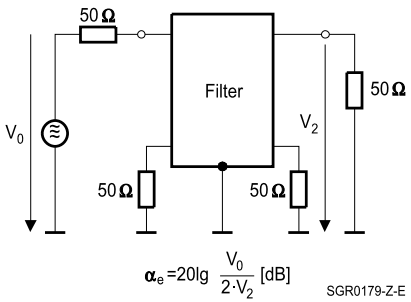

Unsymmetrical measurement circuit

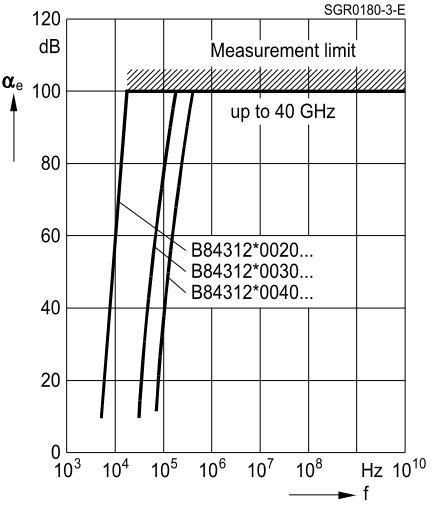

Measurement circuit

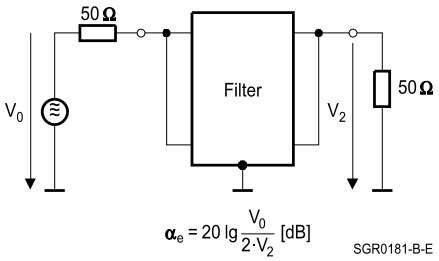

Asymmetrical measurement
to MIL-STD-220A

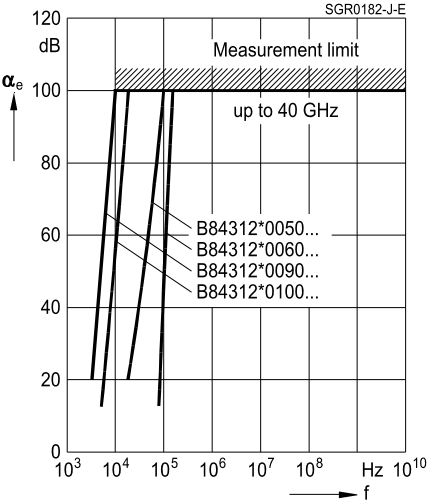

Dimensional drawings

2-line filters, upright installation

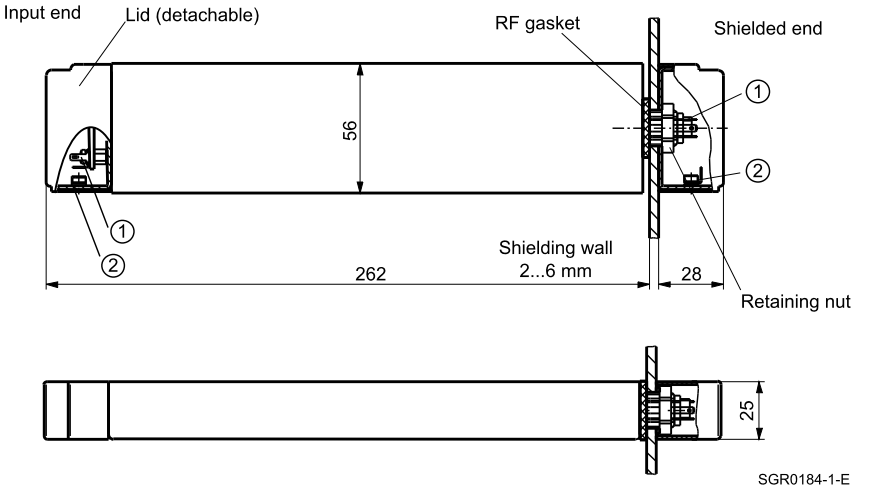

① Line connections at both ends:
2 x tab connectors for receptacle 2.8 x 0.5 (in accessory bag)

② Strain relief with ground connection for cable diameter 4.5 ... 6 mm

Hole for installation in shielding wall

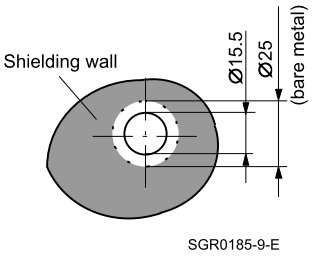

2-line filters, flat installation

Side view

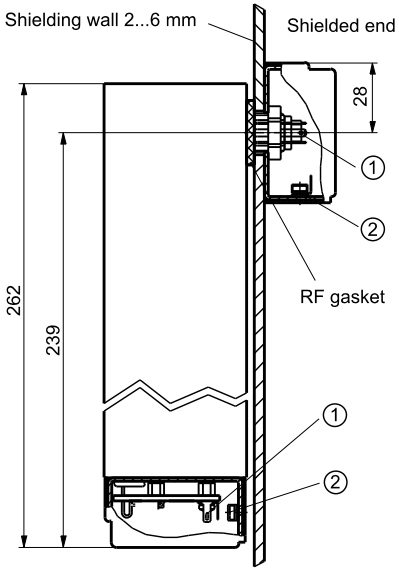

Plan view

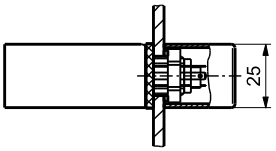

SGR0186-H-E

① Line connections at both ends:
2 x tab connectors for receptacle 2.8 x 0.5 (in accessory bag)

② Strain relief with ground connection for cable diameter 4.5 ... 6 mm

Hole for installation in shielding wall

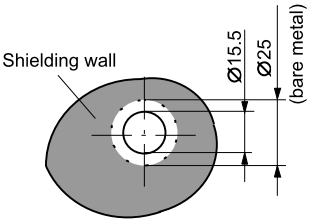

SGR0185-9-E

20-line filters, upright installation

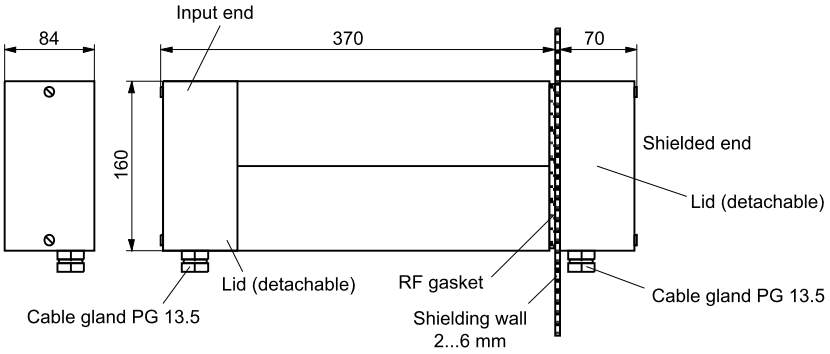

SGR0187-Q-E

Hole for installation in shielding wall

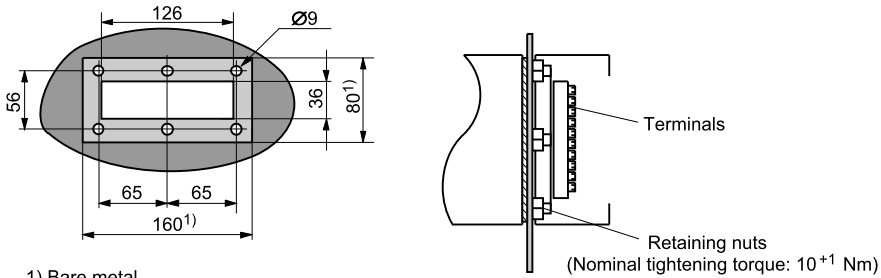

1) Bare metal

SGR0188-Y-E

Adapter

A bracket adapter is available for flat installation on the shielding wall.
Ordering code: B84298M0012C004

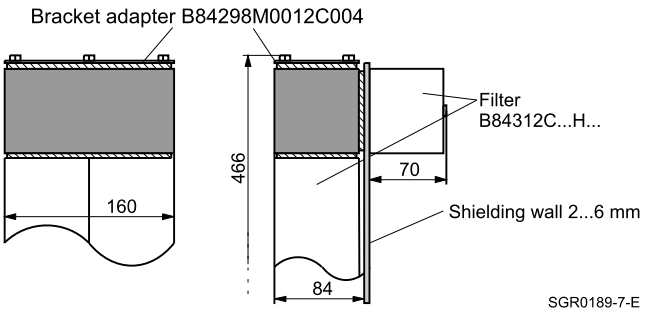

SGR0189-7-E

Important notes

The following applies to all products named in this publication:

1. Some parts of this publication contain **statements about the suitability of our products for certain areas of application**. These statements are based on our knowledge of typical requirements that are often placed on our products in the areas of application concerned. We nevertheless expressly point out **that such statements cannot be regarded as binding statements about the suitability of our products for a particular customer application.** As a rule we are either unfamiliar with individual customer applications or less familiar with them than the customers themselves. For these reasons, it is always ultimately incumbent on the customer to check and decide whether a product with the properties described in the product specification is suitable for use in a particular customer application.

2. We also point out that **in individual cases, a malfunction of electronic components or failure before the end of their usual service life cannot be completely ruled out in the current state of the art, even if they are operated as specified.** In customer applications requiring a very high level of operational safety and especially in customer applications in which the malfunction or failure of an electronic component could endanger human life or health (e.g. in accident prevention or life-saving systems), it must therefore be ensured by means of suitable design of the customer application or other action taken by the customer (e.g. installation of protective circuitry or redundancy) that no injury or damage is sustained by third parties in the event of malfunction or failure of an electronic component.

3. **The warnings, cautions and product-specific notes must be observed.**

4. In order to satisfy certain technical requirements, **some of the products described in this publication may contain substances subject to restrictions in certain jurisdictions (e.g. because they are classed as hazardous)**. Useful information on this will be found in our Material Data Sheets on the Internet (www.tdk-electronics.tdk.com/material). Should you have any more detailed questions, please contact our sales offices.

5. We constantly strive to improve our products. Consequently, **the products described in this publication may change from time to time**. The same is true of the corresponding product specifications. Please check therefore to what extent product descriptions and specifications contained in this publication are still applicable before or when you place an order.

   We also **reserve the right to discontinue production and delivery of products**. Consequently, we cannot guarantee that all products named in this publication will always be available. The aforementioned does not apply in the case of individual agreements deviating from the foregoing for customer-specific products.

6. Unless otherwise agreed in individual contracts, **all orders are subject to our General Terms and Conditions of Supply.**

7. **Our manufacturing sites serving the automotive business apply the IATF 16949 standard.** The IATF certifications confirm our compliance with requirements regarding the quality management system in the automotive industry. Referring to customer requirements and customer specific requirements ("CSR") TDK always has and will continue to have the policy of respecting individual agreements. Even if IATF 16949 may appear to support the acceptance of unilateral requirements, we hereby like to emphasize that **only requirements mutually agreed upon can and will be implemented in our Quality Management System.** For clarification purposes we like to point out that obligations from IATF 16949 shall only become legally binding if individually agreed upon.

8. The trade names EPCOS, CeraCharge, CeraDiode, CeraLink, CeraPad, CeraPlas, CSMP, CTVS, DeltaCap, DigiSiMic, ExoCore, FilterCap, FormFit, LeaXield, MiniBlue, MiniCell, MKD, MKK, MotorCap, PCC, PhaseCap, PhaseCube, PhaseMod, PhiCap, PowerHap, PQSine, PQvar, SIFERRIT, SIFI, SIKOREL, SilverCap, SIMDAD, SiMic, SIMID, SineFormer, SIOV, ThermoFuse, WindCap are **trademarks registered or pending** in Europe and in other countries. Further information will be found on the Internet at www.tdk-electronics.tdk.com/trademarks.

Release 2018-10